PCT WORLD INTELLECTUAL PROPERTY ORGANIZATION
International Bureau

INTERNATIONAL APPLICATION PUBLISHED UNDER THE PATENT COOPERATION TREATY (PCT)

(51) International Patent Classification 6 :
H01R 9/26, 25/14

A1

(11) International Publication Number: **WO 96/30968**

(43) International Publication Date: 3 October 1996 (03.10.96)

(21) International Application Number: PCT/US96/04259

(22) International Filing Date: 28 March 1996 (28.03.96)

(30) Priority Data:
08/414,883 31 March 1995 (31.03.95) US

(71) Applicant: THE WHITAKER CORPORATION [US/US]; Suite 450, 4550 New Linden Hill Road, Wilmington, DE 19808 (US).

(72) Inventors: DOUTY, George, Harold; R.R. 3, Box 1066, Mifflintown, PA 17059 (US). LANDIS, John, Michael; 109 Fineview Road, Camp Hill, PA 17011 (US). WEIDLER, Charles, Harry; 926 First Street, Lancaster, PA 19603 (US).

(74) Agents: NESS, Anton, P. et al.; The Whitaker Corporation, Suite 450, 4550 New Linden Hill Road, Wilmington, DE 19808 (US).

(81) Designated States: CN, JP, KR, SG, European patent (AT, BE, CH, DE, DK, ES, FI, FR, GB, GR, IE, IT, LU, MC, NL, PT, SE).

Published
With international search report.
Before the expiration of the time limit for amending the claims and to be republished in the event of the receipt of amendments.

(54) Title: CONNECTOR FOR CONNECTION TO A RAIL

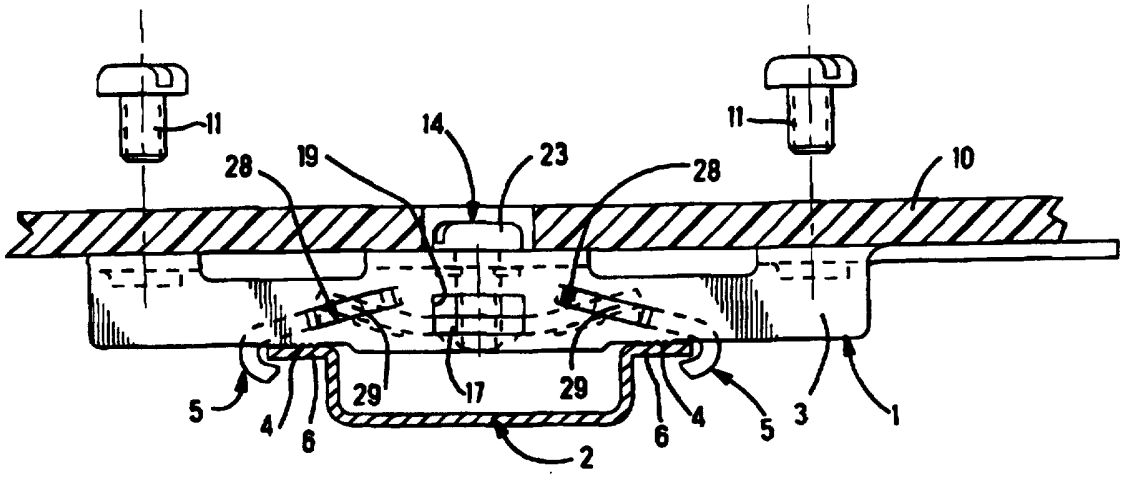

(57) Abstract

An electrical connector (1, 100) for a DIN rail (2) with rail flanges (6), including a body (3, 102), a carrier (16, 104) vertically movable with respect to the body (3, 102), an actuator (14, 110) and a pair of clamp members (5, 106, 108) having rail-engageable hook portions (26, 148). At least one of the clamp members (5, 106, 108) is movable toward the other by the carrier (16, 104) upon actuation for mechanically and electrically clamping onto a respective rail flange (6). A pair of such clamp members (5) may be cammed inwardly and upwardly along slots (30) in side walls (9) of body (3) upon actuation, or the clamp members (106, 108) may include flanges (158) pivotably held in body side wall holes (162) for rotating the hook portions (148) inwardly and upwardly against the rail flanges (6). Such connector (1, 100) is adapted to be mounted beneath a circuit board (10) prior to being clamped onto the DIN rail (2).

FOR THE PURPOSES OF INFORMATION ONLY

Codes used to identify States party to the PCT on the front pages of pamphlets publishing international applications under the PCT.

AM	Armenia
AT	Austria
AU	Australia
BB	Barbados
BE	Belgium
BF	Burkina Faso
BG	Bulgaria
BJ	Benin
BR	Brazil
BY	Belarus
CA	Canada
CF	Central African Republic
CG	Congo
CH	Switzerland
CI	Côte d'Ivoire
CM	Cameroon
CN	China
CS	Czechoslovakia
CZ	Czech Republic
DE	Germany
DK	Denmark
EE	Estonia
ES	Spain
FI	Finland
FR	France
GA	Gabon
GB	United Kingdom
GE	Georgia
GN	Guinea
GR	Greece
HU	Hungary
IE	Ireland
IT	Italy
JP	Japan
KE	Kenya
KG	Kyrgystan
KP	Democratic People's Republic of Korea
KR	Republic of Korea
KZ	Kazakhstan
LI	Liechtenstein
LK	Sri Lanka
LR	Liberia
LT	Lithuania
LU	Luxembourg
LV	Latvia
MC	Monaco
MD	Republic of Moldova
MG	Madagascar
ML	Mali
MN	Mongolia
MR	Mauritania
MW	Malawi
MX	Mexico
NE	Niger
NL	Netherlands
NO	Norway
NZ	New Zealand
PL	Poland
PT	Portugal
RO	Romania
RU	Russian Federation
SD	Sudan
SE	Sweden
SG	Singapore
SI	Slovenia
SK	Slovakia
SN	Senegal
SZ	Swaziland
TD	Chad
TG	Togo
TJ	Tajikistan
TT	Trinidad and Tobago
UA	Ukraine
UG	Uganda
US	United States of America
UZ	Uzbekistan
VN	Viet Nam

CONNECTOR FOR CONNECTION TO A RAIL

The invention relates generally to electrical connectors and more particularly to connectors for connection to a rail.

Various types of connectors have been devised for being secured to a DIN or top hat rail, that is an elongated conductive channel shaped member having side edge flange portions therealong to which connector engagement is made. In US-A-5,174,767 is disclosed an assembly for connecting a ground conductor to a DIN (or top hat) rail. The assembly includes a first sheet metal member arranged for seated engagement transversely atop the rail flanges, a second sheet metal member including at each end a hook portion to extend beneath the rail flanges, and a screw through aligned apertures of both members for moving the second member upwardly relative to the first member upon screw rotation, thereby clamping the hook portions against the bottom surfaces of the rail flanges. The assembly also includes a guide arrangement for guiding the relative movement of the two members in a vertical direction. The pair of hook portions are fixed in their relative positions by being integral with the second member, and the connector is easily assembled to the DIN rail by being manipulated while being directly observed by the service personnel performing the assembly, to bring one hook member beneath an associated rail flange and then the other hook member beneath the other rail flange, followed by being tightened against the respective rail flanges upon rotation of the screw.

It is desired to provide a connector that is securable to a DIN rail while being affixed beneath a large module that prevents manipulation of the connector during rail securement and also visual observation of the securing procedure, all in a manner to result in assuredly clamping the connector to the DIN rail while permitting intentional connector removal from the DIN

rail and yet preventing inadvertent disengagement therefrom.

The present invention provides assured clamping and electrical connection utilizing a connector assembly having clamps that are movable with respect to each other to hook onto and be released from the DIN rail flanges by actuation and deactuation of an actuation mechanism.

The present invention is a connector for establishing a mechanical and electrical connection to flanges of an elongated DIN rail by clamps of the connector that are relatively movable toward and away from each other to establish or release a clamping and grounding connection. At least one and preferably both of the clamps of the connector are incrementally movable with respect to the connector and provide respective hooks whose positions are movable from outward positions permitting being placed to both sides of the DIN rail flanges, relatively toward each other to become engageable with and under respective rail side edges upon actuation of an actuator, such as a screw.

In a further aspect, the present connector is adapted to be mounted beneath another article such as a module or a circuit board at the time it is to be clamped onto the DIN rail, with the actuator being actuatable along a rail-remote surface of the connector. In a first embodiment, upon actuation both clamps are urged inwardly and upwardly along camming slots of a body member, with the rail engaging hooks correspondingly moving inwardly and upwardly into clamping engagement with the rail side edges. In a second embodiment, the clamps are pivoted upon actuation to rotate the hooks into rail engagement.

Preferably the connector includes a carrier member movable with respect to the body and at least one of the clamp members upon actuation. Further, it is preferred that the clamp members be rigid and nondeflectable.

Embodiments of the present invention will now be described by way of example with reference to the accompanying drawings, in which:

FIGURES 1 and 2 are section views of a first embodiment of the connector of the present invention being secured beneath a circuit board and to a DIN rail;

FIGURES 3 to 6 are top, section side and end views of a bracket of the connector of FIGS. 1 and 2, with FIG. 4 taken along lines 4-4 of FIG. 3;

FIGURES 7 to 9 are top, section and side views of a jaw of the connector of FIGS. 1 and 2;

FIGURES 10 to 12 are top, side and end views of a lifting cam of the connector of FIGS. 1 and 2;

FIGURE 13 is an isometric view of a second embodiment of the present invention poised above a DIN rail to be mounted thereto;

FIGURE 14 is an exploded isometric view of the components of the connector of FIG. 13;

FIGURE 15 is a longitudinal section view of the connector of FIGS. 13 and 14 poised above the DIN rail and being assembled beneath a substrate; and

FIGURE 16 is a longitudinal section view of the connector of FIGS. 13 to 15 after assembly to the substrate and mounted to the DIN rail.

In FIGS. 1 to 12 is illustrated a first embodiment of the DIN rail connector of the present invention, with a second embodiment shown in FIGS. 13 to 16.

With reference to FIGS. 1 and 2, an electrical connector 1 for a DIN rail 2 comprises a body or bracket 3, at least one rail engaging portion 4 on bracket 3 facing downwardly toward DIN rail 2, and at least one movable clamp or jaw 5 to clamp the DIN rail against the rail engaging portion 4. In the drawings, two jaws 5 are shown. The connector 1 is for the purpose of connection electrically to the elongated, metal DIN rail 2 of known construction. For example, the DIN rail 2 is

channel shaped, and exterior straight flanges or sides 6 are provided on edges along DIN rail 2.

With reference to FIGS. 3 to 6, bracket 3 is of unitary construction, stamped and formed from a metal plate having a thickness. The bracket 3 has an inverted channel 7 with a discontinuous bottom 8 on channel 7, and with opposite sides 9 on channel 7 being side walls that extend from bottom 8. Bottom 8 provides an exterior upwardly facing rail-remote mounting surface on connector 1. The connector is especially useful to be mounted and connected electrically to another device, for example, a substrate such as a circuit board 10 (FIGS. 1 and 2) by a pair of mounting screws 11. Screws 11 are threadedly attached in internally threaded openings 12 through bottom 8 on channel 7. Indented embossments 20 encircle each opening 12, and each of the threaded openings extends through a corresponding collar 13 projecting out of the thickness of the bottom. Each collar 13 is created by drawing the collar outward from the thickness of the channel bottom. With screws 11 in engagement with ground circuits of the circuit board, a ground connection is defined with the connector.

Rail engaging portions 4 are on edges along the opposite sides 9 of channel 7, and are serrations to concentrate forces applied to the surface of the rail 2 to penetrate and break oxides on the surfaces of rail flanges 6 and establish excellent electrical grounding connection with DIN rail 2. Rail engaging portions 4 face downwardly to engage the opposite sides of the DIN rail.

With reference again to FIGS. 1 and 2, an actuator such as threaded drive screw 14 extends rotatably through an opening 15 through the bracket 3, and preferably is threaded for clockwise rotation to attain clamping. Drive screw 14 is positioned between the respective rail engaging portions 4. With reference to FIGS. 10 to 12, a carrier or lifting cam 16 threadably

receives drive screw 14 for relative rotation. Lifting cam 16 draws each jaw 5 toward the rail engaging portion 4 upon rotation of the drive screw. A second rail engaging portion 4 on bracket 3 faces toward the DIN rail, a second movable jaw 5 is movable toward the rail engaging portion to clamp the DIN rail against the second rail engaging portion 4, and the lifting cam 16 biases both jaws 5 for movement toward respective rail engaging portions 4 upon rotation of the drive screw 14.

The lifting cam is of unitary construction stamped and formed form a plate of metal having a thickness plane. A pair of tabs 17 project in the thickness plane of a central portion 18, and project in opposite directions from opposite extending edges of lifting cam 16. The tabs span the width of respective vertical windows or slots 19 through the opposite sides 9 of channel 7 and are captured in slots 19 for vertical movement when drive screw 14 is rotated; sides 9 prevent any rotation of lifting cam 16 during actuation and deactuation. A threaded opening 21 in central portion 18 of lifting cam 16 threadably receives the drive screw, and upon clockwise rotation of drive screw 14, lifting cam 16 is drawn inwardly along drive screw 14 toward the screw head 23. Drive screw 14 lifts lifting cam 16 further into the interior of channel 7. Threaded opening 21 extends through a corresponding collar 24 (FIG. 11) projecting out of the thickness of the lifting cam 16. Collar 24 is created by drawing the collar 24 outwardly from the thickness of the lifting cam. Upwardly projecting arms 25 extend diagonally from the central portion 18 of lifting cam 16 to engage respective jaws 5.

With reference to FIGS. 7 to 9, each jaw 5 is of unitary construction, stamped and formed from a metal plate having a thickness. Each jaw 5 is turned back on itself at one end to provide a hook 26 at the one end. The hook 26 extends downwardly and faces inwardly toward

a corresponding side 6 of DIN rail 2 (FIGS. 1 and 2). The remainder of each jaw 5 is straight. A slot 27 is rectangular in shape, and extends through the remainder of jaw 5. Arms 25 of lifting cam 16 are received in respective slots 27 through jaws 5, whereby the lifting cam 16 engages respective jaws 5 and biases them for movement toward the rail engaging portions 4 along respective inclined tracks 28, (FIGS. 1 and 2), upon rotation of drive screw 14.

On each jaw 5, a pair of projecting tabs 29 project in the thickness plane of each remainder. The bracket 3 provides the inclined tracks 28 that extend along the bracket. Each track 28 is in the form of inclined camming slots 30 (FIG. 5) through opposite sides 9 of channel 7. Camming slots 30 on the same side 9 have identical vertical positions and have closed ends, and camming slots 30 through opposite sides 9 of channel 7 are aligned with each other. Each jaw is received in the interior of the channel 7, between opposite sides 9 of channel 7. Flanges or tabs 29 on each jaw are movable by being slidable in and along the respective inclined camming slots 30 through opposite sides 9 of channel 7. The tabs are not pivotable in the slots, and this keeps the jaws from closing toward each other through pivoting, while moving gradually toward each other through translation. Optionally, the slots 30 may be horizontal if the rail-engaging surfaces of the jaws were inclined, such that movement of each jaw toward the associated rail edge assures that the edge will eventually engage the inclined jaw surface for clamping.

Jaw 5 is movable in a resultant direction along respective inclined tracks 28 to clamp the DIN rail 2 against the rail engaging portions 4, and the resultant direction extends both laterally of each of the rail engaging portions 4 and toward each of the rail engaging portions 4.

An advantage of the invention is that downward projecting hooks 26 are drawn toward opposite sides 6 on the DIN rail, whereby connector 1 is adjustable for connection to different sizes, widths and thicknesses, of DIN rails 2. Another advantage resides in a lifting cam 16 driven by a drive screw 14 having right hand threads to draw downward projecting hooks 26 toward opposite sides 6 on the DIN rail, and the hooks are drawn toward rail engaging portions 4 on a bracket that project downwardly to engage and clamp on the opposite sides 6 of the DIN rail.

Referring now to FIGS. 13 to 16, connector 100 includes a body 102, a carrier 104, a pair of clamps 106,108 and an actuator 110. Body 102 includes a planar top or rail-remote surface 112 and side walls 114,116 with top surface 112 defined by a central top wall portion 118 and spaced-apart outer top wall portions 120,122. Central top wall portion 118 includes an actuator-receiving aperture 124 therethrough while outer top wall portions 120,122 include respective fastener-receiving apertures 126,128 therethrough, all similar to connector 1 of FIGS. 1 to 12.

Carrier 104 is positioned beneath central top wall portion 118 and includes a threaded actuator-receiving hole 130 aligned with actuator-receiving aperture 124. Carrier 104 is secured to body 102 by tabs 132 extending from side edges 134 held in windows 136 through side walls 114,116 located centrally therealong, with windows 136 being shaped and dimensioned to permit tabs 132 to be movable vertically therewithin such that carrier 104 is movable vertically with respect to body 102. Side walls 114,116 prevent any rotation of carrier 104 with respect to body 102 during actuation and deactuation.

Ends 138 of carrier 104 include respective pairs of upturned flanges 140 at the corners, with the flanges of each pair being spaced apart by slots 142. Upper ends 144 of flanges 140 of each pair define projections 146

extending toward each other to at least partially close slots 142. Each clamp member 106,108 includes a U-shaped DIN rail hook portion 148 extending from a planar body portion 150, with hook portion 148 preferably including one or more teeth 152 along free edge 154 such as at the ends thereof and optionally centrally therealong as well to establish an assured ground connection with the DIN rail upon actuation of the clamp assembly.

Planar body portion 150 includes a carrier-engageable portion or tongue 156 adapted to be inserted through a respective slot 142 of carrier 104 and sufficiently wide to be held beneath projections 146, while the height of the slot is enough to permit the tongue to move between a limited range of angular orientations beneath projections 146 between fully actuated and fully deactuated positions of said clamp members 106,108. A pair of flanges 158 extend from side edges 160 of planar body portion 150 adapted to be received into and trapped within corresponding circular holes 162 in side walls 114,116 of body 102, and are preferably dimensioned just small enough to be movable in holes 162 to permit rotation therewithin.

A clamp assembly 100 is defined when flanges 158 of clamps 106,108 are inserted into holes 162 in the body side walls 114,116 and tongues 156 are disposed in slots 142 of carrier 104 beneath projections 146 and tabs 132 are disposed in windows 136, all without the utilization of discrete fasteners and in a manner permitting certain limited movement of the carrier, clamps and body with respect to each other as will now be explained.

As seen in FIG. 13, large head 166 of actuator 110 projects upwardly of central top wall portion 118 of body 102, after the threaded shank has been inserted through body 102; the actuator is secured to body 102 such as by use of an E-ring 168 beneath central top wall portion 118 seated within an annular groove of actuator

110. Threaded shank 164 is threaded into threaded actuator-receiving hole 130 of carrier 104 (FIGS. 14 to 16), and tabs 132 of carrier 104 are seated loosely within windows 136 of side walls 114,116 of carrier 102. Clamps 106,108 are affixed to the connector with tongues 156 extending toward each other through respective slots 142 between pairs of flanges 140 of carrier 104, and flanges 158 are inserted into openings 162 in side walls 114,116 of body 102.

Referring now to FIGS. 15 and 16, with carrier 104 in its lowermost position, clamps 106,108 are generally oriented parallel to carrier 104 so that hooks 148 are at their farthest apart position. As actuator 110 is rotated in a first direction, carrier 104 is raised with respect to body 102, tabs 132 rise within windows 136 constraining carrier to be centered with respect to body 102; tongues 156 of clamps 106,108 are moved upwardly by carrier 104 and the clamps are pivoted about flanges 158 that remain within holes 162; hooks 148 are rotated inwardly toward each other with teeth 152 moving upwardly.

Connector 100 is clamped to DIN rail 2 by being lowered thereonto when hooks 148 of clamps 106,108 are in their farthest apart position to be moved past rail flanges 6. Upon actuation of actuator 110, clamps 106,108 are pivoted so that the hooks thereof are rotated inwardly beneath rail flanges 6 and upwardly until teeth 152 bite into the bottom surfaces of the rail flanges to establish a firm mechanical clamping thereto urging the rail flanges against the bottom edges of side walls 114, 116 of body 102 which preferably have serrations 170 therealong, all thereby establishing an assured electrical grounding connection therewith by penetrating any surface oxide layers on the DIN rail flanges 6.

A substantial advantage of the connectors 1,100 of the present invention is that the connectors are adapted

to be mounted beneath a circuit board 10 such as by screws 11 that mechanically affix the connectors to the circuit board and also establish an assured electrical connection between ground circuits of the circuit board and the connectors by reason of threaded holes 12,126,128 (FIGS. 2, 3, 13 and 15). The connectors are mounted in a stable orientation against the bottom surface of the circuit boards by reason of the planar top surfaces 8,112 (see FIGS. 5 and 13) abutting the bottom surface at a plurality of locations spaced apart in several directions across the surface.

Such an arrangement permits the circuit boards to be themselves affixed along bases of large modules (such as module 180 of FIG. 16), where the entire assembly 180,10,100) is manipulated as a unit to be easily secured onto a DIN rail 2, such as by use of a tool such as screwdriver 190 or a hex socket wrench utilized to rotate actuator 110 with its work end inserted through an aperture 182 through module 180 and into a hole 184 of the circuit board containing large head 166 of actuator 110. It can be seen the entire assembly is easily removable from the DIN rail by rotation of actuator 110 in the reverse direction, such as counterclockwise. Further, affixing of the entire assembly to a DIN rail can easily be accomplished when the assembly is being positioned between adjacent ones of such modules already in position, where mounting to the DIN rail cannot be visually observed, where access to the DIN rail is inhibited, and even where only strict orthogonal movement of the assembly is possible toward and away from the DIN rail.

Another advantage of the present invention is that the clamping arrangement contains clamps that are rigid and that are not resilient nor deflectable when subjected to stress, thereby assuring not only continued grounding connection to the DIN rail to counteract any vibration effects, but also to remain assuredly mounted

onto the DIN rail resisting inadvertent disengagement but permitting and facilitating desired removal therefrom. Substantial clamping forces are obtainable with the present connector, to the extent of passing a physical shock test in accordance with IEC Specification 68-2-27 wherein shocks were sustained having an acceleration amplitude of 15 gravity units (15 g's), with the connector having been applied to a DIN rail at a torque of about thirty inch-pounds.

Even with rigid, nondeflectable clamps, both embodiments of the present invention provide for adjustment of the spacing between the hooks of the clamps to compensate for variations in distance between edges of the rail flanges, and they also compensate for variations in thickness of the rail flanges, within ranges typical of manufacturing tolerances for the DIN rail.

WHAT IS CLAIMED IS:

1. An electrical connector (1,100) for being mounted and electrically connected to a DIN rail (2), the DIN rail (2) being of the type comprising an elongate channel having opposed coplanar flanges (6) along sides thereof, and the connector (1,100) being conductive and having a body (3,102) and a pair of hooks (26,148) movable relatively together upon actuation of an actuator (14,110) to clamp onto the rail flanges (6), characterized in that:

at least one of said hooks (26,148) is defined on a clamp member (5,106,108) that is movable with respect to said body (3,102) upon actuation toward the other of said hooks (26,148) to move said hooks (26,148) into clamping engagement with said rail flanges (6).

2. The connector (1,100) as set forth in claim 1, further characterized in that said connector includes a carrier (16,104) movable with respect to said body (3,102) upon actuation to move each said at least one clamp member (5,106,108).

3. The connector (1,100) as set forth in claim 2, further characterized in that said carrier (16,104) is movably affixed to said body (3,102) in a manner permitting vertical movement with respect thereto upon actuation.

4. The connector (1,100) as set forth in claim 3, further characterized in that said carrier (16,104) includes opposed tabs (17,132) along side edges thereof disposed within windows (19,136) through side walls (9,114,116) of said body (3,102), permitting guided vertical movement of said carrier (16,104) with respect to said body (3,102) upon actuation while said side walls (9,114,116) prevent relative rotational movement.

5. The connector (1,100) as set forth in any of claims 1 to 4, further characterized in that each said at least one clamp member (5,106,108) includes a

carrier-engageable portion (27,156) lifted by said carrier (16,104) upon actuation.

6. The connector (1,100) as set forth in any of claims 1 to 5, further characterized in that each said at least one clamp member (5,106,108) include a pair of flanges (29,158) trapped in openings (30,162) through side walls (9,114,116) of said body (3,102) and movable within said openings (30,162) upon actuation.

7. The connector (100) as set forth in claim 6, further characterized in that said side wall openings (162) are circular and said movement of said pair of flanges (158) is circular for pivoting of each said at least one clamp member (106,108) upon actuation.

8. The connector (100) as set forth in either of claims 6 or 7, further characterized in that each said at least one clamp member (106,108) includes a tongue (156) disposed through and movably trapped within a slot (142) between vertically directed end flanges (140) of said carrier (104) permitting a limited range of angular positions of said tongue (156) with respect to said carrier (104) allowing pivoting of said clamp member (106,108).

9. The connector (1) as set forth in any of claims 1 to 5, further characterized in that said side wall openings are camming slots (30) angled upwardly and inwardly and said movement of said clamp member flanges (29) therealong is upwardly and inwardly upon actuation for translation of said at least one clamp member (5) and said hook (26) thereof upwardly and inwardly to clamp onto a said rail flange (6).

10. The connector (1,100) as set forth in any of claims 1 to 9, further characterized in that said connector (1,100) includes two said clamp members (5,106,108) movable with respect to said body (3,102) and said carrier (16,104) upon actuation.

11. The connector (1,100) as set forth in any of claims 1 to 10, further characterized in that said

actuator (14,110) is a rotatable screw positioned centrally with respect to said hooks (26,148), and a tool-engageable head (166) thereof is exposed along a top surface (112) of said body (3,102).

12. The connector (1,100) as set forth in any of claims 1 to 11, further characterized in that said body (3,102) defines a planar top surface (112) adapted on being mounted thereagainst to abut a bottom surface of a substrate (10) at a plurality of locations spaced apart in several directions.

13. The connector (1,100) as set forth in any of claims 1 to 12, further characterized in that each said at least one clamp member (5,106,108) is rigid and nondeflectable.

14. The connector (1,100) as set forth in any of claims 1 to 13, further characterized in that said hooks (26,148) each include at least one tooth (152) abuttable with said rail flanges (6) to establish assured electrical connection therewith.

15. The connector (1,100) as set forth in any of claims 1 to 14, further characterized in that rail-engaging edges of said body (3,102) include serrations (4,170).

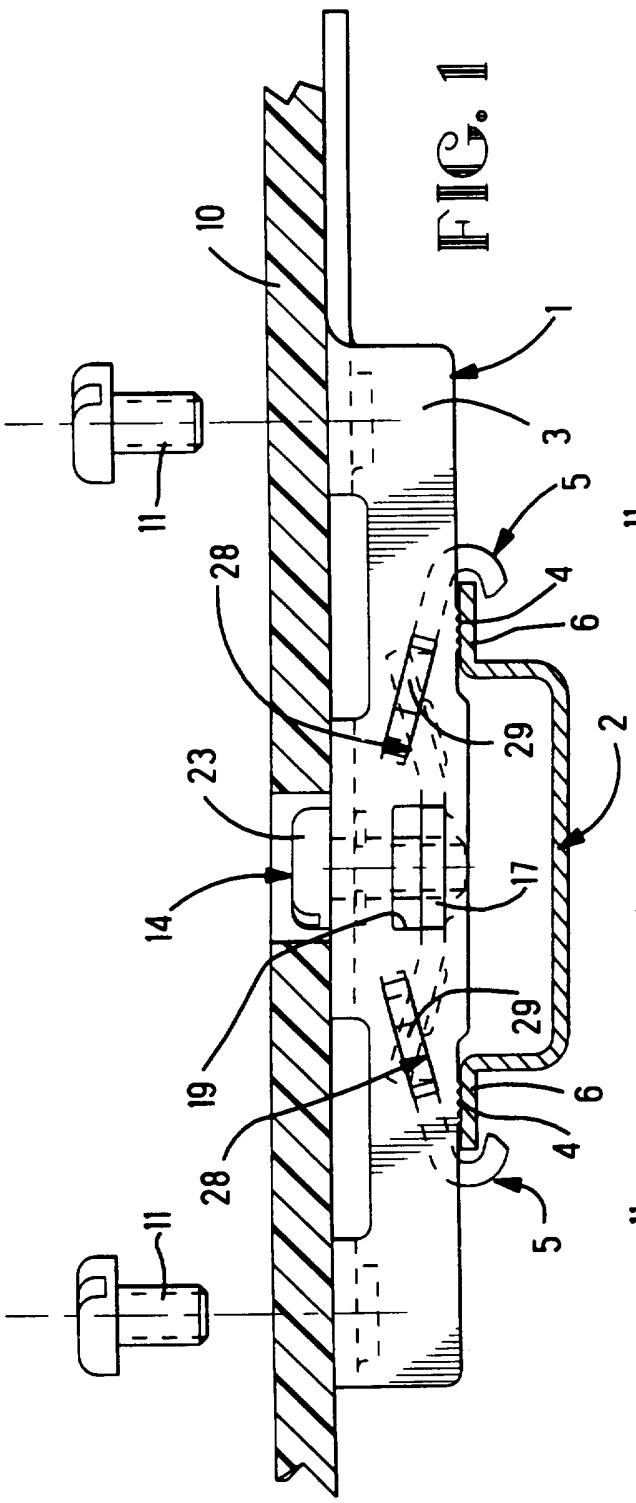
10
1
3
11
5
28
4
6
29
2
23
14
17
19
28
29
6
4
5
11

FIG. 1

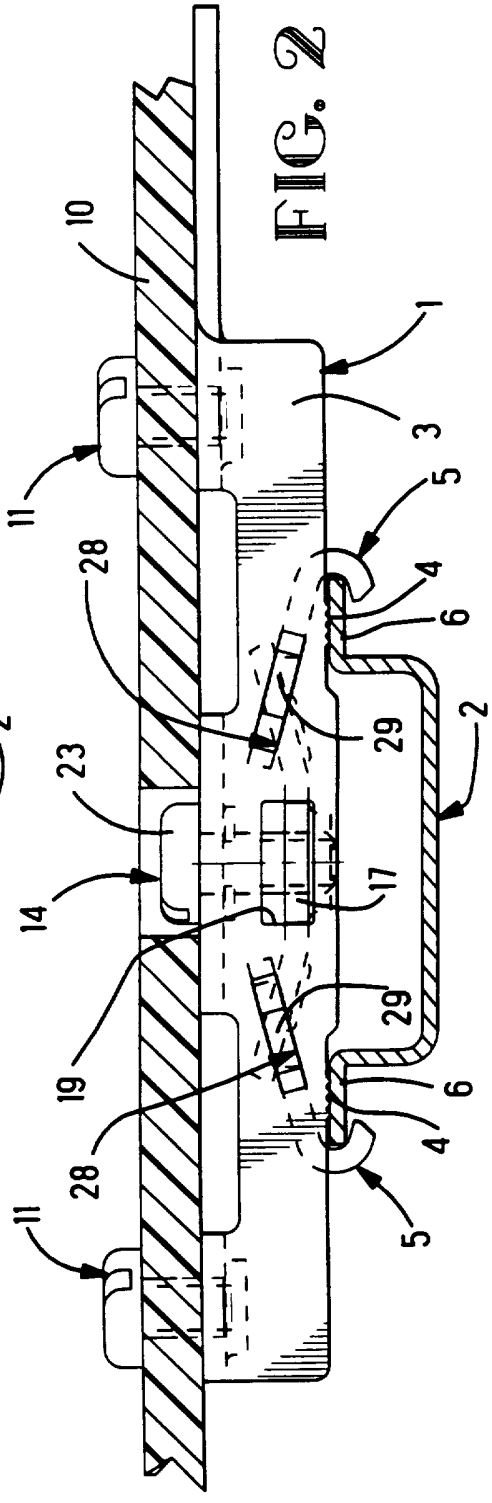
10
1
3
11
5
28
4
6
29
2
23
14
17
19
28
29
6
4
5
11

FIG. 2

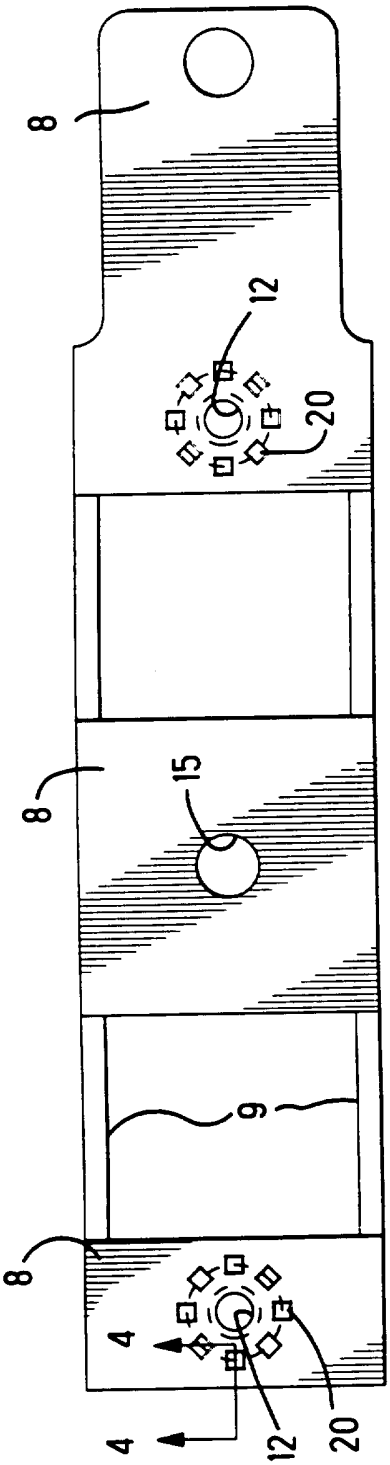

FIG. 8

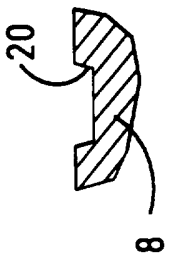

FIG. 4

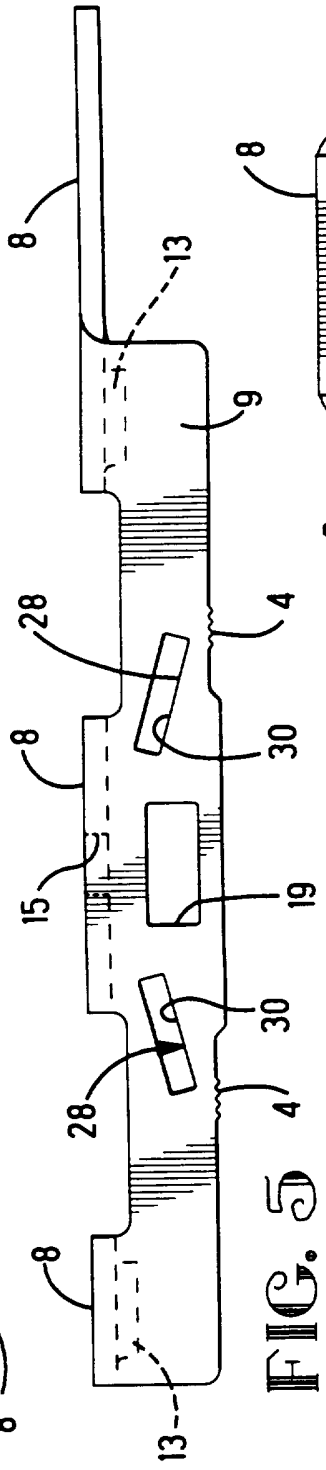

FIG. 5

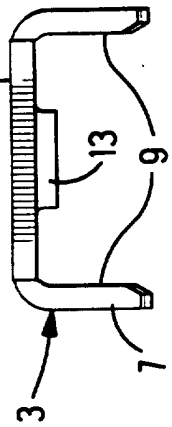

FIG. 6

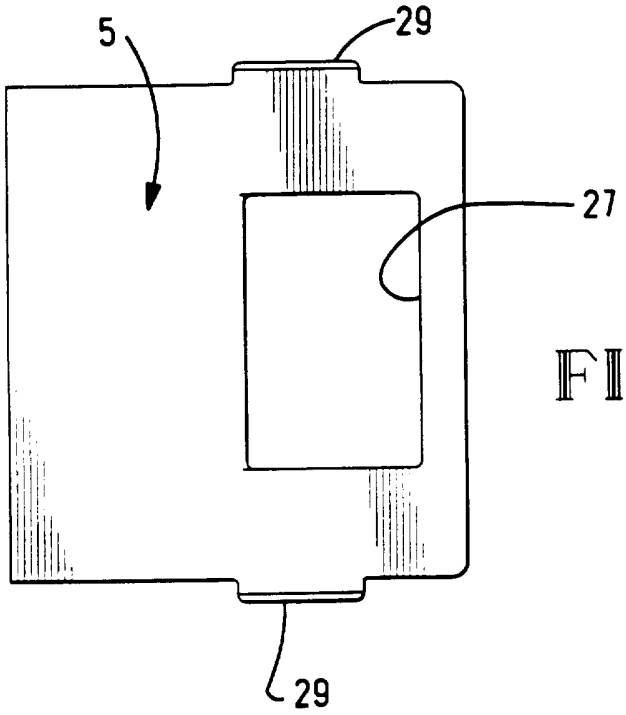

FIG. 7

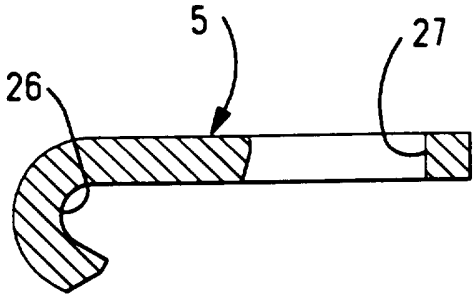

FIG. 8

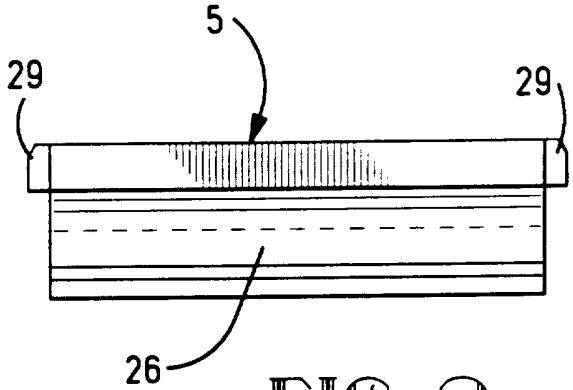

FIG. 9

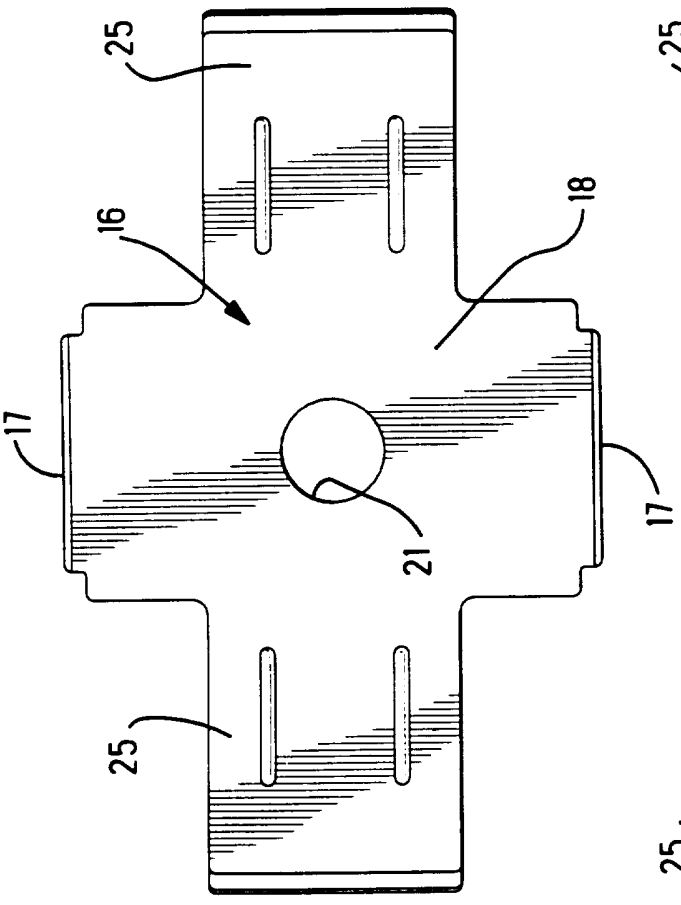

FIG. 10

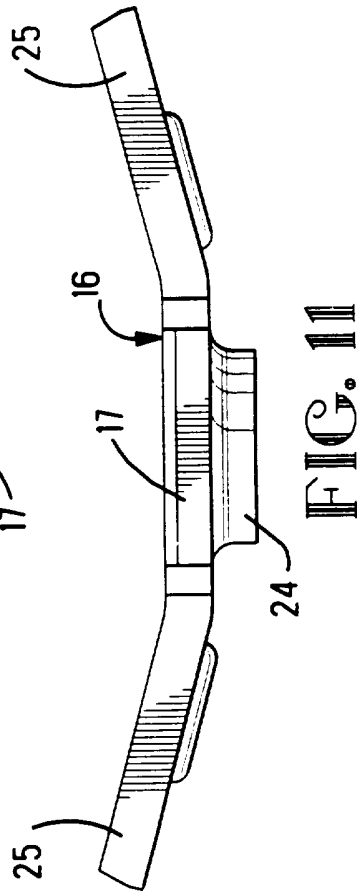

FIG. 11

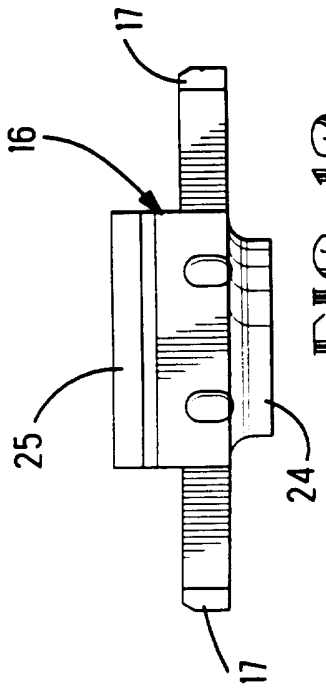

FIG. 12

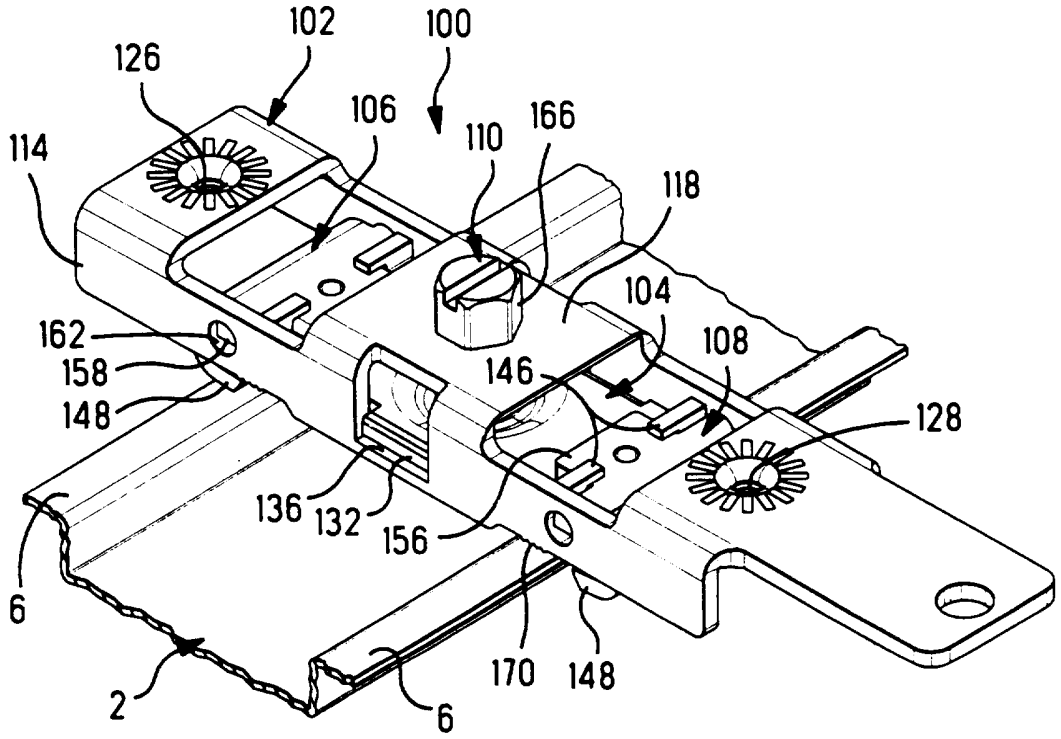
102
100
126
106
166
110
114
118
104
162
108
158
146
148
128
136
132
156
6
170
148
2
6

FIG. 13

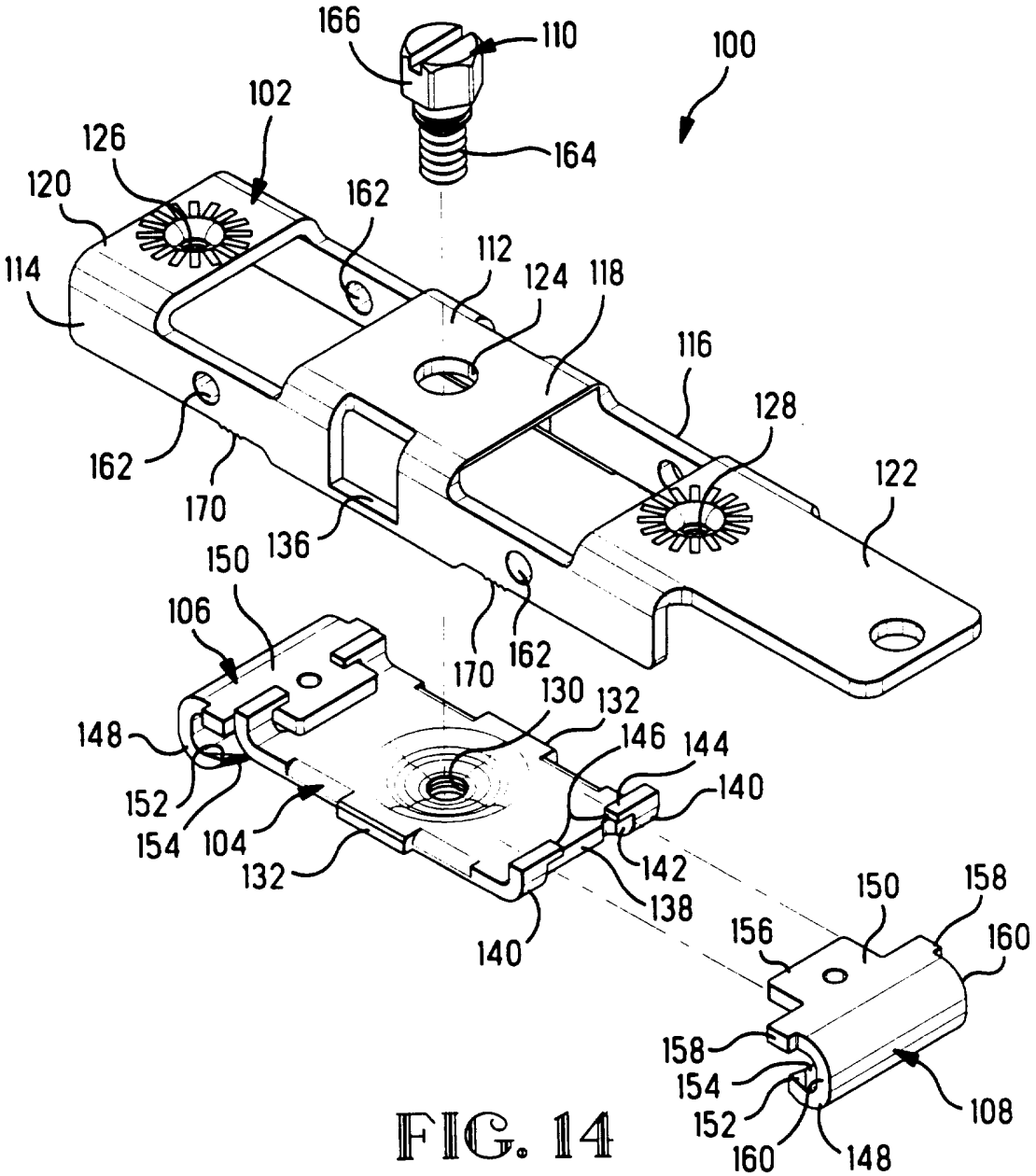
166
110
100
102
126
164
120
162
112
114
124
118
116
128
162
122
170
136
150
106
162
170
130
132
148
146
144
140
152
154
104
132
142
138
140
150
158
156
160
158
154
108
152
160
148

FIG. 14

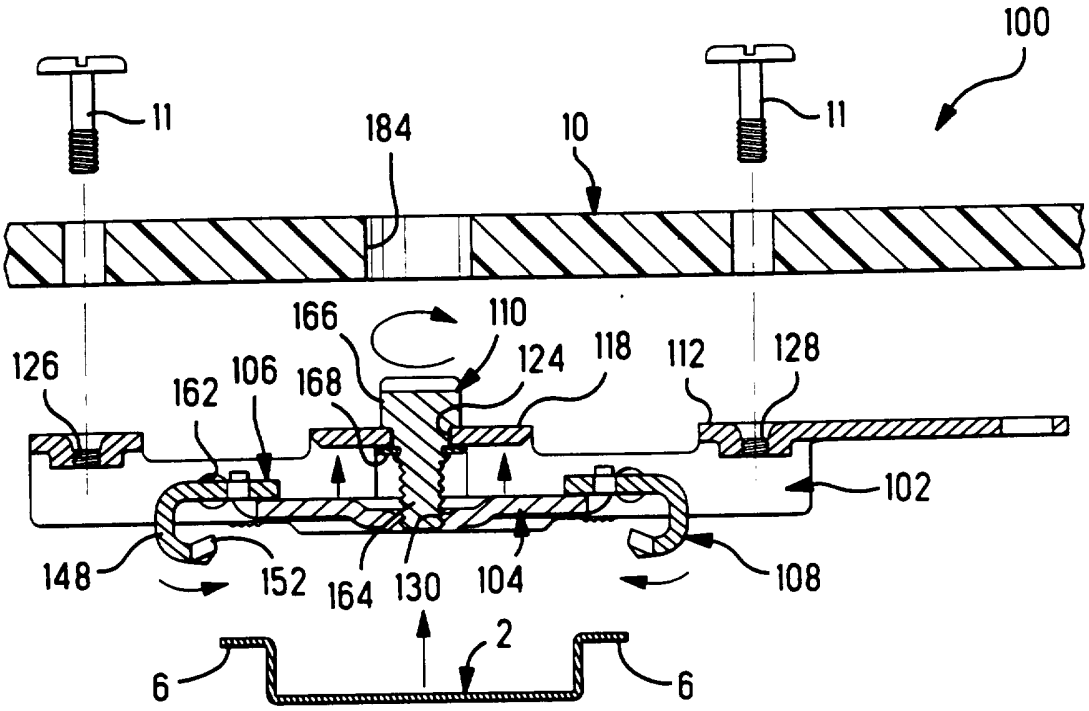
100
11
184
10
11
166
110
126
162
106
168
124
118
112
128
102
148
152
164
130
104
108
2
6
6

FIG. 15

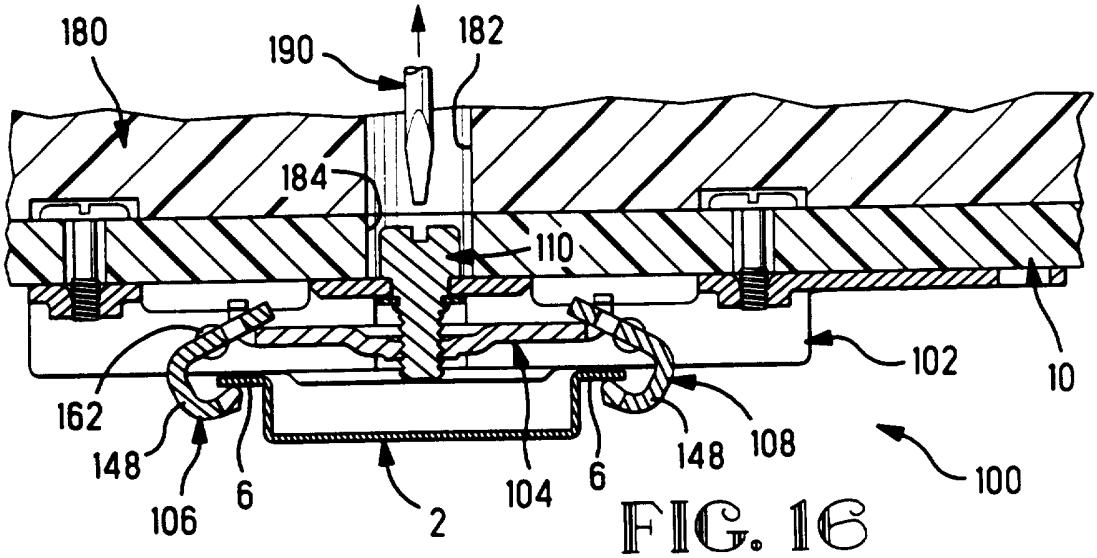
180
190
182
184
110
102
10
162
148
106
6
2
104
6
148
108
100

FIG. 16

INTERNATIONAL SEARCH REPORT

Inter nal Application No
PCT/US 96/04259

A. CLASSIFICATION OF SUBJECT MATTER
IPC 6 H01R9/26 H01R25/14

According to International Patent Classification (IPC) or to both national classification and IPC

B. FIELDS SEARCHED

Minimum documentation searched (classification system followed by classification symbols)
IPC 6 H01R

Documentation searched other than minimum documentation to the extent that such documents are included in the fields searched

Electronic data base consulted during the international search (name of data base and, where practical, search terms used)

C. DOCUMENTS CONSIDERED TO BE RELEVANT

Category *	Citation of document, with indication, where appropriate, of the relevant passages	Relevant to claim No.
X	US,A,4 878 859 (HALLER BERND ET AL) 7 November 1989 abstract see column 2, line 51-57; figures 1,2	1,2,10
Y	US,A,5 174 767 (DIEKMANN JOERG ET AL) 29 December 1992 see column 2, line 26 - column 3, line 24	1-4,8, 11,13
A	see figure 1	15
Y	EP,A,0 364 745 (WIELAND ELEKTRISCHE INDUSTRIE) 25 April 1990 see column 4, line 28-41; figures 2,3,7	1-4,8, 11,13
A	FR,A,2 410 160 (WEIDMUELLER KG C) 22 June 1979 see figures 1-4	1-4,11, 13

-/--

[X] Further documents are listed in the continuation of box C.

[X] Patent family members are listed in annex.

* Special categories of cited documents :

"A" document defining the general state of the art which is not considered to be of particular relevance

"E" earlier document but published on or after the international filing date

"L" document which may throw doubts on priority claim(s) or which is cited to establish the publication date of another citation or other special reason (as specified)

"O" document referring to an oral disclosure, use, exhibition or other means

"P" document published prior to the international filing date but later than the priority date claimed

"T" later document published after the international filing date or priority date and not in conflict with the application but cited to understand the principle or theory underlying the invention

"X" document of particular relevance; the claimed invention cannot be considered novel or cannot be considered to involve an inventive step when the document is taken alone

"Y" document of particular relevance; the claimed invention cannot be considered to involve an inventive step when the document is combined with one or more other such documents, such combination being obvious to a person skilled in the art.

"&" document member of the same patent family

1

Date of the actual completion of the international search	Date of mailing of the international search report
11 July 1996	23. 08. 96

Name and mailing address of the ISA	Authorized officer
European Patent Office, P.B. 5818 Patentlaan 2 NL - 2280 HV Rijswijk Tel. (+ 31-70) 340-2040, Tx. 31 651 epo nl, Fax: (+ 31-70) 340-3016	Berg, S

Form PCT ISA 210 (second sheet) (July 1992)

INTERNATIONAL SEARCH REPORT

Interr nal Application No
PCT/US 96/04259

C.(Continuation) DOCUMENTS CONSIDERED TO BE RELEVANT

Category *	Citation of document, with indication, where appropriate, of the relevant passages	Relevant to claim No.
A	CH,A,629 038 (SPRECHER & SCHUH AG) 31 March 1982 see page 2, column 2, line 34-44	1-3,11, 13
A	CH,A,628 467 (SPRECHER & SCHUH AG) 26 February 1982 see figure 2	15

1

INTERNATIONAL SEARCH REPORT

information on patent family members

Inter nal Application No
PCT/US 96/04259

Patent document cited in search report	Publication date	Patent family member(s)		Publication date
US-A-4878859	07-11-89	EP-A-	0326624	09-08-89
		JP-A-	1225074	07-09-89
		JP-B-	8031341	27-03-96
		TR-A-	25830	01-09-93
US-A-5174767	29-12-92	DE-A-	4039637	17-06-92
		CA-A-	2057406	13-06-92
		DE-D-	59104409	09-03-95
		EP-A-	0491123	24-06-92
		JP-A-	6104034	15-04-94
EP-A-0364745	25-04-90	DE-A-	3835600	03-05-90
		DE-D-	58906697	24-02-94
		ES-T-	2048255	16-03-94
FR-A-2410160	22-06-79	DE-U-	7736440	02-03-78
		CH-A-	640369	30-12-83
CH-A-629038	31-03-82	DE-U-	7834456	22-02-79
CH-A-628467	26-02-82	DE-U-	7837754	03-05-79