US00RE47839E

(19) **United States**
(12) **Reissued Patent**
Lee et al.

(10) **Patent Number: US RE47,839 E**
(45) **Date of Reissued Patent: Feb. 4, 2020**

(54) **LIQUID CRYSTAL DISPLAY DEVICE AND METHOD OF MANUFACTURING THE SAME**

(71) Applicant: **LG DISPLAY CO., LTD.**, Seoul (KR)

(72) Inventors: **Sun Jung Lee**, Seoul (KR); **In Hyuk Song**, Goyang-si (KR); **Heesun Shin**, Paju-si (KR)

(73) Assignee: **LG Display Co., Ltd.**, Seoul (KR)

(21) Appl. No.: **15/662,126**

(22) Filed: **Jul. 27, 2017**

Related U.S. Patent Documents

Reissue of:

(64) Patent No.: **9,098,134**
Issued: **Aug. 4, 2015**
Appl. No.: **13/727,271**
Filed: **Dec. 26, 2012**

(30) **Foreign Application Priority Data**

Mar. 29, 2012 (KR) 10-2012-0032333

(51) **Int. Cl.**
G06F 3/041 (2006.01)
G02F 1/1333 (2006.01)
(Continued)

(52) **U.S. Cl.**
CPC ***G06F 3/041*** (2013.01); ***G02F 1/13338*** (2013.01); ***G06F 3/044*** (2013.01); ***G06F 3/0412*** (2013.01); *G02F 1/136286* (2013.01); *G06F 2203/04103* (2013.01)

(58) **Field of Classification Search**
CPC G06F 3/041; G06F 3/044; G06F 3/0412; G02F 1/1338
See application file for complete search history.

(56) **References Cited**

U.S. PATENT DOCUMENTS

5,825,449 A * 10/1998 Shin G02F 1/1345 349/148
8,031,275 B2 * 10/2011 Lee G02F 1/13338 178/18.01
(Continued)

FOREIGN PATENT DOCUMENTS

CN 101681221 A 3/2010
CN 102109722 A 6/2011
(Continued)

OTHER PUBLICATIONS

Office Action issued in Chinese Patent Application No. 201210524133.X, mailed Apr. 29, 2015, 9 pages.

Primary Examiner — Carlos N Lopez

(74) *Attorney, Agent, or Firm* — Morgan, Lewis & Bockius LLP

(57) **ABSTRACT**

An LCD device includes a plurality of gate lines and data lines cross-arranged on a lower substrate to define a plurality of pixels, a pixel electrode disposed in each of the pixels, a plurality of common electrode blocks pattern-formed that generate an electric field with the pixel electrode and sensing a touch of a user, a plurality of sensing lines, a plurality of pad parts arranged to be separated from each other at predetermined intervals along a corresponding sensing line, and having a line width thicker than the sensing line, and a contact part disposed between a corresponding pad part and a corresponding common electrode block, and electrically connecting a corresponding sensing line and the common electrode block. When the sensing lines are electrically connected to one of the common electrode blocks, the sensing lines are electrically insulated from the other common electrode blocks.

28 Claims, 11 Drawing Sheets

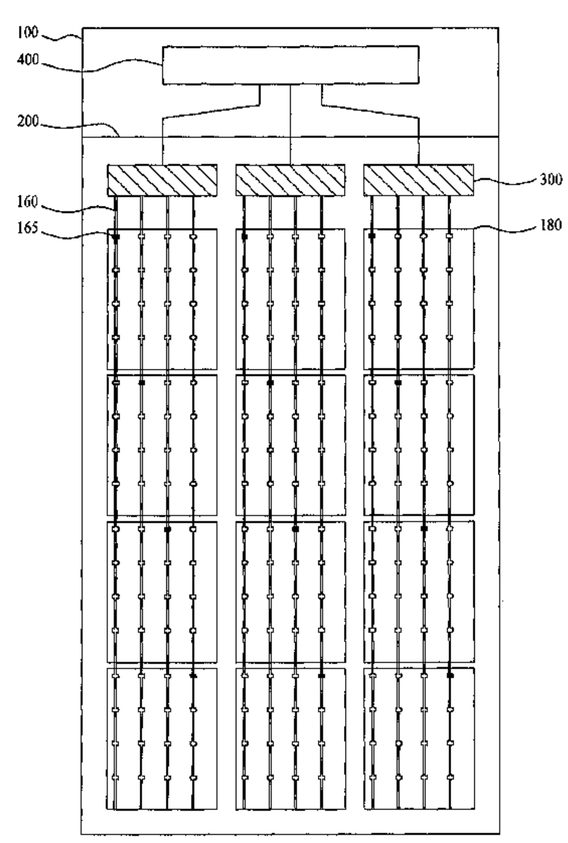

(51) **Int. Cl.**
G06F 3/044 (2006.01)
G02F 1/1362 (2006.01)

(56) **References Cited**

U.S. PATENT DOCUMENTS

8,659,710	B2 *	2/2014	Shin	G02F 1/13338 345/173
2010/0182273	A1	7/2010	Noguchi et al.	
2011/0157039	A1	6/2011	Shin et al.	
2012/0133858	A1 *	5/2012	Shin et al.	G02F 1/13338 349/59
2013/0162570	A1 *	6/2013	Shin et al.	G06F 3/041 345/173

FOREIGN PATENT DOCUMENTS

KR	1020070082757	A	8/2007
KR	1020110100377	A	9/2011
KR	1020110124472	A	11/2011

* cited by examiner

FIG. 1

[Related Art]

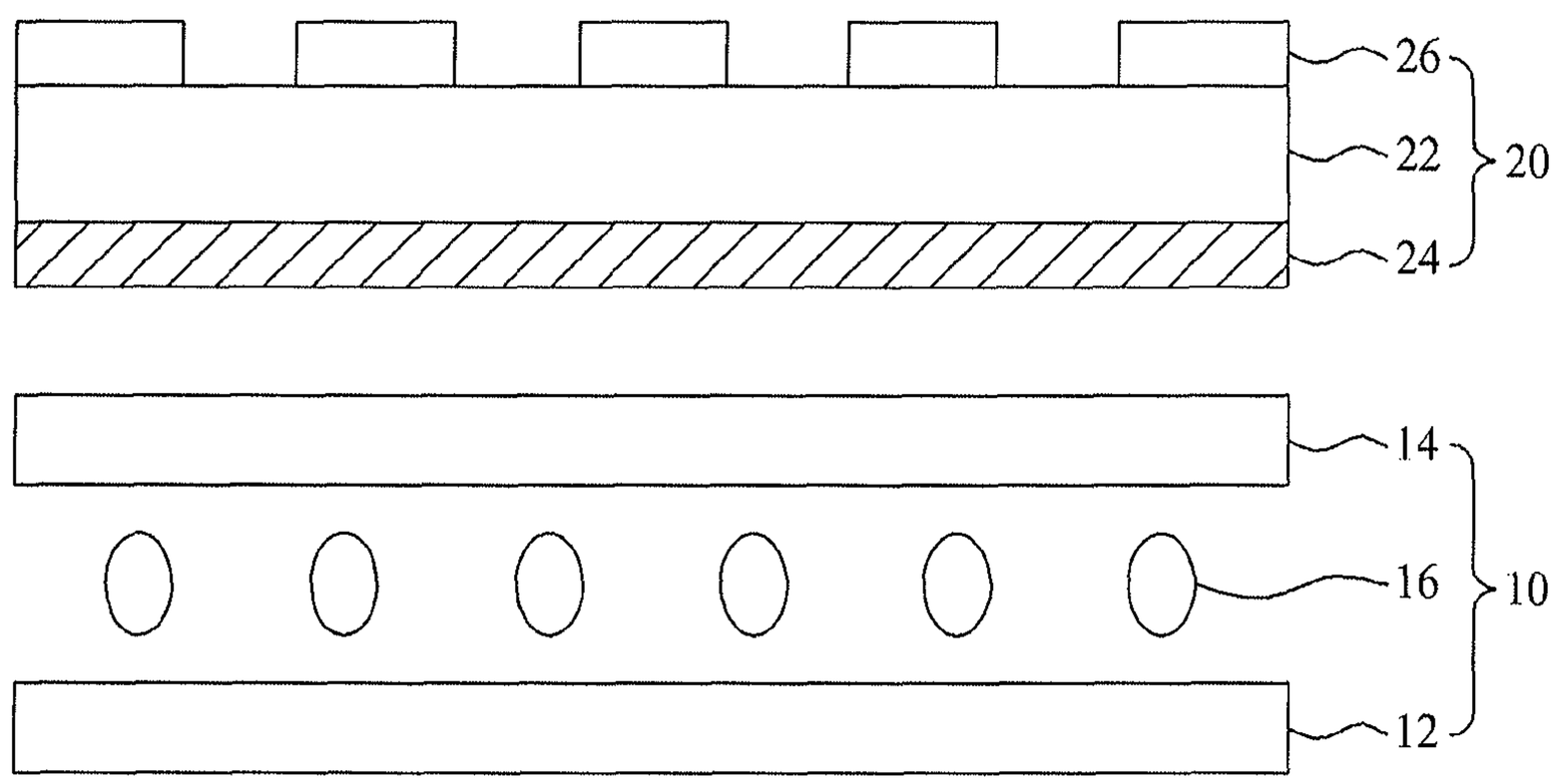

FIG. 2

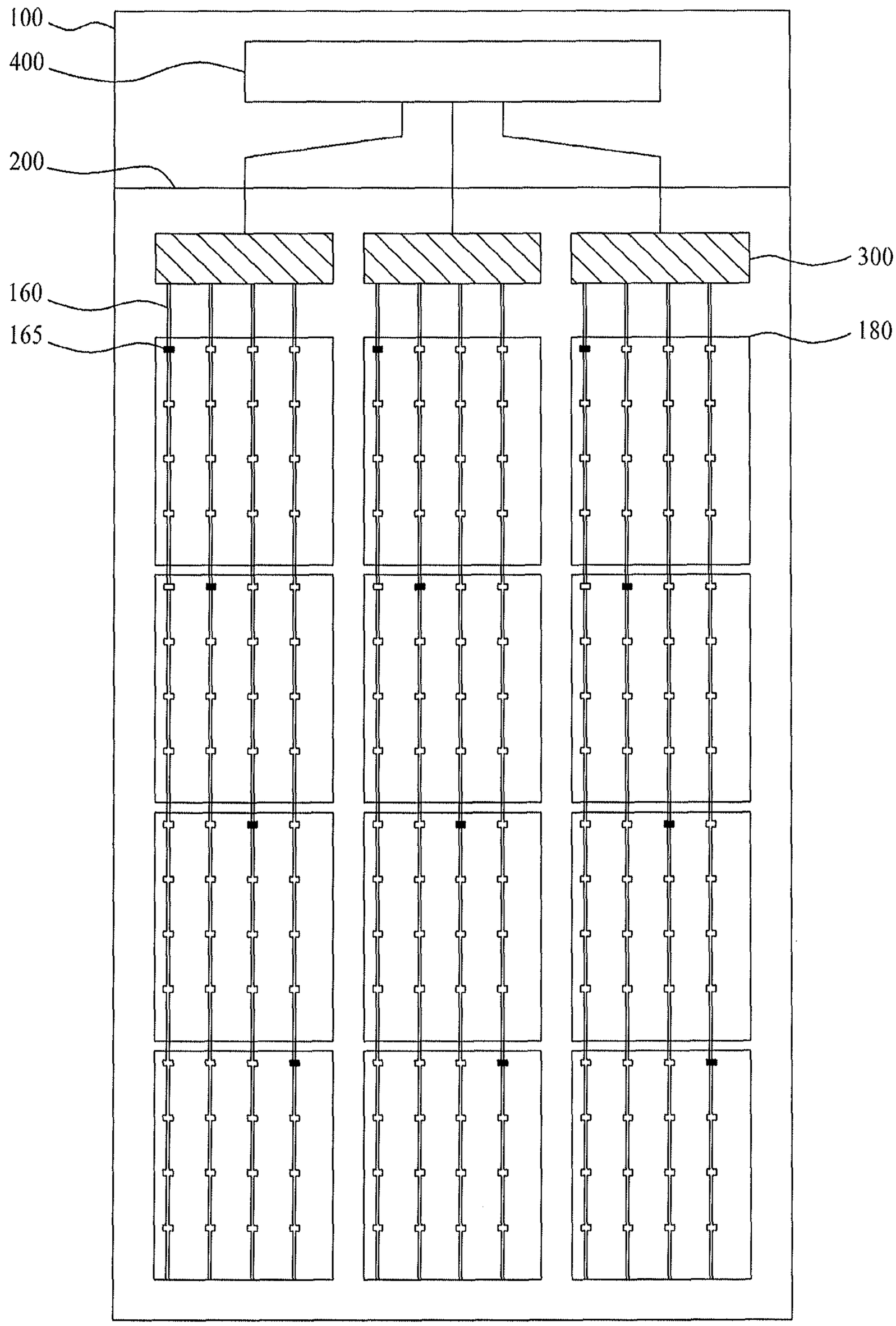

FIG. 3

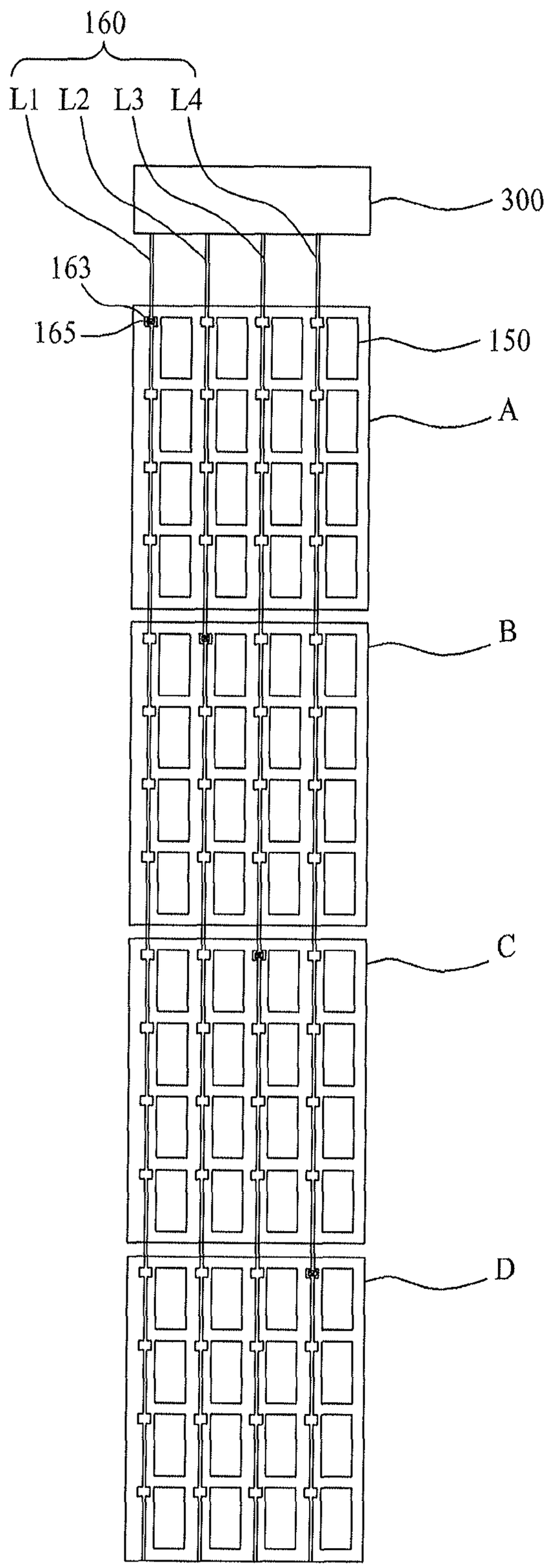

FIG. 4

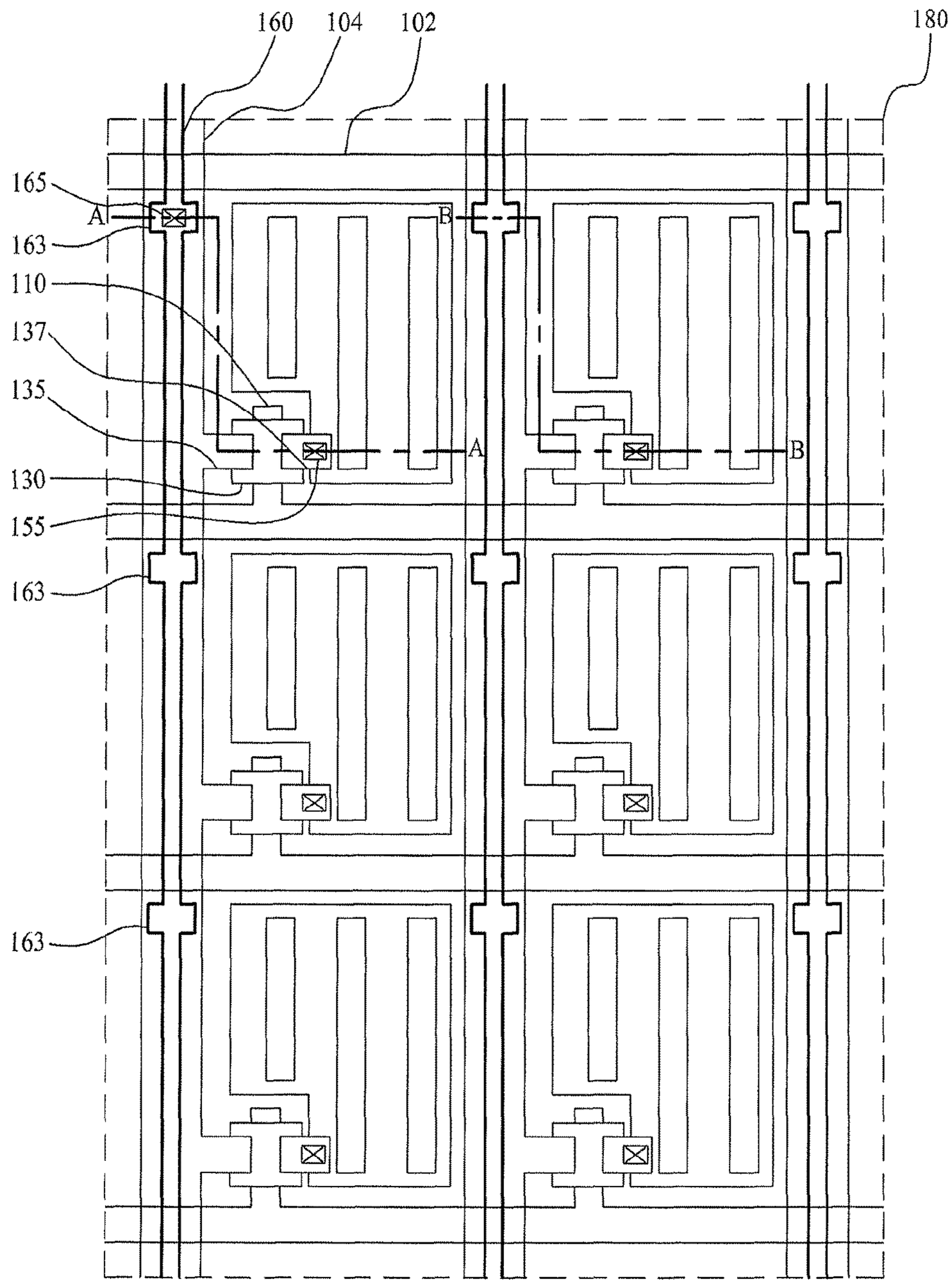

FIG. 5

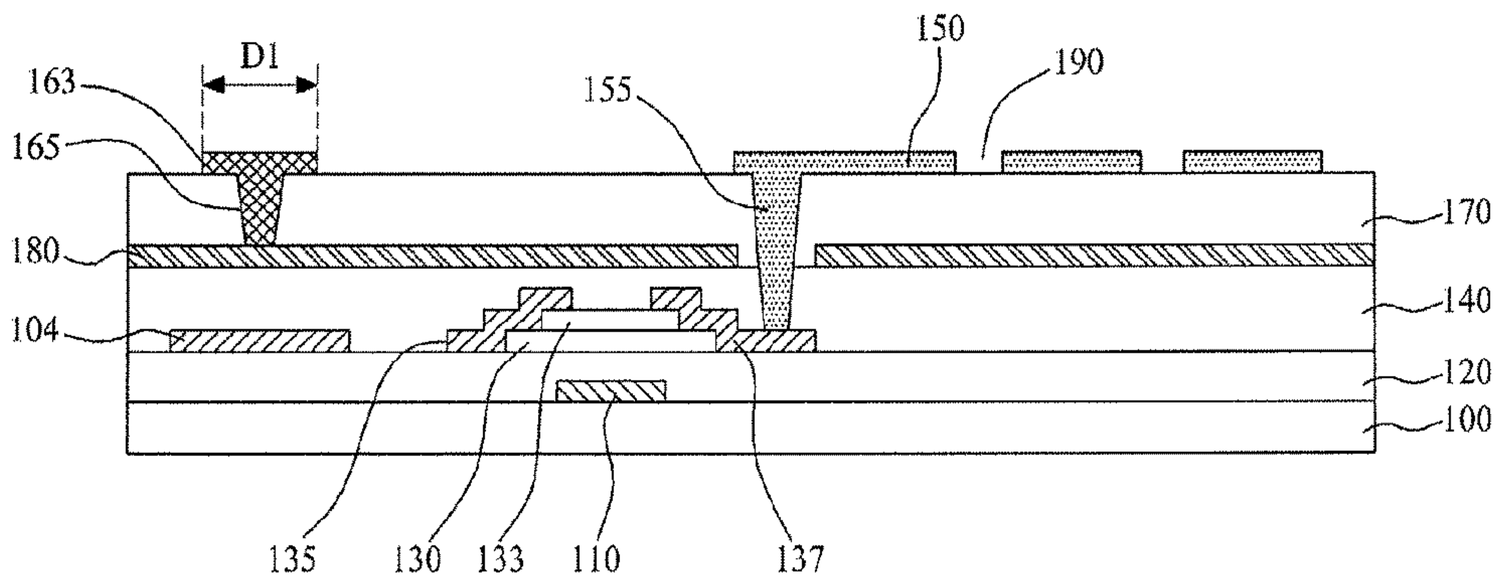
D1
163
165
155
150
190
180
170
104
140
120
100
135
130
133
110
137

FIG. 6

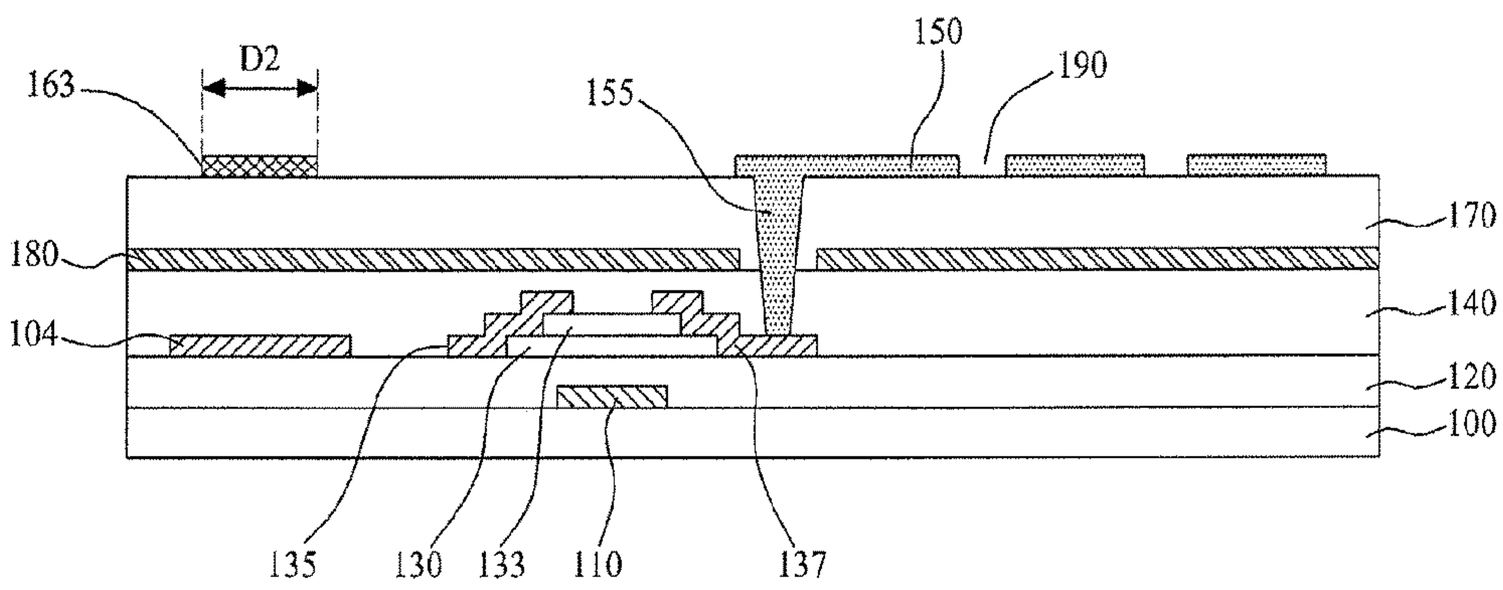
D2
163
155
150
190
180
170
104
140
120
100
135
130
133
110
137

FIG. 7

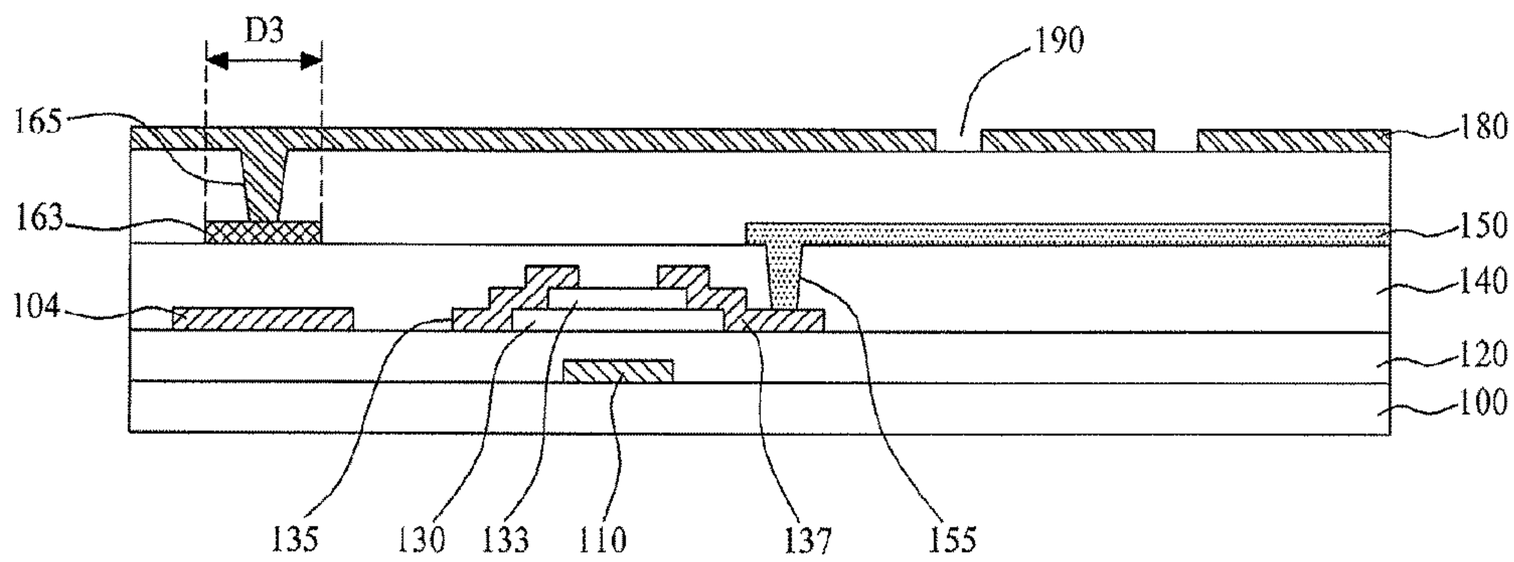
D3
190
165
180
163
150
140
104
120
100
135
130
133
110
137
155

FIG. 8

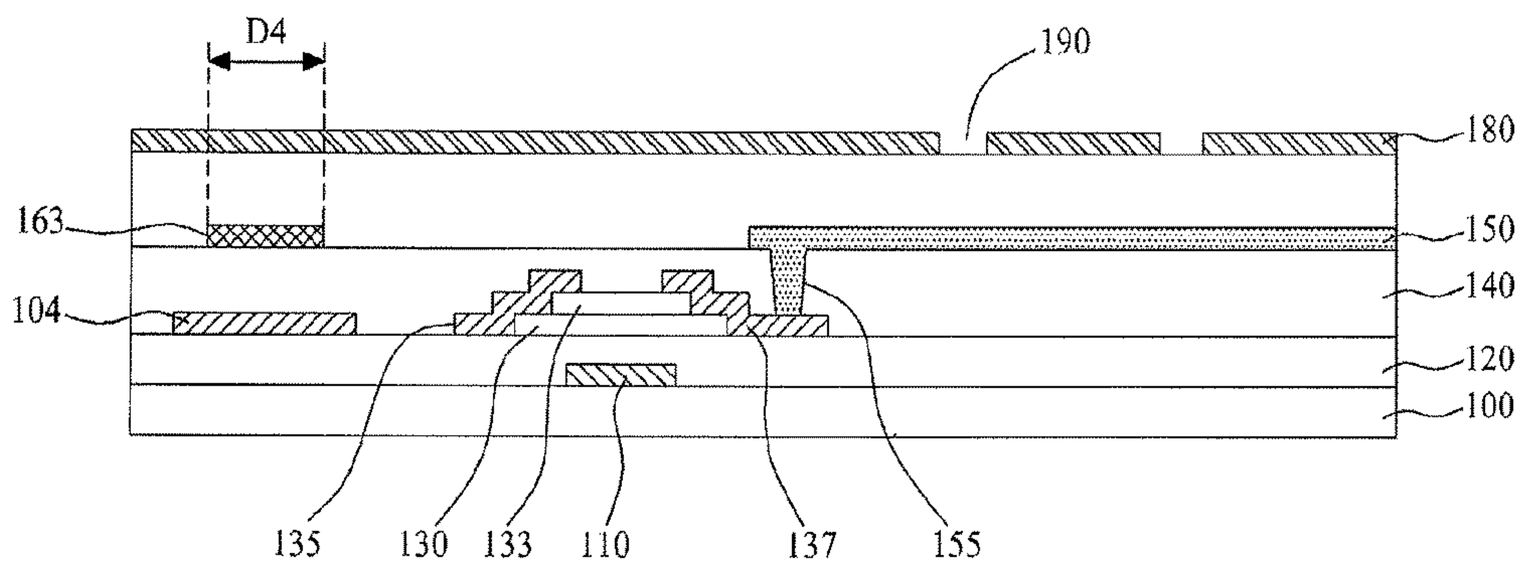
D4
190
180
163
150
140
104
120
100
135
130
133
110
137
155

FIG. 9

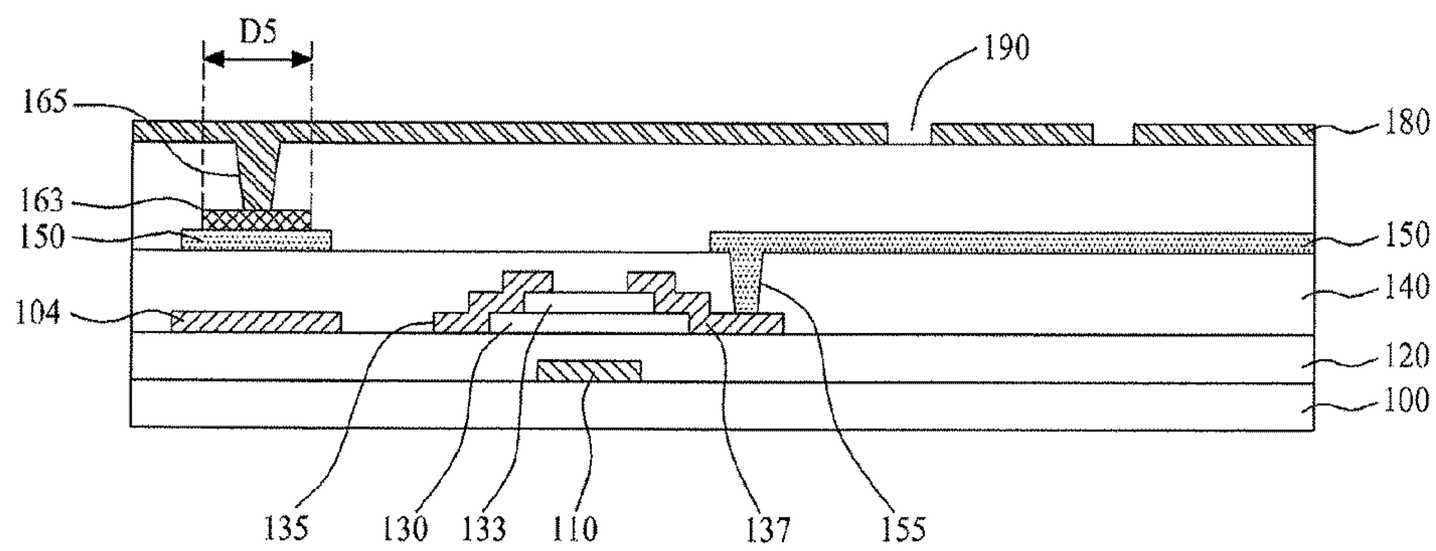
D5
190
165
180
163
150
150
140
104
120
100
135
130
133
110
137
155

FIG. 10

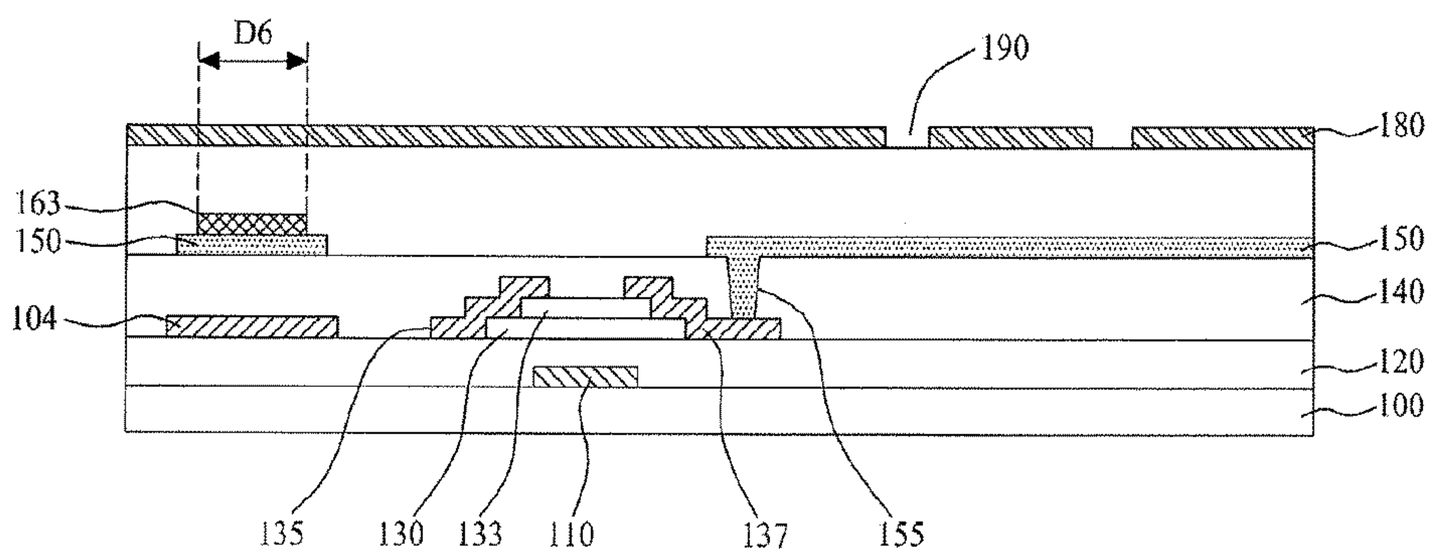
D6
190
180
163
150
150
140
104
120
100
135
130
133
110
137
155

FIG. 11A

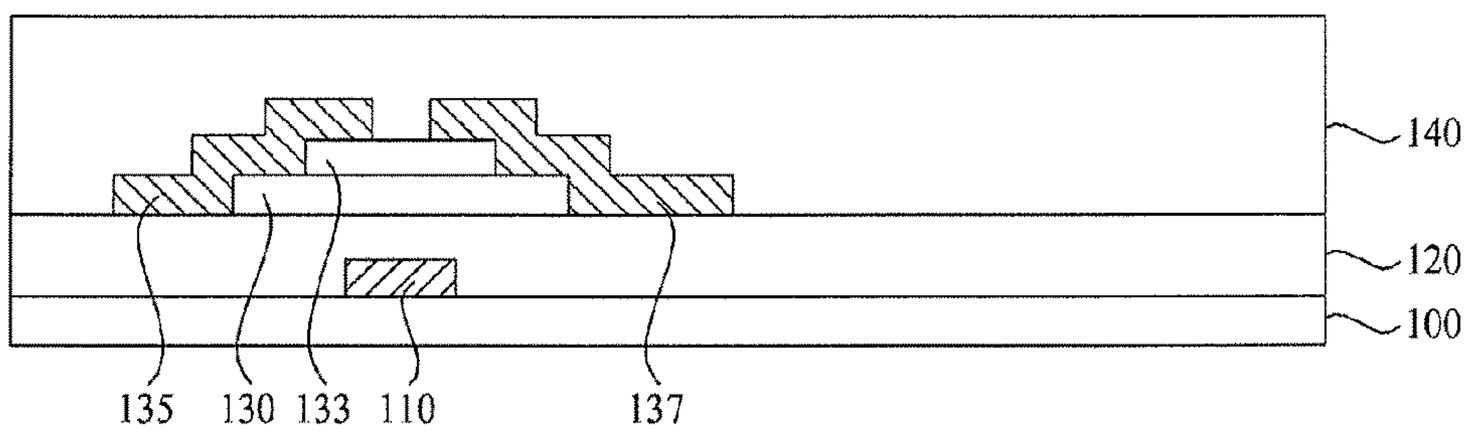

FIG. 11B

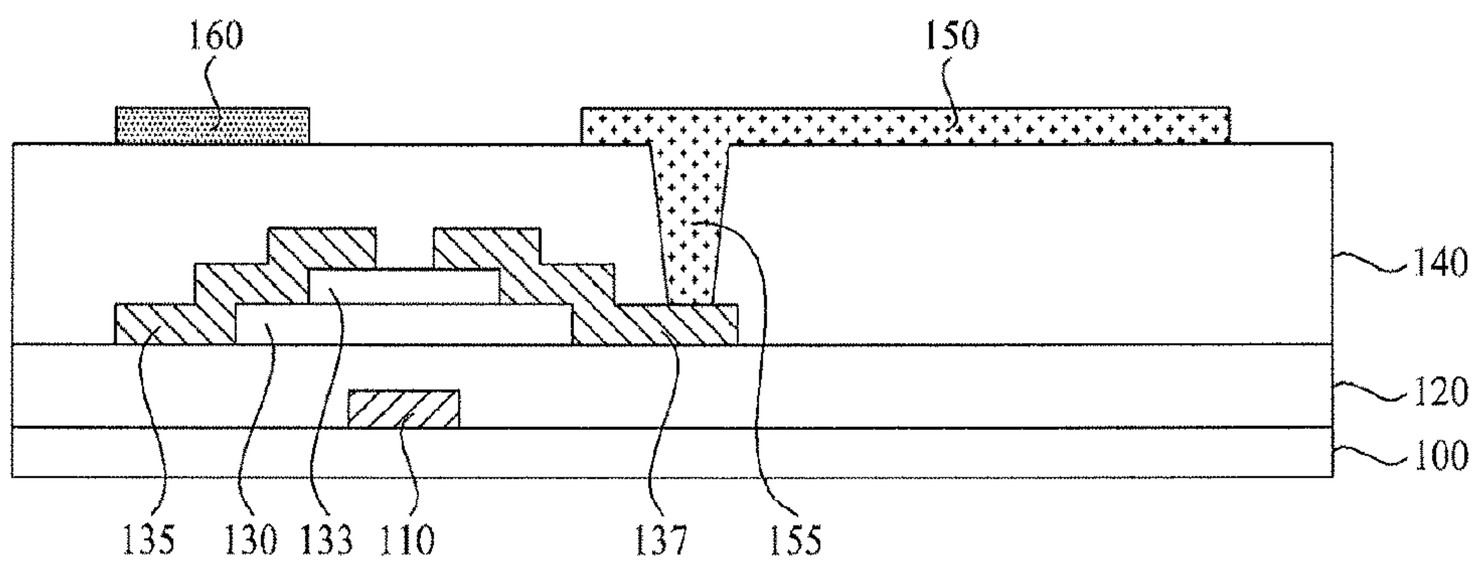

FIG. 11C

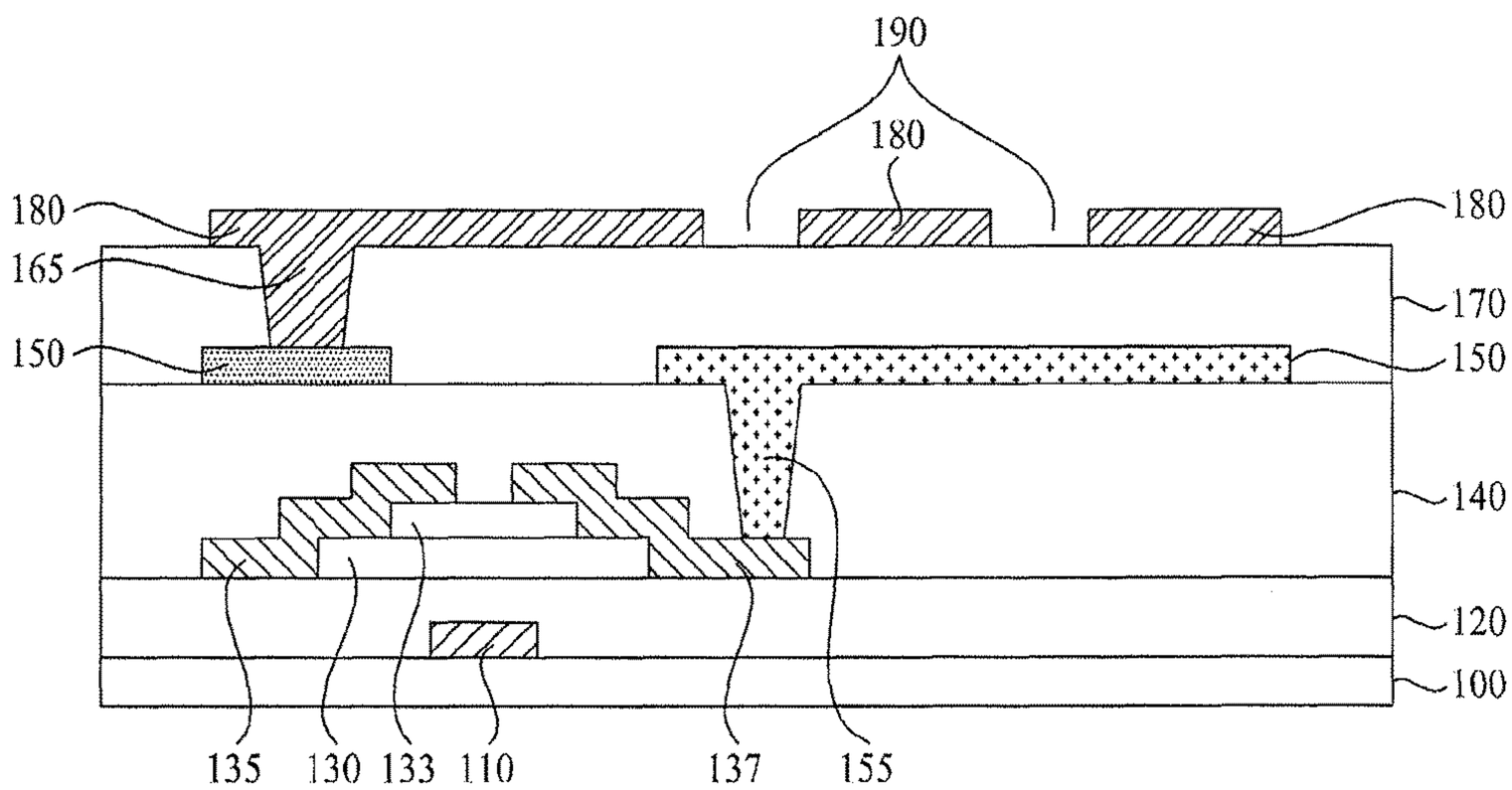
190
180
180
180
165
170
150
150
140
120
100
135
130
133
110
137
155

FIG. 12A

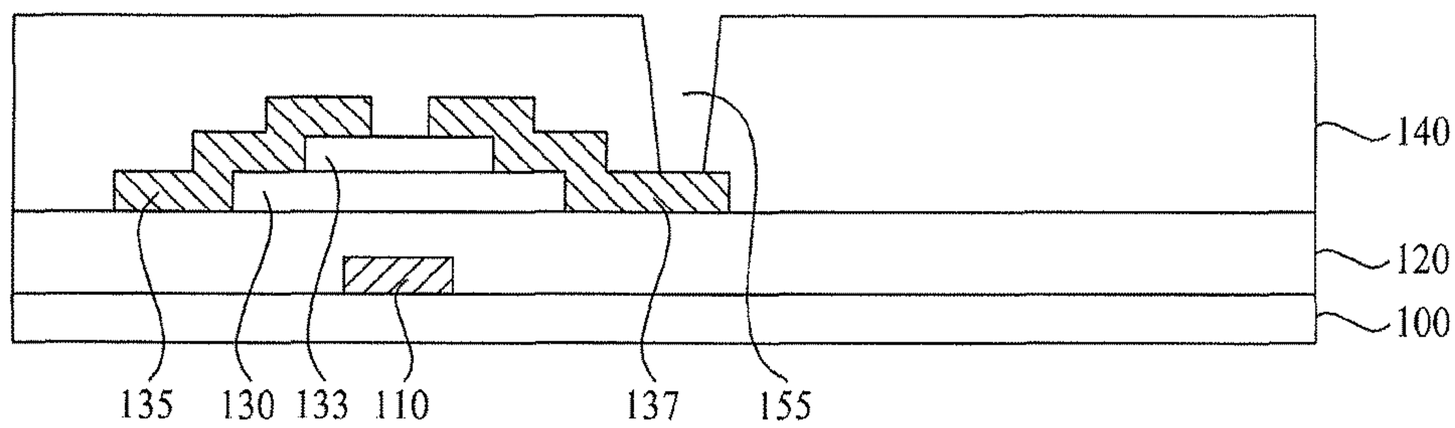

FIG. 12B

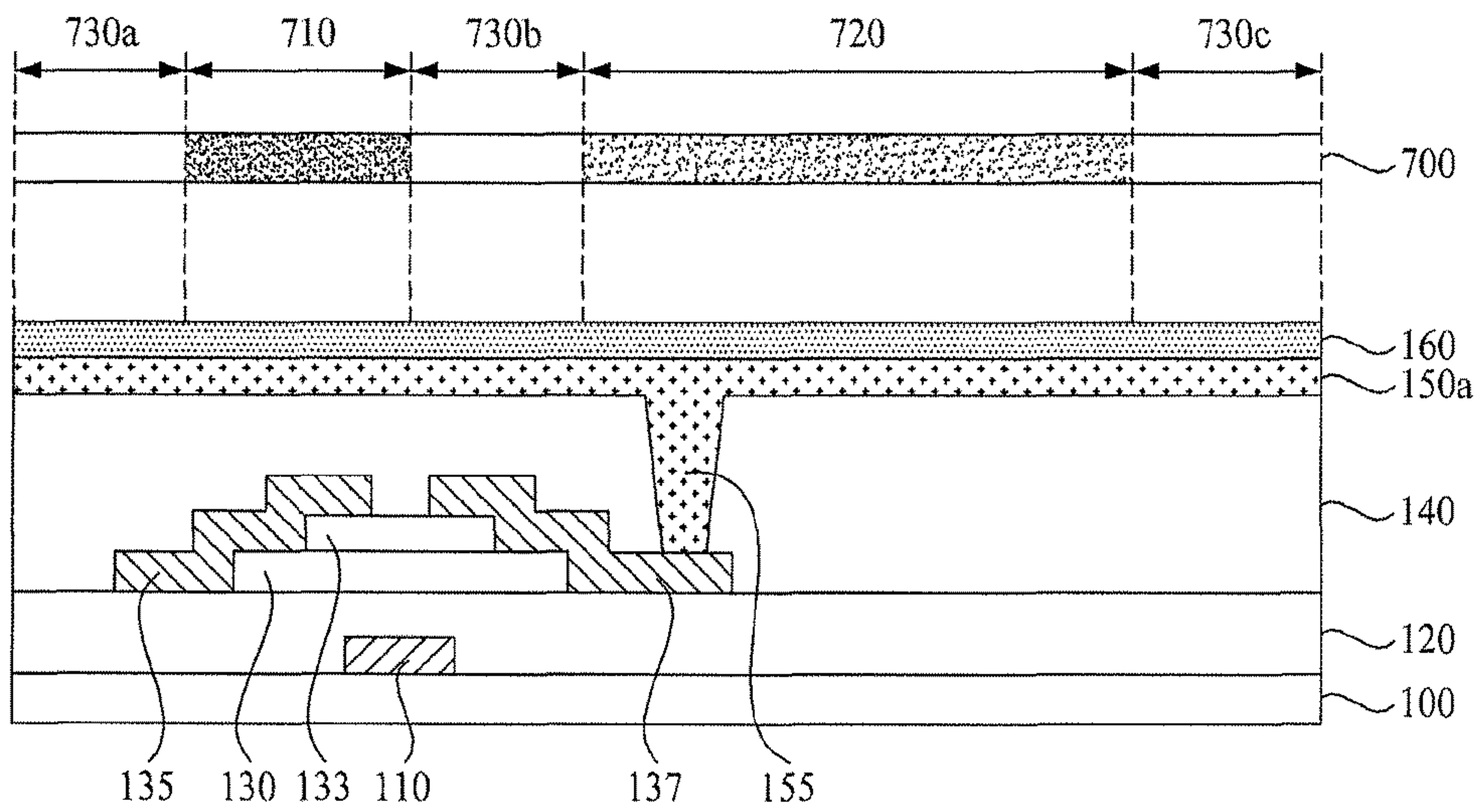

FIG. 12C

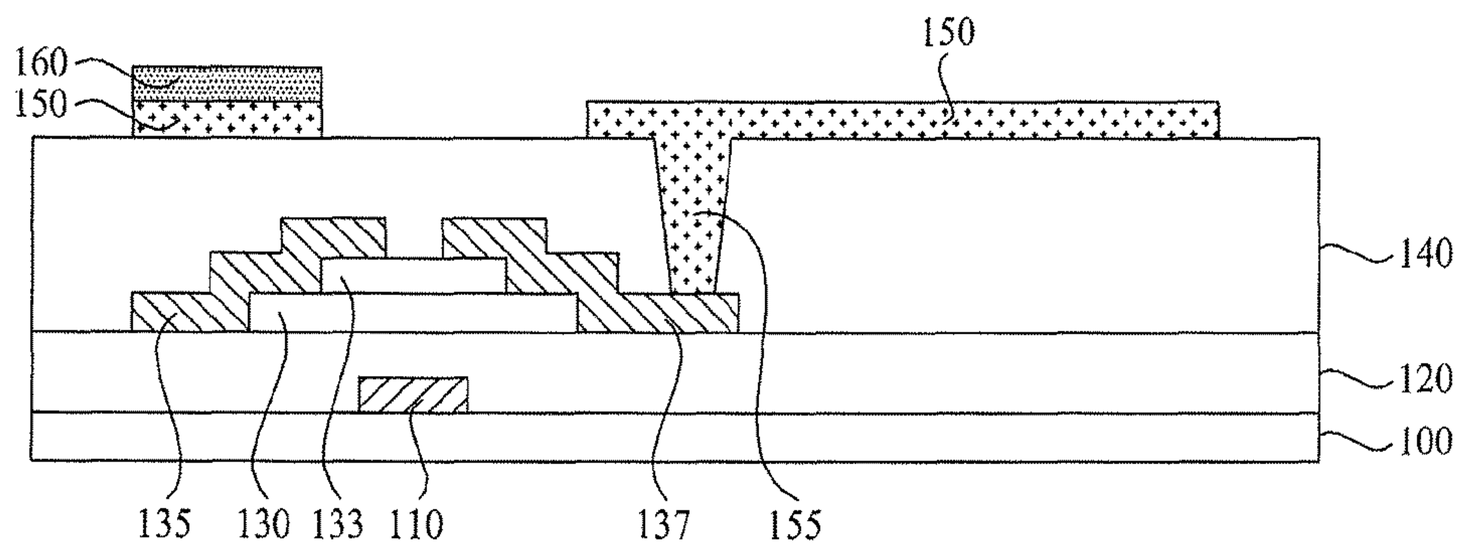

FIG. 12D

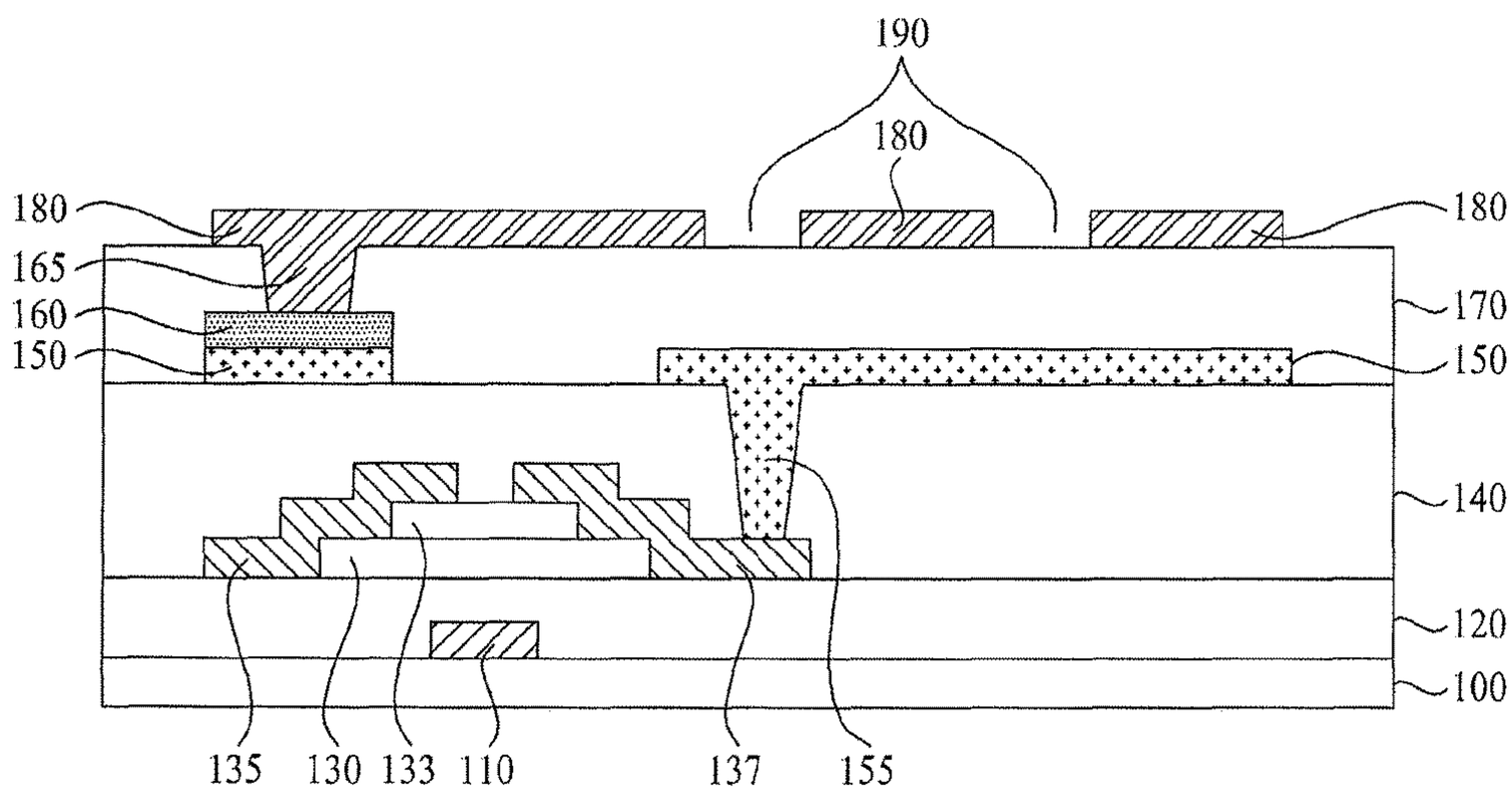

LIQUID CRYSTAL DISPLAY DEVICE AND METHOD OF MANUFACTURING THE SAME

Matter enclosed in heavy brackets [ ] appears in the original patent but forms no part of this reissue specification; matter printed in italics indicates the additions made by reissue; a claim printed with strikethrough indicates that the claim was canceled, disclaimed, or held invalid by a prior post-patent action or proceeding.

This application claims the benefit of the Korean Patent Application No. 10-2012-0032333 filed on Mar. 29, 2012, which is hereby incorporated by reference as if fully set forth herein.

BACKGROUND

1. Field of the Disclosure

The present disclosure relates to a liquid crystal display (LCD) device, and more particularly, to an LCD device that includes a sensing electrode for sensing a user's touch.

2. Discussion of the Related Art

Generally, since LCD devices are driven with a low operating voltage, the LCD devices have low power consumption and are used in portable devices. Accordingly, the LCD devices are widely applied to various fields such as notebook computers, monitors, spacecrafts, airplanes, etc.

LCD devices include a lower substrate, an upper substrate, and a liquid crystal layer formed between the lower substrate and the upper substrate. In the LCD devices, the alignment of liquid crystal in the liquid crystal layer is adjusted with an electric field, and thus, light transmittance of the liquid crystal layer is adjusted, thereby displaying an image.

In the LCD devices, a mouse or a keyboard is generally used as an input means. However, a touch screen that enables a user to directly input information with a finger or a pen is much applied to navigation systems, portable terminals, appliances, etc.

Hereinafter, a related art LCD device using a touch screen will be described in detail.

FIG. **1** is a sectional view schematically illustrating a related art LCD device.

As seen in FIG. **1**, the related art LCD device includes a liquid crystal panel **10** and a touch screen **20**.

The liquid crystal panel **10** displays an image, and includes a lower substrate **12**, an upper substrate **14**, and a liquid crystal layer **16** formed between the lower substrate **12** and the upper substrate **14**.

The touch screen **20** is formed at a top of the liquid crystal panel **10**, and senses a user's touch. The touch screen **20** includes a touch substrate **22**, a first sensing electrode **24** formed at a bottom of the touch substrate **22**, and a second sensing electrode **26** formed at a top of the touch substrate **22**.

The first sensing electrode **24** is widthwise arranged at the bottom of the touch substrate **22**, and the second sensing electrode **26** is lengthwise arranged at the top of the touch substrate **22**. Therefore, when a user touches a certain position, a capacitance between the first and second sensing electrodes **24** and **26** is changed at the touched position, and thus, the touch screen **20** senses the position at which the capacitance has been changed, thereby sensing the user's touch position.

However, since the related art LCD device has a structure in which the touch screen **20** is separately formed at the top of the liquid crystal panel **10**, due to the touch screen **20**, the entire thickness of the related art LCD device increases, a manufacturing process is complicated, and the manufacturing cost increases.

SUMMARY

An LCD device includes: a plurality of gate lines and data lines cross-arranged on a lower substrate to define a plurality of pixels; a pixel electrode in each of the pixels; a plurality of common electrode blocks pattern-formed that generate an electric field with the pixel electrode and sensing a touch of a user; a plurality of sensing lines, wherein when the sensing lines are electrically connected to one of the common electrode blocks, the sensing lines are electrically insulated from the other common electrode blocks; a plurality of pad parts arranged to be separated from each other at predetermined intervals along a corresponding sensing line, and having a line width thicker than the sensing line; and a contact part disposed between a corresponding pad part and a corresponding common electrode block, and electrically connecting a corresponding sensing line and the common electrode block, wherein the contact part is formed to contact at least one or more of a plurality of the pad parts included in a corresponding sensing line which is electrically connected to one of the common electrode blocks.

In another aspect of the present invention, there is provided a method of manufacturing an LCD device which includes: sequentially forming a gate electrode, a gate dielectric, a semiconductor layer, a source electrode, a drain electrode, and a first protective layer on a lower substrate; and forming a pixel electrode electrically connected to the drain electrode, a plurality of common electrode blocks pattern-formed for generating an electric field with the pixel electrode and sensing a touch of a user, a plurality of sensing lines, a plurality of pad parts formed to be separated from each other at predetermined intervals along a corresponding sensing line and having a line width thicker than the sensing line, and a contact part formed between a corresponding pad part and a corresponding common electrode block and electrically connecting a corresponding sensing line and the common electrode block, wherein when the sensing lines are electrically connected to one of the common electrode blocks, the sensing lines are electrically insulated from the other common electrode blocks, wherein the contact part is formed to contact at least one or more of a plurality of the pad parts that are formed in an area overlapping a corresponding common electrode block and a corresponding sensing line are electrically connected.

It is to be understood that both the foregoing general description and the following detailed description of the present invention are exemplary and explanatory and are intended to provide further explanation of the invention as claimed.

BRIEF DESCRIPTION OF THE DRAWINGS

The accompanying drawings, which are included to provide a further understanding of the invention and are incorporated in and constitute a part of this application, illustrate embodiments of the invention and together with the description serve to explain the principle of the invention. In the drawings:

FIG. **1** is a sectional view schematically illustrating a related art LCD device;

FIG. **2** is a plan view schematically illustrating an LCD device according to the present invention;

FIG. **3** is a view for describing the principle that senses a user's touch position in a sensing line of the LCD device according to the present invention;

FIG. **4** is a view illustrating an embodiment of the LCD device according to the present invention;

FIG. **5** is a view illustrating a first embodiment corresponding to a sectional surface taken along line A-A of FIG. **4**;

FIG. **6** is a view illustrating a first embodiment corresponding to a sectional surface taken along line B-B of FIG. **4**;

FIG. **7** is a view illustrating a second embodiment corresponding to a sectional surface taken along line A-A of FIG. **4**;

FIG. **8** is a view illustrating a second embodiment corresponding to a sectional surface taken along line B-B of FIG. **4**;

FIG. **9** is a view illustrating a third embodiment corresponding to a sectional surface taken along line A-A of FIG. **4**;

FIG. **10** is a view illustrating a third embodiment corresponding to a sectional surface taken along line B-B of FIG. **4**;

FIGS. **11**A to **11**C are sectional views illustrating a method of manufacturing an LCD device according to an embodiment of the present invention; and

FIGS. **12**A to **12**D are sectional views illustrating a method of manufacturing an LCD device according to another embodiment of the present invention.

DETAILED DESCRIPTION OF THE EXEMPLARY EMBODIMENTS

Reference will now be made in detail to the exemplary embodiments of the present invention, examples of which are illustrated in the accompanying drawings. Wherever possible, the same reference numbers will be used throughout the drawings to refer to the same or like parts.

Hereinafter, an LCD device and a method of manufacturing the same according to the present invention will be described in detail with reference to the accompanying drawings.

In description of embodiments of the present invention, when a structure is described as being formed at an upper portion/lower portion of another structure or on/under the other structure, this description should be construed as including a case where the structures contact each other and moreover a case where a third structure is disposed therebetween.

<LCD Device>

FIG. **2** is a plan view schematically illustrating an LCD device according to the present invention. FIG. **3** is a view for describing the principle that senses a user's touch position in a sensing line of the LCD device according to the present invention. FIG. **4** is a view illustrating an embodiment of the LCD device according to the present invention.

As seen in FIGS. **2** to **4**, the LCD device according to the present invention includes a lower substrate **100**, a gate line **102**, a data line **104**, a gate electrode **110**, a semiconductor layer **130**, a source electrode **135**, a drain electrode **137**, a pixel electrode **150**, a sensing line **160**, a pad part **163**, a contact part **165**, a common electrode block **180**, a slit **190**, an upper substrate **200**, a multiplexer **300**, and a sensing circuit part **400**.

The lower substrate **100** may be formed of glass or transparent plastic.

The gate line **102** is widthwise arranged on the lower substrate **100**, and the data line **104** is lengthwise arranged on the lower substrate **100**. A plurality of the gate lines **102** and a plurality of the data lines **104** are arranged to intersect, thereby defining a plurality of pixels.

The gate line **102** is illustrated as being arranged in a straight-line shape, and the data line **104** is illustrated as being arranged in a straight-line shape. However, the present invention is not limited thereto. As another example, the data line **104** may be arranged in a curved-line shape.

A thin film transistor (TFT) is formed as a switching element in each of the pixels. The TFT includes the gate electrode **110**, the semiconductor layer **130**, the source electrode **135**, and the drain electrode **137**. The TFT may be formed in a bottom gate structure in which the gate electrode **110** is disposed under the semiconductor layer **130**, or formed in a top gate structure in which the gate electrode **110** is disposed on the semiconductor layer **130**.

The pixel electrode **150** is formed in each pixel, and particularly, is formed in a type corresponding to the type of each pixel.

The sensing line **160** includes the pad part **163**, and applies an electrical signal to the common electrode block **180**. The sensing line **160** is electrically connected to the common electrode block **180**, and the sensing circuit part **400** is connected to a distal end of the sensing line **160**. Thus, when a user touches the common electrode block **180**, the electrical signal is applied to the sensing circuit part **400** through the sensing line **160**, and thus, the user's touch position is sensed.

When the sensing line **160** is electrically connected to one of a plurality of the common electrode blocks **180**, the sensing line **160** is electrically insulated from the other common electrode blocks **180**, and detects a user's touch position.

A detailed description on this will be made with reference to FIG. **3**. In FIG. **3**, four common electrode blocks A to D (**180**) and four sensing lines L**1** to L**4** (**160**) are illustrated.

As seen in FIG. **3**, the sensing line L**1** (**160**) is connected to the common electrode block A (**180**) through the contact part **165**, and electrically insulated from the other common electrode blocks B to D (**180**). Thus, when a user touches the common electrode block A (**180**), an electrical signal corresponding to the touch is transferred to the sensing line L**1** (**160**), and thus, the user's touch position is detected.

In this way, the sensing line L**2** (**160**) is connected to the common electrode block B (**180**) through the contact part **165**, and electrically insulated from the other common electrode blocks A, C and D (**180**). Thus, when a user touches the common electrode block B (**180**), an electrical signal corresponding to the touch is transferred to the sensing line L**2** (**160**), and thus, the user's touch position is detected.

The sensing line L**3** (**160**) is connected to the common electrode block C (**180**) through the contact part **165**, and electrically insulated from the other common electrode blocks A, B and D (**180**). Thus, when a user touches the common electrode block C (**180**), an electrical signal corresponding to the touch is transferred to the sensing line L**3** (**160**), and thus, the user's touch position is detected.

The sensing line L**4** (**160**) is connected to the common electrode block D (**180**) through the contact part **165**, and electrically insulated from the other common electrode blocks A to C (**180**). Thus, when a user touches the common electrode block D (**180**), an electrical signal corresponding

to the touch is transferred to the sensing line L**4** (**160**), and thus, the user's touch position is detected.

According to the above-described structure of the common electrode block **180** and the sensing line **160**, a user's touch position is detected on an X-Y plane by using only the sensing line **160** which is formed to be extended only in one direction of the lower substrate **100**.

Accordingly, the present invention can simplify the structure of the LCD device and save the cost compared to the related art LCD device in which the sensing lines **160** are formed in two directions (i.e., the X-axis direction and the Y-axis direction).

The sensing line **160** applies an electrical signal to the common electrode block **180**, and reduces the resistance of the common electrode.

The common electrode block **180** is generally formed of a transparent material such as indium tin oxide (ITO), but the transparent material has a high resistance. For this reason, by connecting the sensing line **160** (which is formed of a metal material having excellent conductivity) to the common electrode block **180**, the resistance of the common electrode block **180** can decrease. For example, the sensing line **160** may be formed of one selected among from Mo, Al, and Cu, or an alloy thereof.

The sensing line **160** may be formed in a direction parallel to the gate line **102** or a direction parallel to the data line **104**. According to the present invention, although the sensing line **160** may be formed in a direction parallel to the gate line **102** or a direction parallel to the data line **104**, a user's touch position is detected on the X-Y coordinate plane.

However, an aperture ratio is reduced due to the sensing line **160**. To overcome this limitation, the sensing line **160** formed in parallel to the data line **104** may overlap the data line **104**, and moreover, the sensing line **160** formed in parallel to the gate line **102** may overlap the gate line **102**.

The pad part **163** is formed in plurality, and the plurality of pad parts **163** are separated from each other at predetermined intervals along the sensing line **160**. The pad part **163** may be formed to have a line width broader than that of the sensing line **160**. That is, the sensing line **160** is electrically connected to the common electrode block **180** through the contact part **165** contacting the pad part **163**. For a smooth connection between the sensing line **160** and the common electrode block **180**, the sensing line may include the pad part **163** having a line width broader than that of the sensing line **160**.

In this case, the pad part **163** may be formed to have a constant line width regardless of whether the pad part **163** is connected to the contact part **165**. That is, the pad part **163** is formed on the sensing line **160** for a connection between the sensing line **160** and the common electrode block **180**, but, irrespective of whether the contact part **165** is on (or under) the pad part **163**, the pad part **163** is formed to have a constant line width.

To provide a description on this as an example, as seen in FIG. **3**, four pad parts **163** are formed at certain intervals along the sensing line L**1** (**160**), in an area overlapping the common electrode block A (**180**), and, although the contact part **165** is formed in only one of the four pad parts **163**, the four pad parts **163** are formed to have the same line width.

The pad part **163** is formed in plurality, and the plurality of pad parts **163** are separated from each other at certain intervals along the sensing line **160**. As seen in FIG. **3**, in an embodiment, the pad parts **163** may be separated from each other at certain intervals, and one pad part **163** may be formed in each pixel. Also, as seen in FIG. **4**, the pad part **163** may be formed just under the gate line **102**. In the above-described embodiment, it has been described above that one pad part **163** is formed in each pixel and formed just under the gate line **102**, but the pad part **163** of the LCD device according to the present invention is not limited thereto.

One sensing line **160** includes a plurality of the pad parts **163** that are formed to be separated from each other at certain intervals, and the pad parts **163** are formed at respective positions symmetric with the pad parts **163** included in an adjacent sensing line **160**.

In an embodiment, as seen in FIG. **3**, a plurality of the pad parts **163** included in the sensing line L**1** (**160**) are formed at respective positions symmetric with a plurality of the pad parts **163** included in the sensing line L**2** (**160**) adjacent thereto. That is, a first pad part **163** of the sensing line L**1** (**160**) and a first pad part **163** of the sensing line L**2** (**160**) are formed on one straight line in a direction vertical to the length direction of the sensing line **160**.

When the pad part **163** is formed in only the sensing lines **160** corresponding to a position at which the contact part **165** is formed or the pad part **163** is not formed at a position symmetric with the pad part **163** of an adjacent sensing line **160**, a stain occurs in the surface of the display panel due to the non-uniform line width of the sensing line **160** when reproducing images. The stain is caused by the non-uniform distribution of parasitic capacitances due to the pad part **163** disposed near the pixel electrode **150**, in which case the distribution form of the parasitic capacitances may be various forms such as a flag form.

However, when a plurality of pad parts **163** that are formed to be separated from each other at certain intervals along the sensing line **160** are formed at respective positions symmetric with the pad parts **163** of an adjacent sensing line **160**, parasitic capacitances are uniformly distributed on the entire surface of the display panel, and thus, the stain of the surface of the display panel is prevented when reproducing images.

The contact part **165** is formed between the pad part **163** and the common electrode block **180**, and electrically connects the sensing line **160** and the common electrode block **180**.

The sensing line **160** includes a plurality of the pad parts **163** that are formed to be separated from each other at certain intervals, in which case the contact part **165** is formed on (or under) at least one or more of a plurality of pad parts **163** and electrically connects the sensing line **160** and the common electrode block **180**.

In this case, as described above, when one sensing line **160** is electrically connected to one common electrode block **180**, the one sensing line **160** is electrically insulated from the other common electrode blocks **180**, and thus, the contact part **165** is not simultaneously formed in different common electrode blocks **180** with respect to the one sensing line **160**.

To provide a description on this with FIG. **3** as an example, when the sensing line L**1** (**160**) is electrically connected to the common electrode block A (**180**) through the contact part **165**, the contact part **165** is not formed in an area in which the sensing line L**1** overlaps the other common electrode blocks B to D (**180**).

The contact part **165** may be formed to contact at least one or more of a plurality of the pad parts **163** included in the sensing line **160** which is electrically connected to one of the plurality of common electrode blocks **180**.

A description on this will be made with reference to FIG. **3** as an example. In FIG. **3**, the sensing line L**1** (**160**) is illustrated as being electrically connected to the common

electrode block A (**180**) through one contact part **165**. However, since a total of four pad parts **163** are formed in an area in which the common electrode block A (**180**) overlaps the sensing line L**1** (**160**), the contact part **165** may be formed to contact at least one or more of the four pad parts **163**.

To prevent the reduction in an aperture ratio, the contact part **165** may be formed in a non-transmissive area. The non-transmissive area is an area except an area in which light passes through a pixel, and for example, denotes an area in which the data line **104** and the gate line **102** are formed.

In FIG. **4**, the contact part **165** is illustrated as being formed adjacently to the gate line **102**, but is not limited thereto. Depending on the case, the contact part **165** may be formed adjacently to the data line **104** and the source electrode **135**.

The common electrode block **180** is formed on a layer different from that of the pixel electrode **150**, and, the common electrode block **180** and the pixel electrode **150** generate an electric field to drive liquid crystal. That is, the common electrode block **180** acts as a sensing electrode that senses a user's touch position.

In order to use the common electrode block **180** as a sensing electrode, the common electrode block **180** is formed in plurality, in which case the plurality of common electrode blocks **180** are separated from each other in a certain pattern. The common electrode blocks **180** may be formed to have a size corresponding to one or more pixels, and particularly, how many pixels the size of the common electrode block **180** corresponds to depends on the touch resolution of the LCD device.

That is, when an area corresponding to a number of pixels is formed as one common electrode block **180**, a touch resolution decreases in inverse proportion to the number of pixels. For example, when an area corresponding to a too small number of pixels is formed as one common electrode block **180**, a touch resolution increases, but the number of sensing lines **160** increases.

The slit **190** may be formed as at least one or more, inside the pixel electrode **150** or the common electrode block **180**.

In this way, when the slit **190** is disposed inside the pixel electrode **150** or the common electrode block **180**, a fringe field may be generated between the pixel electrode **150** and the common electrode block **180** through the slit **190**, and liquid crystal may be driven with the fringe field. That is, an LCD device may be implemented in a fringe field switching mode.

When the slit **190** is disposed inside the common electrode block **180**, the plurality of common electrode blocks **180** are formed on the pixel electrode **150** with a second protective layer **170** therebetween (see FIG. **7**).

On the other hand, when the slit **190** is disposed inside the pixel electrode **150**, the pixel electrode **150** is formed on the common electrode block **180** with the second protective layer **170** therebetween (see FIG. **5**).

The upper substrate **200** is facing-coupled to the lower substrate **100**, and a liquid crystal layer is formed between the upper substrate **200** and the lower substrate **100**.

Although not shown, a high-resistance conductive layer (not shown) may be formed at a rear surface of the upper substrate **200**. The high-resistance conductive layer is a transparent material that passes through light incident from a liquid crystal panel, and is formed of a conductive material having conductivity for grounding an electric charge (which is generated with static electricity on the liquid crystal panel) to a ground pad (not shown) formed in the lower substrate **100**. The high-resistance conductive layer is formed to have a high resistance (for example, 50 MΩ/sqr to 5 GΩ/sqr), for enhancing performance to detect a user's touch.

The high-resistance conductive layer allows an electric charge generated in the liquid crystal panel to flow to the ground (GND), thereby enhancing the electrostatic discharge (ESD) shielding performance of an LCD device with built-in touch electrodes.

That is, as described above, the high-resistance conductive layer is formed of a high-resistance material having a resistance value of 50 MΩ/sqr to 5 GΩ/sqr, and prevents the shielding of the influence of a user's finger, thus enhancing the touch detection performance of an LCD device with a built-in touch screen.

The multiplexer (MUX) **300** is coupled between the sensing line **160** and the sensing circuit part **400**, and reduces the number of sensing lines **160** disposed in the sensing circuit part **400**.

In FIG. **2**, a 4:1 multiplexer **300** is illustrated as an example, but is not limited thereto. A multiplexer **300** having various combinations such as a 8:1 multiplexer or a 16:1 multiplexer may be used.

When the multiplexer **300** is used, the number of sensing lines **160** disposed in the sensing circuit part **400** is reduced, and thus, the Bexel width is reduced, and the aperture ratio of an outer portion increases.

The multiplexer **300** may be formed on the lower substrate **100** with the sensing line **160** formed therein, built in a driving IC, or implemented as a separate multiplexer **300** chip.

The sensing circuit part **400** is connected directly to the sensing line **160** or connected to the sensing line **160** through the multiplexer **300**, and, when a user touches the common electrode block **180**, the sensing circuit part **400** senses whether there is a touch and a touched position, with a signal applied along the sensing line **160**.

Hereinafter, various embodiments of the present invention will be described in more detail with reference to FIGS. **5** to **10** illustrating a sectional structure of the LCD device according to the present invention.

FIG. **5** is a view illustrating a first embodiment corresponding to a sectional surface taken along line A-A of FIG. **4**. FIG. **6** is a view illustrating a first embodiment corresponding to a sectional surface taken along line B-B of FIG. **4**.

As seen FIGS. **5** and **6**, an LCD device according to the first embodiment of the present invention includes a lower substrate **100**, a gate electrode **110**, a gate dielectric **120**, a semiconductor layer **130**, an etch stopper **133**, a source electrode **135**, a drain electrode **137**, a first protective layer **140**, a pixel electrode **150**, a sensing line **160** (see FIG. **4**), a pad part **163**, a contact part **165**, a second protective layer **170**, and a common electrode block **180**. The LCD device has a pixel electrode top structure in which the pixel electrode **150** is formed on the common electrode block **180**.

The lower substrate **100** may be formed of glass or transparent plastic.

The gate electrode **110** branches from a gate line **102** formed on the lower substrate **100**, and is formed of a conductive material.

The gate dielectric **120** is formed on the gate electrode **110**, and may be formed of SiOx or SiNx.

The semiconductor layer **130** is formed at a portion corresponding to the gate electrode **110**, on the gate dielectric **120**. When a gate voltage is applied to the gate electrode **110**, a channel that enables a current to flow between the

source electrode **135** and the drain electrode **137** is formed. The semiconductor layer **130** may be oxide or amorphous semiconductor.

The etch stopper **133** is formed on the semiconductor layer **130**, and protects the semiconductor layer **130**. The etch stopper **133** may be formed of SiOx or SiNx. However, depending on the case, the etch stopper **133** may not be provided.

The source electrode **135** is formed to be extended from the data line **104**, and formed of a low-resistance conductor for minimizing the operation delay of a TFT due to a pane load.

The drain electrode **137** is formed apart from the source electrode **135**, on the semiconductor layer **130**. The drain electrode is formed of a conductor, which may be a transparent conductor such as ITO.

The first protective layer **140** is formed on the source electrode **135** and the drain electrode **137**, and may be formed of SiOx or SiNx.

The common electrode block **180** is formed on the first protective layer **140**. Here, a plurality of the common electrode blocks **180** may be formed at certain intervals, for preventing the pixel electrode **150** and the common electrode block **180** from being electrically short-circuited in the position of a pixel electrode contact hole **155** later.

The second protective layer **170** is formed on the common electrode block **180**, and may be formed of SiOx or SiNx.

The sensing line **160** (see FIG. **4**), the pad part **163**, and the contact part **165** are formed on the second protective layer **170**. The pad part **163** and common electrode block **180** included in the sensing line **160** (see FIG. **4**) are electrically connected through the contact part **165**.

In this case, in FIG. **5** illustrating a sectional view taken along line A-A of FIG. **4**, the contact part **165** is formed under the pad part **163**. However, in FIG. **6** illustrating a sectional view taken along line B-B of FIG. **4**, the contact part **165** may not be provided. This, as described above, is because when one sensing line is electrically connected to one common electrode block **180**, the one sensing line is insulated from the other common electrode blocks **180**, and thus, the contact part **165** is not formed under all of the pad parts **163**.

The line widths D**1** and D**2** of the pad part **163** may be equal, irrespective of whether the contact part **165** is formed. This, as described above, is because when the pad part **163** formed along a sensing line is not disposed at a symmetric position or the line widths of the pad part **163** differ, a stain is formed on the display panel.

The pixel electrode **150** is formed apart from the pad part **163**, on the second protective layer **170**. The pixel electrode **150** is electrically connected to the drain electrode **137** through the pixel electrode contact hole **155**.

In this case, a slit **190** is disposed inside the pixel electrode **150**. A fringe field may be generated between the pixel electrode **150** and the common electrode block **180** through the slit **190**, and liquid crystal may be driven with the fringe field. That is, an LCD device may be implemented in a fringe field switching mode.

FIG. **7** is a view illustrating a second embodiment corresponding to a sectional surface taken along line A-A of FIG. **4**. FIG. **8** is a view illustrating a second embodiment corresponding to a sectional surface taken along line B-B of FIG. **4**.

As seen FIGS. **7** and **8**, an LCD device according to the second embodiment of the present invention includes a lower substrate **100**, a gate electrode **110**, a gate dielectric **120**, a semiconductor layer **130**, an etch stopper **133**, a source electrode **135**, a drain electrode **137**, a first protective layer **140**, a pixel electrode **150**, a sensing line **160** (see FIG. **4**), a pad part **163**, a contact part **165**, a second protective layer **170**, and a common electrode block **180**. The LCD device has a common electrode block **180** top structure in which the common electrode block **180** is formed on the pixel electrode **150**. Except for the common electrode block **180** top structure, the embodiment of the FIGS. **7** and **8** is the same as the embodiment of FIGS. **5** and **6**, and thus, a repetitive description is not provided.

The pixel electrode **150** is formed on the first protective layer **140**, and may be formed of a transparent conductor such as ITO. The pixel electrode **150** is electrically connected to the drain electrode **137** through a pixel electrode contact hole **155** formed on the first protective layer **140**.

The pad part **163** is formed apart from the pixel electrode **150**, on the same layer as that of the pixel electrode **150**. The pad part **163** may be formed of one selected among from Mo, Al, and Cu, or an alloy thereof.

The second protective layer **170** is formed on the pixel electrode **150** and the pad part **163**, and may be formed of SiOx or SiNx.

The common electrode block **180** is formed on the second protective layer **170**, and may be formed of a transparent conductor such as ITO. The common electrode block **180** is electrically connected to the pad part **163** through the contact part **165**.

In this case, it can be seen that the contact part **165** is formed on the pad part **163** in FIG. **7** but the contact part **165** is not provided in FIG. **8**. As described above, when one sensing line is electrically connected to one common electrode block **180**, the one sensing line is insulated from the other common electrode blocks **180**, and thus, the contact part **165** is not formed on all of the pad parts **163**.

The line widths D**3** and D**4** of the pad part **163** may be equal, irrespective of whether the contact part **165** is formed. This, as described above, is because when the pad part **163** formed along a sensing line is not disposed at a symmetric position or the line widths of the pad part **163** differ, a stain is formed on the display panel.

In this case, a slit **190** is disposed inside the common electrode block **180**. A fringe field may be generated between the pixel electrode **150** and the common electrode block **180** through the slit **190**, and liquid crystal may be driven with the fringe field. That is, an LCD device may be implemented in a fringe field switching mode.

FIG. **9** is a view illustrating a third embodiment corresponding to a sectional surface taken along line A-A of FIG. **4**. FIG. **10** is a view illustrating a third embodiment corresponding to a sectional surface taken along line B-B of FIG. **4**.

As seen FIGS. **9** and **10**, an LCD device according to the third embodiment of the present invention includes a lower substrate **100**, a gate electrode **110**, a gate dielectric **120**, a semiconductor layer **130**, an etch stopper **133**, a source electrode **135**, a drain electrode **137**, a first protective layer **140**, a pixel electrode **150**, a sensing line **160** (see FIG. **4**), a pad part **163**, a contact part **165**, a second protective layer **170**, and a common electrode block **180**. The LCD device has a common electrode block **180** top structure in which the common electrode block **180** is formed on the pixel electrode **150**. Except for the vertical structure of the pixel electrode **150** and the pad part **163**, the embodiment of the FIGS. **9** and **10** is the same as the embodiment of FIGS. **7** and **8**, and thus, a repetitive description is not provided.

The pixel electrode **150** is formed under the pad part **163**. That is, the pad part **163** is formed on the pixel electrode

150, but the pixel electrode 150 overlapping the pad part 163 is electrically insulated from the pixel electrode 150 electrically connected to the drain electrode 137.

Such a structure may be realized as follows. The pixel electrode 150 is formed by a photolithography process, and then, the sensing line 160 (see FIG. 4) and the pad part 163 are formed by a separate photolithography process, thereby realizing the structure. However, the structure may be efficiently realized using a half tone mask process.

That is, when the pixel electrode 150 and the sensing line 160 are simultaneously formed in one photolithography process by using the half tone mask process, the present invention can simplify a two-mask process to a one-mask process, for forming the pixel electrode 150 and the sensing line 160.

Accordingly, by performing one-time exposure process instead of two-time exposure process, a tack time is shortened, and the cost of materials used in an exposure process is saved.

<Method of Manufacturing LCD Device>

FIGS. 11A to 11C are sectional views illustrating a method of manufacturing an LCD device according to an embodiment of the present invention.

First, as seen in FIG. 11A, the gate electrode 110, the gate dielectric 120, the semiconductor layer 130, the etch stopper 133, the source electrode 135, the drain electrode 137, and the first protective layer 140 are sequentially formed on the lower substrate 100. Although not shown, the gate line 101 and the data line 104 are formed in the lower substrate 100.

Subsequently, as seen in FIG. 11B, the pixel electrode contact hole 155 is formed on the first protective layer 140, and then, by forming the pixel electrode 150, the drain electrode 137 is electrically connected to the pixel electrode 150. Also, the sensing line 160 is formed at a certain position.

The sensing line 160 may be formed in a direction parallel to the gate line 102 or a direction parallel to the data line 104. According to the present invention, although the sensing line 160 may be formed in a direction parallel to the gate line 102 or a direction parallel to the data line 104, a user's touch position is detected on the X-Y coordinate plane.

In this case, an aperture ratio is reduced due to the sensing line 160. To overcome this limitation, the sensing line 160 formed in parallel to the data line 104 may overlap the data line 104, and moreover, the sensing line 160 formed in parallel to the gate line 102 may overlap the gate line 102.

A plurality of the sensing lines 160 are separated from each other at certain intervals, and each of the sensing lines 160 includes a plurality of the pad parts 163 (see FIG. 3) having a line width thicker than that of the sensing line 160.

Subsequently, as seen in FIG. 11C, the second protective layer 170 is formed on the pixel electrode 150 and the sensing line 160, and then, by forming the contact part 165, the sensing line 160 is electrically connected to the common electrode block 180.

In this case, when the sensing line 160 is electrically connected to one of a plurality of the common electrode blocks 180, the sensing line 160 is electrically insulated from the other common electrode blocks 180, and thus, the contact part 165 is formed at a position at which one sensing line 160 is electrically connected to one common electrode block.

By forming the common electrode block 180 on the second protective layer 170, the sensing line 160 is electrically connected to the common electrode block 180.

Since the common electrode block 180 is used as a sensing electrode, the common electrode block 180 is formed in plurality to have a certain pattern. The common electrode block 180 may be formed to a size corresponding to one or more pixels, and particularly, how many pixels the size of the common electrode block 180 corresponds to depends on the touch resolution of the LCD device.

<Method of Manufacturing LCD Device Formed with Half Tone Mask>

FIGS. 12A to 12C are sectional views illustrating a method of manufacturing an LCD device according to another embodiment of the present invention. The following description will focus on a configuration that is not repetitive of FIGS. 11A and 11C.

First, as seen in FIG. 12A, the gate electrode 110, the gate dielectric 120, the semiconductor layer 130, the etch stopper 133, the source electrode 135, the drain electrode 137, and the first protective layer 140 are sequentially formed on the lower substrate 100. The pixel electrode contact hole 155 is formed on the first protective layer 140.

Subsequently, as seen in FIG. 12B, a pixel electrode layer 150a and a sensing line layer 140a are sequentially stacked on the first protective layer 140.

A photoresist is stacked on the pixel electrode layer 150a and the sensing line layer 140a, and irradiates light using a half tone mask 700. Here, the half tone mask 700 includes a non-transmissive area 710 incapable of transmitting light, a semi-transmissive area 720 that transmits only partial light, and a transmissive areas 730a to 730c that transmits entire light.

Subsequently, a photoresist pattern is formed by developing the photoresist. In the photoresist pattern, a photoresist layer corresponding to the non-transmissive area 710 of the half tone mask 700 is left as-is, a photoresist layer corresponding to the semi-transmissive area 720 of the half tone mask 700 is partially left, and a photoresist layer corresponding to the transmissive area 730a to 730c of the half tone mask 700 is all removed.

Subsequently, as seen in FIG. 12C, the pixel electrode layer 150a and the sensing line layer 140a are etched using the photoresist pattern as a mask. An ashing process is performed on the photoresist pattern, and then, an etching process is performed on the photoresist pattern, thereby finally removing the photoresist pattern.

When the pixel electrode 150 and the sensing line 160 are formed in this way, a process of irradiating light is not performed twice but is performed once, thus saving the manufacturing time and cost.

Subsequently, as seen in FIG. 12D, the second protective layer 170 is formed on the pixel electrode 150 and the sensing line 160, and the common electrode block 180 is pattern-formed on the second protective layer 170.

According to the present invention, the common electrode (or common electrode block) which is used to generate an electric field for driving liquid crystal is used as the sensing electrode for sensing a user's touch, and thus, unlike the related art, it is not required to separately dispose the touch screen at the top of the liquid crystal panel, thereby decreasing the thickness of the LCD device, simplifying a manufacturing process, and saving the manufacturing cost.

Moreover, according to the present invention, a user's touch position is detected on the X-Y plane by using only the sensing line which is formed to be extended only in one direction of the lower substrate, and thus, the present invention can simplify the structure of the LCD device and save the cost compared to the related art LCD device in which sensing lines are formed in two directions (i.e., the X-axis direction and the Y-axis direction).

Moreover, according to the present invention, the number of sensing lines disposed inside the sensing circuit part is reduced by using the multiplexer, thus decreasing the Bezel width and increasing the aperture ratio of an outer portion.

Moreover, according to the present invention, by forming the sensing line including the pad part having a constant line width irrespective of the contact part, a stain on the surface of the display panel is removed.

It will be apparent to those skilled in the art that various modifications and variations can be made in the present invention without departing from the spirit or scope of the inventions. Thus, it is intended that the present invention covers the modifications and variations of this invention provided they come within the scope of the appended claims and their equivalents.

What is claimed is:

1. A liquid crystal display (LCD) device, comprising:

a plurality of gate lines and data lines cross-arranged on a lower substrate to define a plurality of pixels;

a pixel electrode in each of the pixels;

a plurality of common electrode blocks pattern-formed that generate an electric field with the pixel electrode and sensing a touch of a user;

a plurality of sensing lines, wherein when the sensing lines are electrically connected to one of the common electrode blocks, the sensing lines are electrically insulated from the other common electrode blocks;

a plurality of pad parts arranged to be separated from each other at predetermined intervals along a corresponding sensing line, and having a line width thicker than the sensing line; and

a contact part disposed between a corresponding pad part and a corresponding common electrode block, and electrically connecting a corresponding sensing line and the common electrode block,

wherein the contact part is formed to contact at least one or more of a plurality of the pad parts comprised in a corresponding sensing line which is electrically connected to one of the common electrode blocks.

2. The LCD device of claim **1**, wherein a pad part disposed in a corresponding sensing line is arranged at a position symmetric with a pad part formed in a sensing line adjacent to the corresponding sensing line.

3. The LCD device of claim **1**, wherein each of the sensing lines overlaps a corresponding data line or a corresponding gate line.

4. The LCD device of claim **1**, wherein each of the sensing lines is disposed in a direction parallel to a corresponding data line or a direction parallel to a corresponding gate line.

5. The LCD device of claim **1**, wherein each of the pad parts has a constant line width irrespective of whether each pad part is electrically connected to the contact part.

6. The LCD device of claim **1**, wherein the contact part is disposed in a non-transmissive area, for preventing a reduction in an aperture ratio.

7. The LCD device of claim **1**, wherein the common electrode blocks are disposed on the pixel electrode with a **[**second**]** protective layer therebetween, and comprises at least one slit.

8. The LCD device of claim **1**, wherein the pixel electrode is disposed on the common electrode block with a **[**second**]** protective layer therebetween, and comprises at least one slit.

9. The LCD device of claim **1**, wherein a multiplexer is connected to a distal end of each of the sensing lines.

10. A method of manufacturing a liquid crystal display (LCD) device, comprising:

sequentially forming a gate electrode, a gate dielectric, a semiconductor layer, a source electrode, a drain electrode, and a first protective layer on a lower substrate; and

forming a pixel electrode electrically connected to the drain electrode, a plurality of common electrode blocks pattern-formed for generating an electric field with the pixel electrode and sensing a touch of a user, a plurality of sensing lines, a plurality of pad parts formed to be separated from each other at predetermined intervals along a corresponding sensing line and having a line width thicker than the sensing line, and a contact part formed between a corresponding pad part and a corresponding common electrode block and electrically connecting a corresponding sensing line and the common electrode block, wherein when the sensing lines are electrically connected to one of the common electrode blocks, the sensing lines are electrically insulated from the other common electrode blocks,

wherein the contact part is formed to contact at least one or more of a plurality of the pad parts that are formed in an area overlapping a corresponding common electrode block and a corresponding sensing line are electrically connected.

11. A display device, comprising:

a plurality of gate lines, a plurality of data lines crossing the gate lines, and a plurality of pixel electrodes in a display panel;

a plurality of common electrode blocks, the common electrode blocks including a first common electrode block configured to generate an electric field with at least one of the pixel electrodes and to sense a touch;

a plurality of sensing lines, the sensing lines including a first sensing line electrically connected to the first common electrode block and insulated from the other common electrode blocks in an area of the display panel where the other common electrode blocks are disposed, the first sensing line having a first pad part; and

a first contact part electrically connected between the first pad part and the first common electrode block to electrically connect the first sensing line to the first common electrode block,

wherein the first contact part contacts the first pad part.

12. The display device of claim 11, wherein the first sensing line includes a plurality of pad parts, including the first pad part, the pad parts being wider than other parts of the first sensing line.

13. The display device of claim 12, wherein each of the pad parts has a same width irrespective of whether the respective pad part contacts the first contact part.

14. The display device of claim 12, further comprising a plurality of contact parts, including the first contact part,

wherein each of the contact parts contacts a corresponding one of the pad parts of the first sensing line to electrically connect the first sensing line to the first common electrode block.

15. The display device of claim 14, wherein at least one of the pad parts of the first sensing line does not contact any of the contact parts.

16. The LCD device of claim 11, wherein the first contact part is connected directly between the first pad part and the first common electrode block.

17. The display device of claim 11, wherein each of the sensing lines overlaps a corresponding one of the data lines or a corresponding one of the gate lines.

18. The display device of claim 11, wherein each of the sensing lines is disposed in a direction parallel to a corresponding one of the data lines or a direction parallel to a corresponding one of the gate lines.

19. The display device of claim 11, wherein the first contact part is disposed in a non-transmissive area of the display panel to prevent a reduction in an aperture ratio.

20. The display device of claim 11, further comprising a first protective layer,

wherein the first protective layer is on the first common electrode block, and the first sensing line is on the first protective layer.

21. The display device of claim 11, further comprising a first protective layer,

wherein the first protective layer is on the first sensing line, and the first common electrode block is on the first protective layer.

22. The display device of claim 11, further comprising a second protective layer,

wherein the first common electrode block is on the second protective layer, and the second protective layer is on the at least one of the pixel electrodes, and

wherein the first common electrode block includes at least one slit.

23. The display device of claim 11, further comprising a second protective layer,

wherein the at least one of the pixel electrodes is on the second protective layer, and the second protective layer is on the first common electrode block, and

wherein the at least one of the pixel electrodes includes at least one slit.

24. The display device of claim 11, wherein the first sensing line is formed of a material having a lower resistivity than a material of the first common electrode block.

25. The display device of claim 11, further comprising a high-resistance conductive layer on the display panel,

wherein the high-resistance conductive layer includes a transparent material and is formed of a conductive material.

26. The display device of claim 11, further comprising a multiplexer and a sensing circuit,

wherein the multiplexer is coupled between the sensing lines and the sensing circuit.

27. The display device of claim 11, further comprising a sensing circuit configured to detect a signal from the first common electrode block through the first sensing line to sense a touch.

28. The display device of claim 11, wherein the sensing lines include a second sensing line overlapping with the first common electrode block and insulated from the first common electrode block in an area of the first common electrode block, and

wherein the common electrode blocks include a second common electrode block, the second common electrode block being electrically connected with the second sensing line.

* * * * *