J. DAHLBERG.

FLAGPOLE.

APPLICATION FILED OCT. 29, 1914.

1,148,362. Patented July 27, 1915.

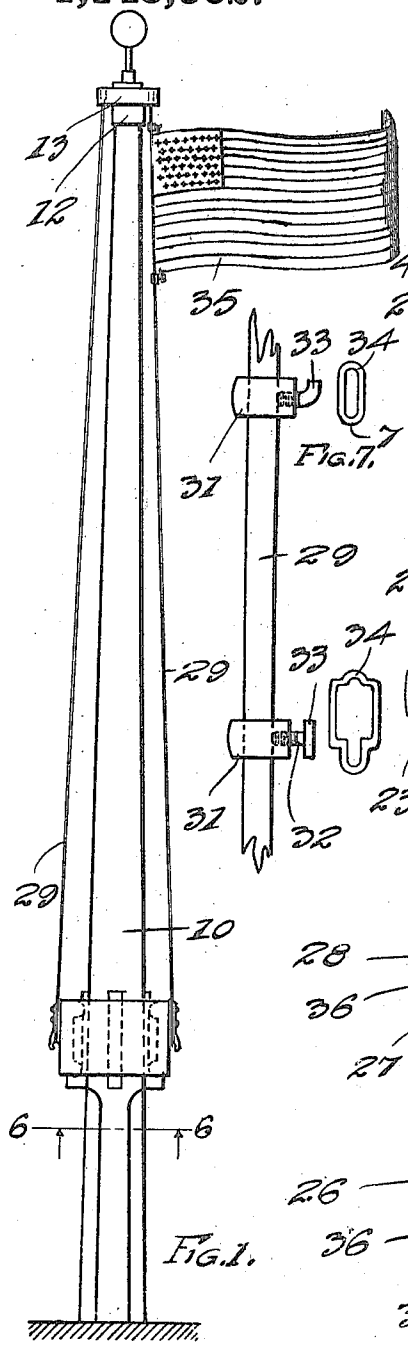

Fig. 1.

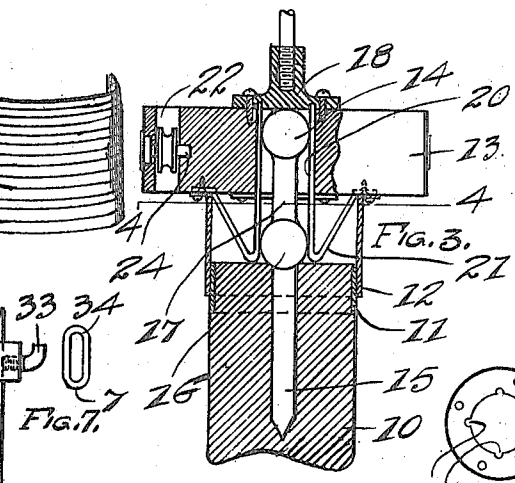

Fig. 3.

Fig. 7.

Fig. 8.

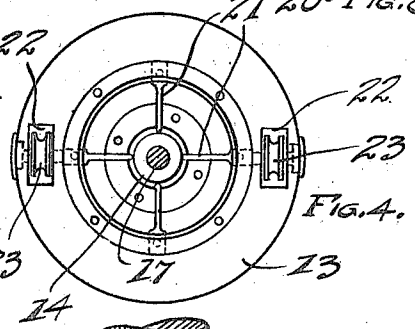

Fig. 4.

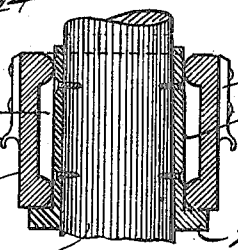

Fig. 5.

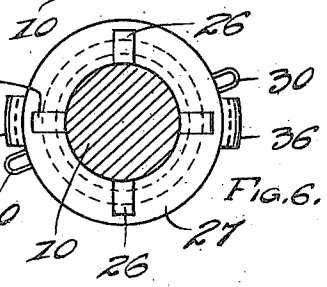

Fig. 6.

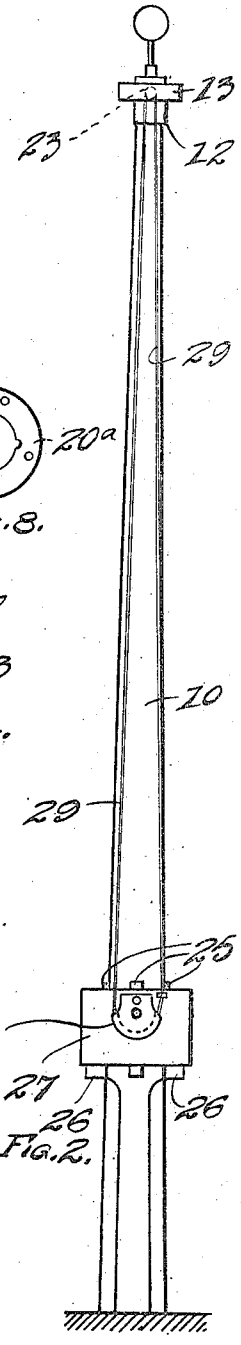

Fig. 2.

WITNESSES:

Coby. Smedstad.

Ed. B. Walley.

INVENTOR

J. Dahlberg.

BY

Randolph & Co.

ATTORNEY

UNITED STATES PATENT OFFICE.

JOHN DAHLBERG, OF SAN FRANCISCO, CALIFORNIA.

FLAGPOLE.

1,148,362. Specification of Letters Patent. Patented July 27, 1915.

Application filed October 29, 1914. Serial No. 869,277.

To all whom it may concern:

Be it known that I, JOHN DAHLBERG, a citizen of the United States, residing at 758 Harrison street, San Francisco, in the county of San Francisco and State of California, have invented certain new and useful Improvements in Flagpoles; and I do hereby declare the following to be a full, clear, and exact description of the invention, such as will enable others skilled in the art to which it appertains to make and use the same.

This invention has for its object to provide a flag pole embodying novel and efficient means for yieldably tensioning the flag wire or cable.

Another object is the provision of an efficient device for rotatably securing the flag wire or cable to the pole so as to permit the flag to circle about the pole as the wind changes without danger of the wire or cable becoming wound about the pole.

With these and other objects in view, the invention consists in the novel construction, arrangement and formation of parts as will be hereinafter specifically described, claimed and illustrated in the accompanying drawing, in which:—

Figure 1 represents a front elevation of the flag pole. Fig. 2 represents a side elevation thereof. Fig. 3 represents an enlarged detail sectional view, partly broken away, of the upper portion of the pole. Fig. 4 represents a detail sectional view on the line 4—4 of Fig. 3. Fig. 5 represents an enlarged detail sectional view of the lower securing member of the pole. Fig. 6 represents a horizontal sectional view on the line 6—6 of Fig. 1. Fig. 7 represents enlarged detail views of the attaching means for the flag, and Fig. 8 represents a top plan view of one of the parts of the pole removed.

Referring to the drawing in detail, wherein similar reference numerals designate corresponding parts throughout the several views, the numeral 10 indicates a flag pole of any preferred construction around the upper end of which is secured a band 11 of metal for strengthening the upper end of the pole and preventing the latter from splitting. A sleeve 12 is telescopically engaged over the band 11 and is formed with an outwardly directed upper end secured to the under side of a block 13 of cylindrical formation and having a central opening receiving the spherical head 14 carried by the shank 15 secured in the upper end of the pole 10. Intermediate the spherical head 14 and the shank 15 is formed a spherical enlargement 16 separated from the head 14 by the reduced portion 17. A bearing plate 18 is secured over the upper end of the central opening in the block 13 and engages the top of the spherical head 14 to support the block 13 in position.

The bottom face of the bearing member 18 is formed with a plurality of recesses arranged concentrically relative to the point of contact of the spherical head 14 therewith. The upper extremities of a plurality of rods 20 are received within the recesses in the bottom face of the bearing plate 18 and the lower extremities thereof are directed angularly as is shown at 21 and secured to the bottom face of the block 13. The lower portions of the rods 20 engage the face of the spherical enlargement 16 and prevent the block 13 from tilting out of a horizontal position. An annular plate 20^a is secured to the lower face of the block 13 and is formed with a plurality of recesses 20^b forming seats for the vertical portions of the rods 20 to prevent the latter from moving out of proper relative position. Openings 22 are formed vertically through the block 13 at diametrically opposed points and sheaves or pulleys 23 are rotatably mounted therein on suitable shafts 24.

A plurality of bearing members 25 are secured adjacent the lower end of the pole 10 and are formed with outwardly directed lower ends 26 supporting the sleeve 27 having an annular groove 28 in its inner face to reduce the friction with the vertical portions of the bearing members 25. The sleeve 27 is rotatably supported upon the outwardly directed ends 26 of the bearing members 25 and is vertically slidable on the latter.

Endless cables or wires 29 are extended over the diametrically opposed pulleys 23 and are positioned, at their lower portions, through eyes 30 secured to the sleeve 27. A pair of sleeves 31 are adjustably positioned on each of the cables 29 and are provided with set screws 32 whereby the sleeves are secured in adjusted position. Each set screw is provided with an angularly directed head 33 adapted to coöperate with the eyes 34 carried by the flag 35 to secure the latter in position on the cable.

A pair of diametrically opposed hooks 36 are secured to the sleeve 27 and are adapted, when the cables 29 are engaged thereover, to hold said cable taut.

What I claim is:

1. A device of the character described comprising a pole, a shank secured in said pole, a spherical enlargement on said shank and a spherical head separated from said spherical enlargement by a reduced portion, a block having a central opening rotatably receiving said spherical head, a bearing plate secured over the upper end of said opening engaging said spherical head, and a plurality of rods extending downwardly from said bearing plate and engaging said spherical head and said spherical enlargement and having the lower extremities directed outwardly and upwardly and secured to the under face of said block, and a sleeve secured to the underface of said block telescopically receiving the upper end of said pole.

2. A device of the character described comprising a pole, a block arranged over said pole, a shank secured in said pole, a spherical enlargement on said shank disposed between said block and said pole, and a plurality of rods extending downwardly from said block, engaging said spherical enlargement and having the lower extremities directed outwardly and upwardly and secured to the under face of said block.

3. A device of the character described comprising a pole, a shank secured in said pole, a spherical enlargement on said shank and a spherical head separated from said spherical enlargement by a reduced portion, a block having a central opening rotatably receiving said spherical head, a bearing plate secured over the upper end of said opening engaging said spherical head, and a plurality of rods extending downwardly from said bearing plate, engaging said spherical head and said spherical enlargement and having the lower extremities directed outwardly and upwardly and secured to the under face of said block.

In testimony whereof I affix my signature in presence of two witnesses.

JOHN DAHLBERG.

Witnesses:
J. C. KAIGHIN,
E. B. WALLEY.

Copies of this patent may be obtained for five cents each, by addressing the "Commissioner of Patents, Washington, D. C."