Re. 24378

Oct. 11, 1955 O. E. HILL 2,720,063

MULTIPLE WHEEL GRINDING MACHINE

Filed May 29, 1953 4 Sheets-Sheet 1

Fig. 1

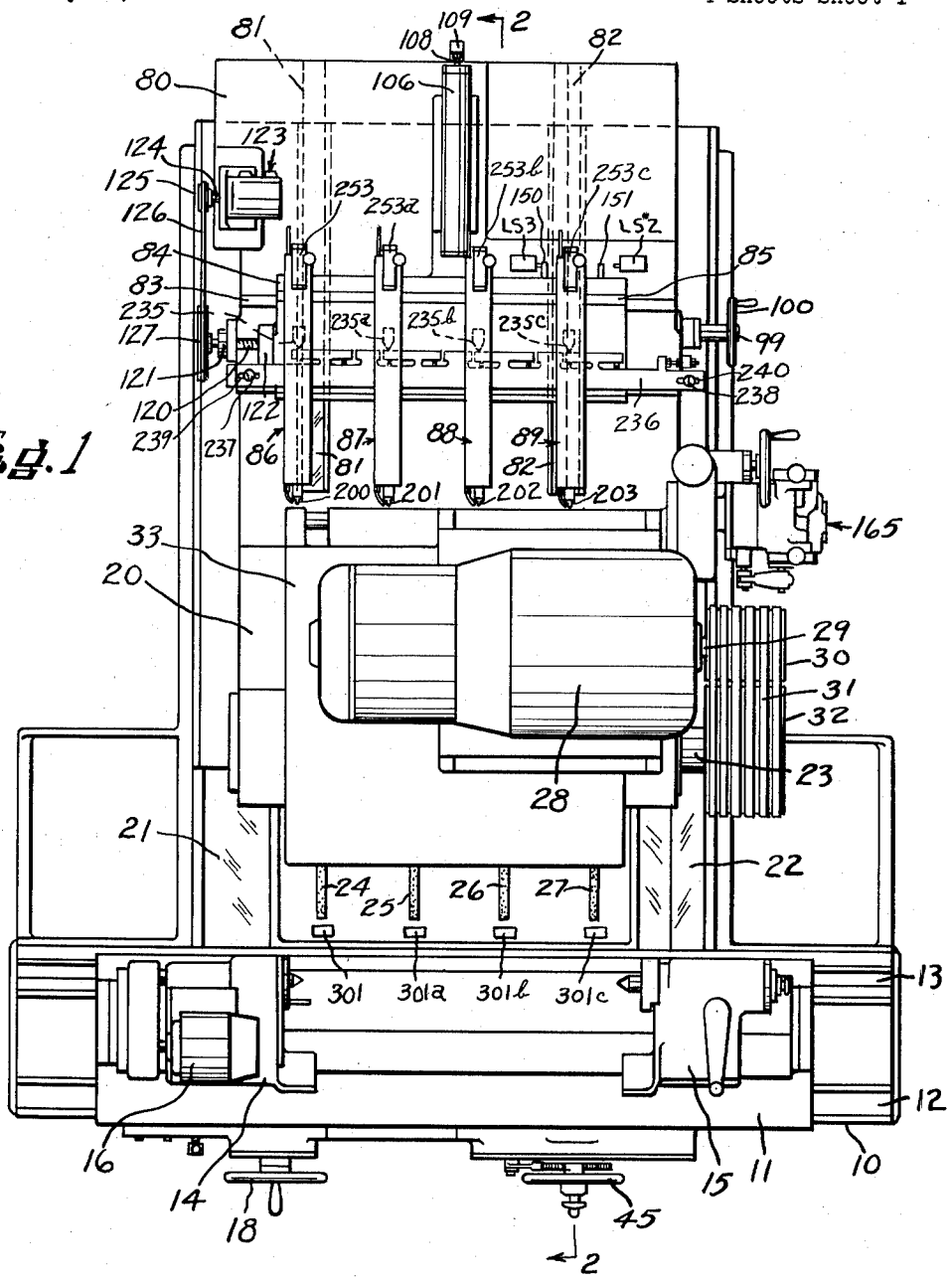

INVENTOR.
OIVA E. HILL

BY
Harold W. Eaton
ATTORNEY

Oct. 11, 1955 O. E. HILL 2,720,063

MULTIPLE WHEEL GRINDING MACHINE

Filed May 29, 1953 4 Sheets-Sheet 2

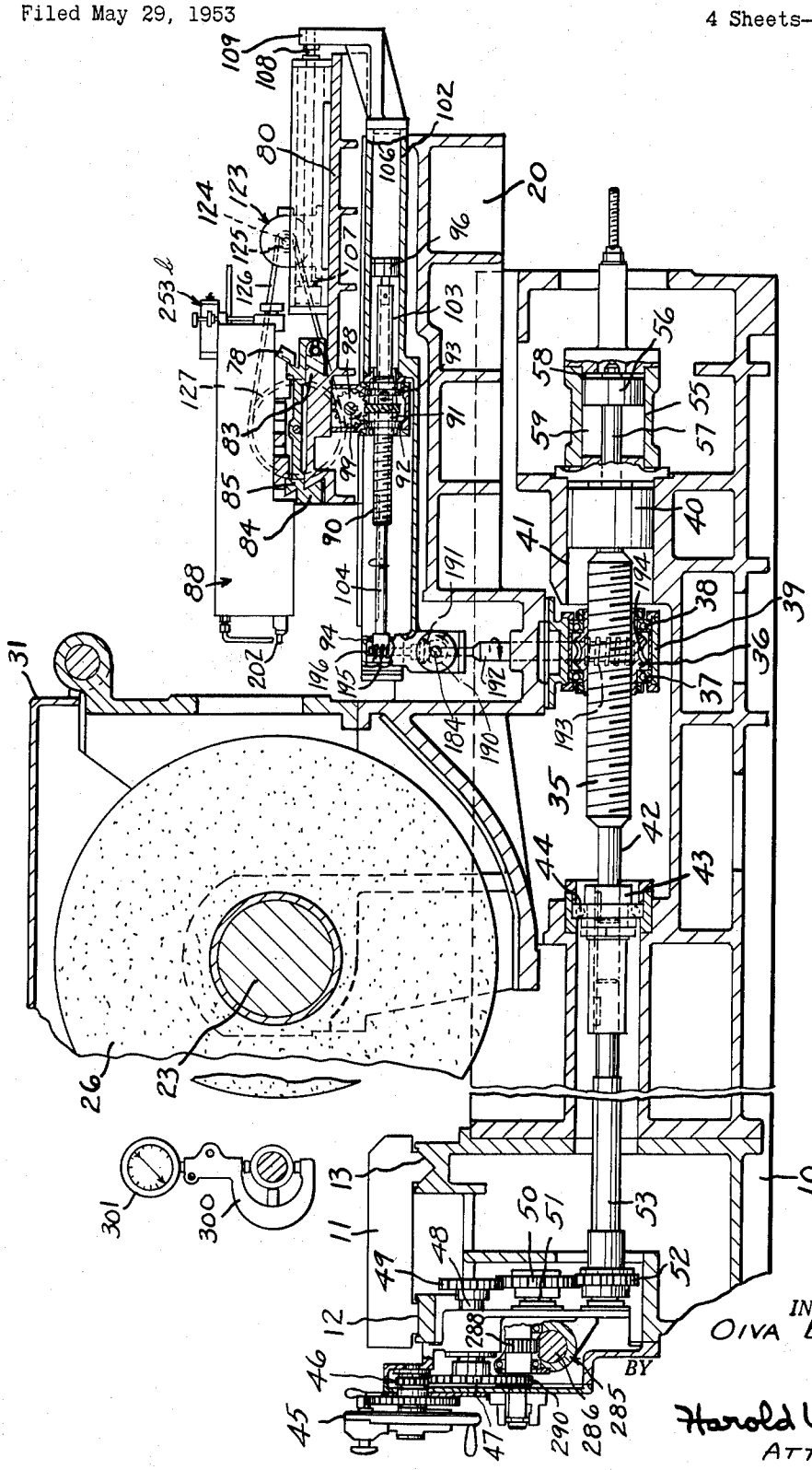

Fig. 2

INVENTOR.
OIVA E. HILL

BY
Harold W. Eaton
ATTORNEY

Oct. 11, 1955 O. E. HILL 2,720,063

MULTIPLE WHEEL GRINDING MACHINE

Filed May 29, 1953 4 Sheets-Sheet 3

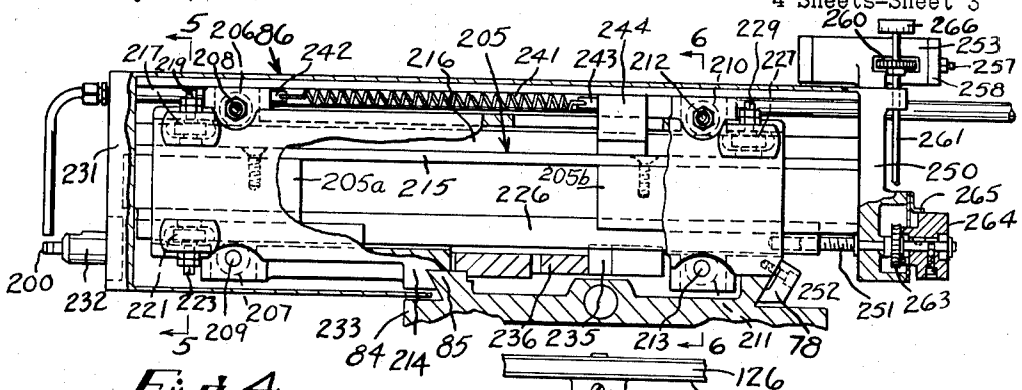

Fig. 4

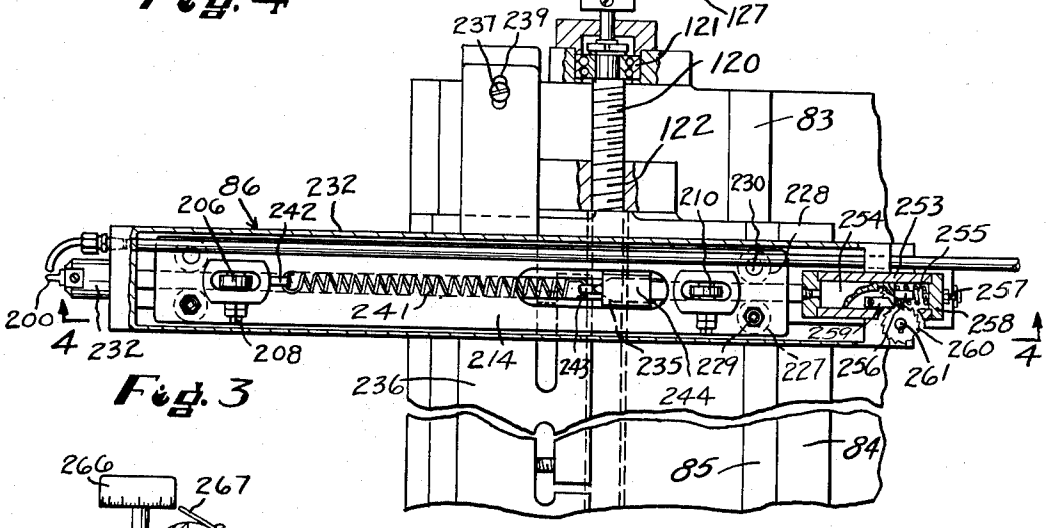

Fig. 3

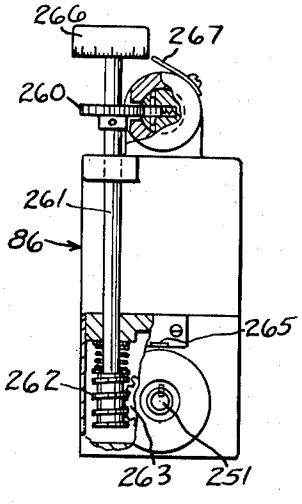

Fig. 7

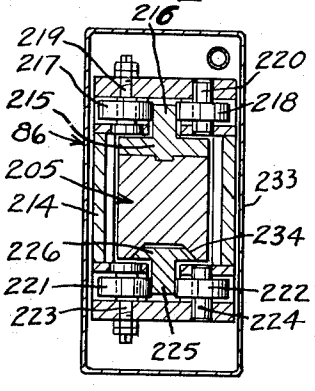

Fig. 5

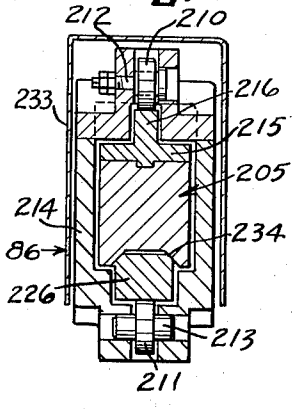

Fig. 6

INVENTOR.
OIVA E. HILL
BY
Harold W. Eaton
ATTORNEY

Oct. 11, 1955 O. E. HILL 2,720,063

MULTIPLE WHEEL GRINDING MACHINE

Filed May 29, 1953 4 Sheets-Sheet 4

Fig. 8

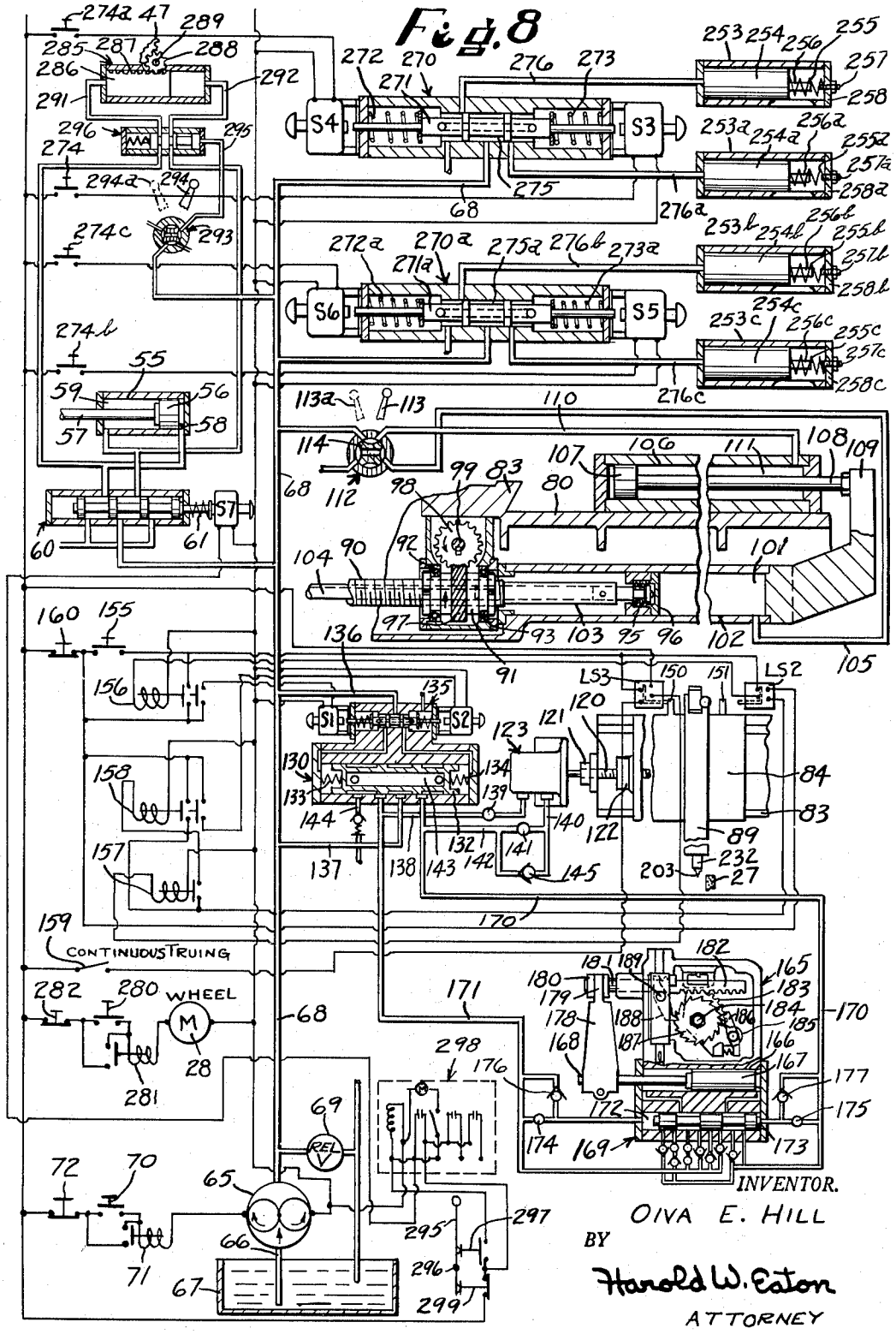

United States Patent Office 2,720,063 Patented Oct. 11, 1955

2,720,063

MULTIPLE WHEEL GRINDING MACHINE

Oiva E. Hill, Worcester, Mass., assignor to Norton Company, Worcester, Mass., a corporation of Massachusetts

Application May 29, 1953, Serial No. 358,337

12 Claims. (Cl. 51—165)

The invention relates to grinding machines, and more particularly to a cylindrical-type multiple wheel grinding machine.

One object of the invention is to provide a simple and thoroughly practical multiple wheel grinding machine for simultaneously grinding a plurality of spaced cylindrical portions on a work piece. Another object is to provide a multiple wheel truing apparatus for simultaneously truing a plurality of spaced grinding wheels. Another object is to provide a feed compensating mechanism simultaneously to advance a plurality of truing tools and to impart a compensating adjustment to the wheel feeding mechanism so that grinding may be resumed after a truing operation without the necessity of resetting the wheel feeding mechanism. Another object of the invention is to provide an independent truing tool feeding mechanism whereby each of the truing tools may be incrementally adjusted to compensate for wheel wear caused by grinding or diamond wheel wear caused by truing operations. Another object is to provide a hydraulically operated feeding mechanism on each of a plurality of truing tool units which may be remotely controlled from the control station for independently imparting a compensating adjustment to each of the truing tools as desired. A further object of the invention is to provide a truing apparatus including a plurality of truing tool units each of which is provided with a truing tool slide movable toward and from the grinding wheel axis as controlled by a forming bar and a follower during a longitudinal traversing movement of the truing tool units.

Other objects will be readily apparent from the foregoing disclosure.

One embodiment of the invention has been illustrated in the drawings in which:

Fig. 1 is a plan view of the improved multiple wheel grinding machine;

Fig. 2 is a vertical sectional view, on an enlarged scale, taken approximately on the line 2—2 of Fig. 1, through the wheel feeding and truing mchanism;

Fig. 3 is a horizontal sectional view of an enlarged scale, through one of the wheel truing units, showing the forming bar and the traversing mechanism for the truing apparatus slide;

Fig. 4 is a fragmentary sectional view, taken approximately on the line 4—4 of Fig. 3, showing a truing tool unit in elevation with parts broken away and shown in section;

Fig. 5 is a vertical sectional view, on an enlarged scale, taken approximately on the line 5—5 of Fig. 4, through one of the sets of roller suports for one of the truing tool carriers;

Fig. 6 is a vertical sectional view, on an enlarged scale, taken approximately on the line 6—6 of Fig. 4, through one of the roller supports for a truing tool carrier;

Fig. 7 is a rear elevation, on an enlarged scale, of one of the truing tool units having parts broken away and shown in section to show the feed compensating mechanism for the truing tool; and

Fig. 8 is a combined electric and hydraulic diagram of the actuating mechanisms and the controls therefor.

An improved multiple wheel grinding machine has been illustrated in the drawings comprising a base 10 having a longitudinally movable work table 11 slidably supported on a flatway 12 and a V-way 13 formed on the upper surface of the base 10. The table 11 serves as a support for a motor driven headstock 14 and a footstock 15 for rotatably supporting a work piece to be ground. The headstock 14 may be driven by an electric motor 16 mounted on the upper surface thereof.

A manually operable traverse mechanism may be provided which may be of the old and well known type such as, for example, that shown in the expired U. S. patent to C. H. Norton No. 762,838 dated June 14, 1904, to which reference may be had for disclosures not contained herein. A manually operable traverse wheel 18 is mounted on the front of the machine base for actuating the traversing mechanism (not shown) to position the table 11 longitudinally relative to the base 10.

The base 10 also serves as a support for a transversely movable wheel slide 20 supported on a flat way 21 and a V-way 22. The wheel slide 20 rotatably supports a wheel spindle 23 in suitable journalled bearings (not shown). The wheel spindle 21 is arranged to support a plurality of spaced grinding wheels 24, 25, 26 and 27. A driving mechanism is provided for the wheel spindle 23 comprising an electric motor 28 mounted on the upper surface of a wheel guard 33. The motor 28 is provided with a motor shaft 29 supporting a multiple V-groove pulley 30 which is connected by multiple V-belts 31 with a multiple V-groove pulley 32 mounted on the right hand end of the wheel spindle 23 (Fig. 1).

A suitable feeding mechanism is provided for feeding the wheel slide 20 transversely relative to the base. This mechanism may comprise a rotatable feed screw 35 which meshes with or engages a feed nut 36. The feed nut 36 is rotatably journalled in a pair of spaced anti-friction bearings 37 and 38 which are supported by a housing 39 depending from the under side of the wheel slide 20. The right hand end of the feed screws 35 (Fig. 2) is rotatably supported by a slidably mounted sleeve 40 which is journalled in a cylindrical aperture 41 formed in the base 10. The left hand end of the feed screw 35 is provided with an integral reduced cylindrical portion 42 which is slidably keyed in a rotatable sleeve 43. The sleeve 43 is journalled in an anti-friction bearing 44 supported by the base 10.

A manually operable feeding mechanism is provided for actuating the feed screw 35 to cause a transverse feeding movement of the wheel slide 20. This mechanism may comprise a rotatable feed wheel 45 located on the front of the machine base 10. The feed wheel 45 is arranged to rotate a gear 46 meshing with a gear 47 which is mounted on a rotatable shaft 48. The shaft 48 also supports a gear 49 meshing with a gear 50 rotatably mounted on a shaft 51. The gear 50 meshes with a gear 52 mounted on the left hand end of a rotatable shaft 53, the right hand end of which is slidably keyed within the sleeve 43. It will be readily apparent from the foregoing disclosure that a rotary motion of the feed wheel 45 will be transmitted through the gear mechanism above described to impart a rotary motion to the feed screw 35 thereby transmitting a transverse feeding movement to the wheel slide 20 and the grinding wheels 24, 25, 26 and 27. The direction of rotation of the feed wheel 45 serves to determine the direction of transverse movement of the wheel slide 20.

In order to cause a rapid transverse positioning movement of the wheel slide 20 relative to the base 10, a hydraulically operated mechanism is provided comprising a fluid pressure cylinder 55 which contains a slidably

mounted piston **56**. The piston **56** is connected to the right hand end of a piston rod **57**, the left hand end of which is operatively connected to the sleeve **40**. When fluid under pressure is passed into a cylinder chamber **58**, the piston **56** together with the feed screw **35** will be moved rapidly toward the left to impart a corresponding movement to the wheel slide **20** and the grinding wheel **21**. During this movement, fluid is exhausted from the cylinder chamber **59**. A feed control valve **60** (Fig. 8) is provided for controlling the admission to and exhaust of fluid under pressure from the cylinder **55**.

A grinding wheel feeding mechanism may be provided for imparting a slow rotary motion to the feed screw **35** in a manner substantially identical with that shown in my copending application Ser. No. 259,372 filed December 1, 1951, U. S. Patent No. 2,648,171 dated August 11, 1953, to which reference may be had for details of disclosure not contained herein. This mechanism may comprise a cylinder **285** (Fig. 8) which contains a slidably mounted piston **286**. The piston **286** is provided with rack teeth **287** which mesh with a gear **288** mounted on a shaft **289**. The shaft **289** also supports a gear **290** which meshes with the gear **47** (Fig. 2). When fluid under pressure is passed through a pipe **291** into the left hand end of the cylinder **285**, the piston **286** will move toward the right to impart a rotary motion to the feed screw **35** so as to cause a forward feeding movement of the wheel slide **20**. During this movement of the piston **286** fluid may exhaust from the chamber at the right hand end of the cylinder **285** through a pipe **292**. The feed control valve **60** serves to simultaneously control the passage of fluid under pressure to both the cylinder **55** and the cylinder **285**. A manually operable rotary-type valve **293** is provided for rendering the grinding wheel feed cylinder **285** inoperative when desired. The valve **293** is actuated by a lever **294**. When the lever **294** is shifted in a counter-clockwise direction into broken line position **294***a*, the valve rotor is turned so that fluid under pressure from the pressure pipe **68** passes through the valve **293** and through a pipe **295** to actuate a fluid pressure actuated by-pass valve **296**. When pressure is passed through the pipe **295** to shift the valve **296** to a left hand end position fluid under pressure is cut-off from the cylinder **285** and fluid may then by-pass between opposite ends of the cylinder **285** to facilitate a manual feeding of the grinding wheel slide **20** by rotation of the feed wheel **45**.

The control valve **60** is normally held in a right hand end position by a spring **61**. A solenoid S7 (Fig. 8) is provided which when energized serves to pass fluid under pressure to start a rapid movement of the piston **56** toward the left to cause a rapid approaching movement of the grinding wheel slide **20**, and at the same time to pass fluid to the left hand end of the cylinder **285** to cause a slow movement of the piston **286** to impart a slow rotary motion to the feed screw so as to advance the wheel slide **20** at a grinding speed.

The solenoid S7 is preferably controlled from the control station at the front of the machine by means of an electrical control apparatus comprising a pivotally mounted lever **295** pivoted on a stud **296**. When the lever **295** is rocked in a clockwise direction (Fig. 8) it closes a start switch **297** to energize an electric timer **298**. The timer **298** may be any of the well known commercial timers, such as, for example a Microflex timer manufactured by the Signal Electric Corp. of Moline, Illinois. When the timer **298** is energized a circuit is made to energize the solenoid S7 thereby starting a rapid approaching movement of the grinding wheel and a slow feeding movement thereof in a manner above described. After a predetermined time interval has elapsed, the electric timer times out thereby breaking a circuit to deenergize the solenoid S7 so that the wheel slide is moved rapidly to a rearward or inoperative position and at the same time the feed screw **35** is rotated in the reverse direction so as to reset for the next grinding operation. A stop switch **299** is provided to facilitate stopping the grinding cycle at any time during a grinding operation if desired. If it is desired to stop a grinding cycle, the lever **295** may be rocked in a counter-clockwise direction to actuate the stop switch **299** thereby breaking a circuit to deenergize the solenoid S7 and also to allow the timer **298** to reset.

A hydraulic system is provided comprising a motor driven fluid pump **65** for supplying fluid under pressure to the various actuating mechanisms of the machine. The pump **65** draws fluid through a pipe **66** from a reservoir **67** and forces fluid under pressure through a pipe **68** to the various mechanisms of the machine to be hereinafter described. A relief valve **69** is connected in the pipe line **68** for returning excess fluid under pressure to the reservoir **67** to facilitate maintaining a predetermined pressure in the hydraulic system. A start switch **70** is provided for controlling the starting and stopping of the pump driving motor. When the start switch **70** is closed, a relay switch **71** is energized to start the pump driving motor. The relay switch **71** sets up a holding circuit to maintain the motor in a running condition after the push button switch **70** is released. A stop switch **72** is provided for breaking the circuit so as to stop the pump **65** when desired.

A multiple wheel truing apparatus is provided whereby all of the grinding wheels may be simultaneously trued by means of a manually initiated cycle. This mechanism may comprise a cross slide **80** which is supported on a flat way **81** and a V-way **82** formed on an upper surface of the wheel slide **20**. The cross slide **80** is provided with a longitudinally extending dovetailed slideway **83** for guiding a longitudinally traversable slide **84**. The slide **84** is provided with a dovetailed slideway **85** to which a plurality of truing tool units **86**, **87**, **88** and **89** may be clamped in spaced adjusted positions thereon. Each of the truing tool units **86**, **87**, **88** and **89** are provided with a clamping block **78** to facilitate clamping the units in adjusted position of the dovetail slideway **85** (Fig. 4).

A suitable feeding mechanism is provided for adjusting the cross slide **80** toward and from the wheel spindle **23**. This mechanism may comprise a feed screw **90** which meshes with or engages a rotatable feed nut **91** journalled in anti-friction bearings **92** and **93**. A shaft **104** is slidably keyed within the feed screw **90**. The left hand end of the shaft **104** is rotatably supported in an anti-friction bearing **94** at its left hand end which serves to hold the shaft **104** against an axial movement. The right hand end of the feed screw **90** is journalled in anti-friction bearings **95** supported within a piston **96**. The nut **91** is provided with a spiral gear **97** which meshes with a spiral gear **98** which is keyed onto a rotatable shaft **99**. The other end of the shaft **99** is provided with a manually operable hand wheel **100**. By rotation of the hand wheel **100**, a rotary motion may be imparted through the mechanism just described to rotate the feed nut **91** thereby causing a transverse movement of the cross slide **80**.

In order to cause a rapid positioning movement of the cross slide **80** a hydraulically operated mechanism is provided comprising the piston **96** which is slidably mounted within a cylinder **102**. The cylinder **102** is fixedly mounted relative to the wheel slide **20**. The right hand end of the feed screw **90** is formed as a piston rod **103**. The feed screw **90** may be moved in an axial direction by the piston **96** or may be rotated in a manner to be hereinafter described for imparting motion to the cross slide **80**. When fluid under pressure is passed through a pipe **105** into a cylinder chamber **101**, the piston **96** will be moved toward the left (Figs. 2 and 8) to impart a corresponding positioning movement to the cross slide **80** so as to move the truing tool units **86**, **87**, **88** and **89** into an operative position. In the preferred form a separate independent hydraulic mecha-

nism is provided for moving the cross slide **80** rearwardly to an inoperative position. This mechanism may comprise a cylinder **106** which is fixedly mounted on the cross slide **80**. The cylinder **106** contains a slidably mounted piston **107** which is connected to one end of a piston rod **108**. The right hand end of the piston rod **108** is fixedly mounted to a bracket **109** which in turn is fixedly mounted relative to the wheel slide **20**. When fluid under pressure is passed through a pipe **110** into a cylinder chamber **111**, the piston **107**, being anchored, the cylinder **106** moves toward the right (Figs. 2 and 8) to cause a rapid rearward movement of the cross slide **80**. A manually operable rotary-type valve **112** is provided for controlling the admission to and exhaust of fluid from the cylinders **102** and **106**. The valve **112** is provided with a manually operable lever **113** by means of which a valve rotor **114** may be shifted to reverse the flow of fluid when desired. As illustrated in Fig. 8 fluid under pressure from the pipe **68** passes through the valve **112** and through the pipe **110** into the cylinder chamber **111** to move the cross slide **80** into a rearward or inoperative position and to hold it in this position. When it is desired to effect a truing operation, the lever **113** may be rocked in a counter-clockwise direction into the broken line position **113***a* (Fig. 8) so that fluid under pressure from the pipe **68** will pass through the pipe **105** to cause a forward movement of the cross slide **80**.

A power operated traversing mechanism is provided for traversing the truing tool slide **84** longitudinally in either direction. This mechanism may comprise a feed screw **120** which is rotatably journalled in a bearing **121** fixedly mounted on the cross slide **80**. This feed screw **120** meshes with or engages a nut **122** mounted on the left hand end of the slide **84** (Fig. 8). A rotary-type fluid motor **123** is provided for actuating the feed screw **120**. The fluid motor **123** is mounted on the cross slide **80**. The motor **123** is provided with a rotor shaft **124** having a V-groove pulley **125** which is connected by a V-belt **126** with a V-groove pulley **127** mounted on the left hand end of the feed screw **120**. It will be readily apparent from the foregoing disclosure that rotation of the motor shaft **124** will be imparted through the driving mechanism above described to rotate the feed screw **120** and thereby impart a longitudinal traversing movement to the slide **84**. As shown diagrammatically in Fig. 8, the fluid motor **123** is connected directly to the feed screw **120**.

A solenoid actuated control valve **130** is provided for controlling the admission to and exhaust of fluid from the fluid motor **123**. The valve **130** is a piston-type valve having a slidably mounted valve member **132** which is normally held in a central position by a pair of opposed balanced springs **133** and **134**. A pilot valve **135** is provided for controlling the shifting movement of the valve member **132** in either direction. A pair of solenoids S1 and S2 are provided for controlling the shifting movement of the pilot valve **135** in either direction. When the solenoid S2 is energized, the pilot valve **135** is shifted toward the left (Fig. 8) so that fluid under pressure in the pressure pipe **68** may pass through a pipe **136**, through the pilot valve **135**, through a passage to the right hand end chamber of the valve **130** to move the valve member **132** toward the left so that fluid under pressure from the pressure pipe **68** may pass through a pipe **137**, through the valve **130**, through a pipe **138**, through a throttle valve **139** to the fluid motor **123** so as to rotate the feed screw **120** to traverse the slide **84** toward the left. During this actuation of the motor **123**, fluid may exhaust from the motor through a pipe **140**, through a throttle valve **141**, through a pipe **142**, through a central passage **143** in the valve member **132** and out through an exhaust pipe **144** into the reservoir **67**. A ball check valve **145** is provided so that when fluid under pressure is reversed and passed through the pipe **142**, fluid may bypass the throttle valve **141** by passing through the ball check valve **145**.

When the solenoid S1 is energized, the pilot valve **135** is shifted toward the right (Fig. 8) to pass fluid under pressure into the left hand end chamber of the valve **130** so as to shift the valve member **132** toward the right so that fluid under pressure from the pipe **137** passes through the valve **130**, through the pipe **142**, the throttle valve **141**, the ball check valve **145** and through the pipe **140** to the motor **123** to rotate the shaft thereof and the feed screw **120** in the opposite direction so as to traverse the slide **84** longitudinally toward the right. The throttle valves **139** and **141** are provided to facilitate independently adjusting the speed of the motor **123** in either direction.

It is desirable to automatically control the energization of the solenoids S1 and S2 so that the slide **84** may be reciprocated through one or more strokes automatically. As illustrated in Fig. 8, a pair of spaced lugs **150** and **151** are provided on the rear surface of the slide **84**. These lugs **150** and **151** are arranged to actuate a pair of limit switches LS2 and LS3 respectively which are operatively connected so as to energize either the solenoid S1 or the solenoid S2.

In order to start a truing cycle, a manually operable push button switch **155** is provided which when closed serves through the normally closed contact of the limit switch LS2 to energize a relay switch **156**. The push button switch **155** is a momentary contact switch and the relay switch **156** is provided with a holding circuit to hold the circuit closed after the push button switch **155** is released. The energizing of the relay switch **156** serves to close a circuit to energize the solenoid S1 thereby shifting the valve member **132** toward the right so as to pass fluid under pressure through the pipe **132** and the throttle valve **141** to the motor **123** to rotate the feed screw **120** so as to cause the slide **84** to traverse toward the right. The traversing movement of the slide **84** toward the right continues until the lug **151** engages the actuating plunger of the limit switch LS2 thereby breaking the holding circuit to the relay switch **156** thus deenergizing the solenoid S1. The normally open contacts of the limit switch LS2 then close. When the lug **150** moves away from the limit switch LS3, the normally closed contacts of the limit switch LS3, that is, the right hand contacts of limit switch LS3 (Fig. 8) close to energize a relay switch **157** which in turn closes a circuit to energize a relay switch **158**. The relay switch **158** is provided with a holding circuit so that when the relay switch **157** becomes deenergized the relay switch **158** will be maintained energized. The energization of the relay switch **158** closes a circuit to energize the solenoid S2 thereby shifting the pilot valve **135** toward the left so that fluid under pressure is passed to the right hand end chamber of the valve **130** to shift the valve member **132** toward the left so that fluid under pressure is passed through the pipe **138**, through the throttle valve **139** to the motor **123** to rotate the feed screw **120** in the opposite direction thereby traversing the slide **84** longitudinally in the opposite direction, namely toward the left. As soon as the lug **150** on the slide **84** engages and actuates the limit switch LS3, the right hand contacts thereof are opened thus breaking a circuit to denergize the relay switch **157** which in turn deenergizes the relay switch **158** and the slide **84** is stopped after one complete reciprocation. If a continuous truing operation is desired, that is, more than one complete reciprocation of the slide **84**, a continuous truing switch **159** is closed. In case the switch **159** is closed, when the lug **150** actuates the limit switch LS3 to close the left hand contacts thereon, a circuit is set up to again energize the relay switch **156** to start a second reciprocation of the longitudinally movable slide **84**. The slide **84** will be continuously reciprocated as long as the switch **159** remains closed. A stop switch **160** is connected in series with the start

switch 155 so that the movement of the truing tool slide 84 may be stopped at any time desired.

In order to facilitate truing the grinding wheel a predeterminal amount at each pass of the longitudinally movable slide 84, it is desirable to provide an automatic compensator 165 which is arranged automatically to rotate the feed screw 90 by a predetermined increment to advance the cross slide 80 and at the same time to rotate the wheel feed nut 36 relative to the feed screw 35 to compensate for the reduction in size of the grinding wheels caused by the truing operation, so that after a truing operation grinding may be resumed without the necessity of resetting the wheel feeding mechanism.

The feed compensator 165 may comprise a fluid motor including a cylinder 166 containing a slidably mounted piston 167 which is fixedly connected to one end of a piston rod 168. A piston-type control valve 169 is provided for controlling the reciprocatory movement of the piston 167. This motor is identical with that disclosed in the prior U. S. Patent No. 2,522,481 to D. W. Martin dated September 12, 1950, and the compensator as a unit is substantially the same as that shown in the prior U. S. Patent No. 2,522,485 to H. A. Silven and C. G. Flygare dated Sptember 12, 1950, to which reference may be had for details of disclosure not contained herein. A pipe 170 connects the pipe 142 with the compensator 165 and a pipe 171 connects the pipe 138 with the compensator 165 so that when fluid under pressure is passed through either the pipe 142 or the pipe 138 to cause a longitudinal traversing movement of the truing tool slide 84, fluid is also passed to the feed compensator 165 to advance the cross slide 80 at the start of each longitudinal movement of the slide 84 and also to advance the wheel slide 20 by an equal amount. The control valve 169 is shifted by the admission of fluid under pressure to either the end chamber 172 or the end chamber 173. The shifting movement of the valve 169 is controlled by throttle valves 174 and 175. Ball check valves 176 and 177 allow fluid to bypass the throttle valves 174 or 175 on the pressure side of the system. The motor being identical with the disclosure in the prior patents above referred to, reference may be had thereto for disclosures not contained herein. During each longitudinal movement of the control valve 169, the piston 167 makes one complete reciprocation.

The piston rod 168 is provided with an arm 178, the upper end of which is provided with a yoke 179 which slides within a groove formed in a collar 180 mounted on the left hand end of a slide rod 181. The slide rod 181 is provided with a rack bar 182 which meshes with a gear segment 183. The gear segment 183 is rotatably supported on a shaft 184. The gear segment 183 is provided with a projecting lug 185 which carries a pivotally mounted spring pressed pawl 186. The pawl 186 is arranged to engage a ratchet wheel 187 keyed on the end of the shaft 184. A spring pressed holding pawl 188 is mounted on a fixed stud 189 to prevent clockwise movement of the ratchet wheel 187. It will be readily apparent from the foregoing disclosure that during each reciprocation of the piston 167, the slide rod 181 will be reciprocated through a similar stroke to oscillate the gear segment 183. During the clockwise movement of the gear segment 183, the feed pawl 186 rides idly over the teeth of the ratchet wheel 187. During the return counter-clockwise movement of the gear segment 183, the feed pawl 186 imparts a rotary motion to the ratchet wheel 187.

The shaft 184 is operatively connected simultaneously to impart a compensating adjustment to the wheel feeding mechanism and also to the truing tool feeding mechanism. The shaft 184 is provided with a bevel gear 190 which meshes with a bevel gear 191 (Fig. 2) mounted on a vertically arranged rotatable shaft 192. A worm 193 is mounted on the lower end of the shaft 192 and meshes with a worm gear 194 formed on the periphery of the feed nut 36. A worm 195 is mounted on the upper end of the shaft 192 and meshes with a worm gear 196 mounted on the left hand end of the shaft 104. It will be readily apparent from the foregoing disclosure that a compensating rotation of the shaft 184 by the feed compensator 165 will be imparted to provide a compensating adjustment of the wheel slide 20 and also a rotation of the feed screw 90 to advance the truing tool for a truing operation. By advancing the wheel slide by an amount equal to the infeed of the truing tool, grinding may be resumed after a truing operation without the necessity of resetting the wheel feeding mechanism. This latter is due to the fact that the compensating adjustment is made by rotation of the feed nut 36 relative to the stationary feed screw 35.

As above explained the truing tool units 86, 87, 88 and 89 are each formed with dovetailed slide surfaces which mate with the dovetailed surface 85 formed on the longitudinally multiple slide 84. This arrangement facilitates setting up the machine and providing means for positioning the units along the slide 84 to correspond with the spacing of the grinding wheels 24, 25, 26 and 27 respectively. Each of the truing tool units 86, 87, 88 and 89 are provided with a diamond or truing tool 200, 201, 202 and 203 respectively which are mounted in a manner to be hereinafter described. The truing tool units are arranged on the slide 84 so that they may be traversed or reciprocated in a direction parallel to the axis of the grinding wheel spindle 23 simultaneously to true the peripheral surfaces of all of the grinding wheels.

Each of the truing tool units 86, 87, 88 and 89 are identical in construction, consequently only the truing tool unit 86 will be described in detail. The truing tool unit 86 is provided with a truing tool slide 205 which is mounted on a roller support to provide a free movement thereof during truing operation. As illustrated in Figs. 3 and 4, a pair of rollers 206 and 207 are mounted on studs 208 and 209 respectively. These rollers engage upper and lower surfaces formed on the slide 205. A second pair of rollers 210 and 211 are mounted on studs 212 and 213 and are arranged to engage upper and lower surfaces on the slide 205 adjacent to the rear end thereof. These studs are all supported on a frame 214 of the unit 86.

As illustrated in Figs. 5 and 6 the slide 205 is formed in two parts the upper part of which is substantially a T-shaped bar 215 having an upwardly extending rib 216, the upper surface of which is engaged by the rollers 206 and 210. The rollers 206, 207, 210 and 211 serve to form a sliding support to guide the slide 205 in a vertical plane.

Additional roller supports are provided for laterally guiding the slide 205 comprising a pair of rollers 217 and 218 mounted on a pair of studs 219 and 220, the studs 219 and 220 being mounted on the frame 214. The rollers 217 and 218 are arranged to engage opposite side faces of the rib 216. The right hand end of the slide 205 (Figs. 3 and 4) is guided by a pair of spaced rollers 227 and 228 which engage opposite sides of the rib 216. The rollers 227 and 228 are supported by a pair of studs 229 and 230 respectively. A slide bar 226 slidably engages a V-way 234 formed on the under side of the slide 205. The left hand end of the slide bar 226 is provided with a slabbed-off portion forming a downwardly extending rib 225. The opposite side faces of the rib 225 are engaged by a pair of rollers 221 and 222 mounted on a pair of studs 223 and 224 which are carried by the frame 214. The forward end of the slide 205 is provided with a vertically arranged head 231 (Fig. 4) which supports a truing tool holder 232. A sheet metal casing 233 surrounds most of the truing tool unit 86 and is fastened to the head 231 so that it moves with the slide 205. The slide bar 226 is engaged by the rollers 207 and 211. The slide 205 (Fig. 4) comprises the spaced parallel bars 215 and 226 which are spaced from each other by

blocks 205*a* and 205*b*. The bar 215 is fixedly mounted to the upper surfaces of the blocks 205*a* and 205*b*. The bar 226 is adjustably mounted relative to the blocks 205*a* and 205*b* as will be hereinafter described.

The slide bar 226 serves as a support for the follower 235 which rides along the face of a forming bar 236. The forming bar 236 extends across the upper surface of the longitudinally movable slide 84 and is fastened at its opposite ends with adjustable clamping screws 237 and 238 to the cross slide 80. These screws 237 and 238 pass through elongated slots 239 and 240 respectively and are screw threaded into the cross slide 80. The elongated slots 239 and 240 are provided to facilitate adjustment of the forming bar longitudinally in setting up the machine.

A tension spring 241 is provided for maintaining the follower 235 in operative engagement with the forming bar 236. One end of the spring 241 is fastened to a stud 242 fixedly mounted on the frame 214 (Fig. 4). The other end of the spring 241 is fastened to a stud 243 which is carried by an upwardly extending lug 244 fixedly mounted on the slide 205. The tension of the spring 241 serves to maintain the follower 235 in operative engagement with the forming bar 236 during a longitudinal traversing movement of the slide 84. By using a follower 235 and a forming bar 236, a transverse movement of the truing tool slide 205 may be obtained during the longitudinal traversing movement to produce the desired shape on the operative face of the grinding wheel 24. All of the other truing units 87, 88 and 89 are identical in construction. Each of these latter truing tool units are provided with followers 235*a*, 235*b* and 235*c* respectively as illustrated in Fig. 1.

In a multiple wheel grinding operation where a plurality of spaced grinding wheels are employed simultaneously to grind spaced portions on a work piece, it is desirable to provide independent adjustments for each of the truing tools to compensate for variations in wheel wear and truing tool wear. This is preferably accomplished by providing a nut and screw adjustment between the truing slide 205 and the follower 235. As illustrated in Fig. 4, a bracket 250 is mounted on the right hand end of the slide 205. The bracket 250 serves as a support for a rotatable feed screw 251 which meshes with or engages a threaded aperture 252 formed at the bar 226. A hydraulically operated mechanism is provided for actuating the feed screw 251 which is arranged so that it may be remotely controlled from a control station on the front of the machine base. This mechanism may comprise a cylinder 253 fixedly mounted on the bracket 250. The cylinder 253 contains a slidably mounted piston 254 which is normally urged into a left hand end position by means of a compression spring 255 (Figs. 3 and 8). The right hand movement of the piston 254 is limited by a stud 256 fixedly mounted on the piston 254 moving into engagement with an adjustable stop screw 257 carried by a cylinder end cap 258. The piston 254 is provided with a pivotally mounted pawl 259 (Fig. 3) which is arranged to engage a ratchet wheel 260 to turn the same in a clockwise direction when the piston 254 is moved toward the right (Fig. 3). The ratchet wheel 260 is mounted on the upper end of a vertical shaft 261. A worm 262 mounted on the lower end of the shaft 261 (Fig. 7) meshes with a worm gear 263 which is rotatably supported on the feed screw shaft 251. A manually operable knob 264 is slidably keyed onto the right hand end of the feed screw shaft 251 (Fig. 4). The knob 264 is provided with clutch teeth which are arranged to engage clutch teeth formed on the right hand side face of the worm gear 263 (Fig. 4). It will be readily apparent that when desired the knob 264 may be moved toward the right to disengage the clutch teeth after which the feed screw 251 may be manually rotated to facilitate a manual adjustment of the truing tool 200 when desired in setting up the machine. An index finger 265 is fixedly mounted on the bracket 250 and serves to cooperate with a graduated scale on the periphery of the knob 264 to facilitate a manual adjustment thereof. A manually operable knob 266 is provided on the upper end of the shaft 261 to facilitate a fine manual adjustment of the feed screw 251 when the knob 264 is engaged with the worm gear 263. As shown in Fig. 7 an index finger 267 cooperates with a graduated scale on the periphery of the knob 266 to provide a calibrated adjustment of the truing tool 200 by manual rotation of the knob 266.

All of the other truing tool units 87, 88 and 89 are provided with an identical manual and hydraulically actuated adjusting mechanism as indicated in Fig. 1 by numerals 253*a*, 253*b* and 253*c* respectively.

In order to facilitate a remote control of the adjusting mechanism just described, a control valve 270 (Fig. 8) is provided for controlling the admission to and exhaust of fluid from the cylinder 253. The valve 270 is a piston-type valve comprising a slidably mounted valve member 271 which is normally held in a central position by a pair of opposed compression springs 272 and 273. The valve member 271 is arranged so that it may be moved in either direction by a pair of solenoids S3 and S4. When it is desired to give the diamond or truing tool 200 a compensating adjustment, a push button switch 274 is closed to energize the solenoid S3 so as to shift the valve member 271 toward the left so that fluid under pressure from the pressure pipe 68 entering a valve chamber 275 may pass through a pipe 276 into a chamber formed at the left hand end of the cylinder 253 to move the piston 254 toward the right until the stud 256 moves into engagement with the stop screw 257. This movement of the piston serves in a manner above described to impart a rotary motion to the feed screw 251 so as to adjust the position of the follower 235 relative to the diamond or truing tool 200 by a predetermined increment.

Similarly, if it is desired to provide a compensating adjustment to the diamond or truing tool 201, a push button 274*a* is closed to energize the solenoid S4 thereby shifting the valve member 271 toward the right (Fig. 8) so that fluid under pressure entering the valve chamber 275 may pass through a pipe 276*a* into a chamber formed at the left hand end of the cylinder 253*a* thereby imparting a compensating adjustment to the truing tool 201.

A similar control valve 270*a* is provided for controlling the admission of fluid under pressure to the cylinders 253*b* and 253*c* so as to provide compensating adjustments for the truing tools 202 and 203 respectively. The control valve 270*a* is a piston-type valve having a slidably mounted valve member 271*a* which is normally held at a central position by a balanced compression spring 272*a* and 273*a*. The valve member 271*a* may be shifted in either direction by a pair of solenoids S5 and S6. When it is desired to impart a compensating adjustment to the truing tool 202, a push button switch 274*b* is closed to energize the solenoid S5 thereby shifting the valve member 271*a* toward the left so that fluid under pressure entering a valve chamber 275*a* may pass through a pipe 276*b* into a cylinder chamber at the left hand end of the cylinder 253*b* to move the piston 254*b* toward the right thereby imparting a compensating adjustment to the truing tool 202 in a manner similar to that described above.

When it is desired to impart a compensating adjustment to the truing tool 203, a push button switch 274*c* is closed to energize the solenoid S6 so as to shift the valve member 271*a* toward the right so that fluid under pressure entering the valve chamber 275*a* may pass through a pipe 276*c* into a cylinder chamber formed at the left hand end of the cylinder 253*c* to move the piston 254*c* toward the right into engagement with a stop screw 257*c* thereby imparting a compensating ad-

justment to the truing tool **203** in a manner substantially the same as that previously described.

It will be readily apparent from the foregoing disclosure that by adjustment of the stop screws **257**, **257***a*, **257***b* and **257***c* the increment of compensating adjustment for each of the truing tools **200**, **201**, **202** and **203** may be independently regulated.

In grinding a work piece having a plurality of spaced portions to be ground, the mechanisms above described are set up so that the truing tools when traversed simultaneously across the peripheries of the wheels **24**, **25**, **26** and **27** will true the wheels to the desired shape and diameter so that a transverse movement of the wheel slide **20** will simultaneously grind a spaced portion on a work piece rotatably supported between the headstock **14** and footstock **15** to the desired and predetermined sizes. If due to wheel wear or truing tool wear, it is necessary to provide a compensating adjustment for one or more of the truing tool units **86**, **87**, **88** or **89**, this may be accomplished as above explained by manual manipulation of the push button switches **274**, **274***a*, **274***b* and **274***c*.

As illustrated in Fig. 8, a control mechanism is provided for the wheel driving motor **28** comprising a push button start switch **280**. The push button start switch **280** is connected to actuate a relay switch **281**. The relay switch **281** is provided with a holding circuit to hold the circuit closed after the push button **280** is released. A stop switch **282** is provided to facilitate breaking the holding circuit and thereby stop the wheel driving motor **28** when desired.

In order that the operator may visibly indicate the progress of the grinding operation, a plurality of gaging devices are provided for visibly indicating the size of each portion of the work piece being ground. As illustrated in Fig. 2, a caliper-type gage **300** is provided having a dial indicator **301** which indicates work size. As indicated in Fig. 1 a plurality of dial gages **301**, **301***a*, **301***b* and **301***c* are provided. These gages are arranged to engage spaced portions of the work piece during grinding. These gages are manually applied to the work at the start of the grinding operation. They are old and well known expedients in the grinding art and consequently have not been illustrated in detail.

The operation of the improved grinding machine truing apparatus will be readily apparent from the foregoing disclosure. When it is desired to simultaneously true all of the grinding wheels, it is preferably accomplished when the wheel slide **20** is in a rearward or inoperative position. In this position of the slide, with the grinding wheels rotating the control lever **113** is rocked in a counter-clockwise direction into dotted line position **113***a* (Fig. 8) so that fluid under pressure is passed through the pipe **105** into the cylinder chamber **106** to move the piston **96** toward the left (Fig. 8) thereby moving the cross slide **80** forward into an operative position. The push button switch **155** is then closed to start a truing cycle. The left hand contacts of limit switch LS2 being closed, the relay switch **156** is energized to close the contactors thereof thereby energizing the solenoid S1 to shift the valve member **132** toward the right so that fluid under pressure passing through the valve **130** passes through the pipe **138** to the motor **123** to rotate the feed screw **120** to start a traversing movement of the longitudinally movable slide **84** to traverse all of the truing tools **200**, **201**, **202** and **203** toward the right. At the same time the motor **123** is started, fluid under pressure is passed through the pipe **171** to actuate the feed compensator **165** which serves in a manner above described to impart a rotary motion to the screw **90** to advance the cross slide **80** by a predetermined amount for the truing operation. At the same time the compensator **165** imparts a rotary motion to the feed nut **36** to advance the wheel slide **20** through an equal distance so that after the truing operation, grinding may be resumed without resetting the wheel feeding mechanism.

The longitudinally movable slide **84** continues its movement toward the right at a speed governed by the throttle valves **139** and **141** simultaneously to traverse the truing tools across the faces of the grinding wheels **24**, **25**, **26** and **27**. This movement continues until the stop lug **151** on the slide **84** engages and actuates the limit switch LS2. Opening the left hand contacts of the LS2 serves to deenergize the relay switch **156** thereby deenergizing the solenoid S1.

When the slide **84** starts its movement to the right the lug **150** moves away from the limit switch LS3 thereby opening the left hand contacts thereof and closing the right hand contacts thereof. Opening the left hand contacts of the limit switch LS3 opens a circuit to the relay switch **156** but due to the fact that the left hand contacts of the limit switch LS2 are closed the relay switch **156** remains energized. As the lug **150** moves away from the limit switch LS3, the right hand contacts thereof are closed to energize the relay switch **157** which in turn energizes the relay switch **158** and sets up a holding circuit so that the relay switches **157** and **158** remain energized after the right hand contacts of the limit switch LS2 are opened. As the slide **84** reaches the right hand end of its stroke the lug **151** shifts the limit switch LS2 to close the right hand contacts thereof which serves through the right hand contacts of the relay switch **158** to energize the solenoid S2 thereby shifting the valve member **132** toward the left so that fluid under pressure passes through the control valve **130** and through the pipe **142** to the motor **123** thereby imparting a rotary motion to the feed screw **120** in the reverse direction to start a traversing movement of the slide **84** toward the left. At the same time fluid is passed through the pipe **142**, it is also passed through the pipe **170** to actuate the feed compensator **165** which in turn serves to impart a feeding movement to the cross slide **80** and an equal compensating feed to the wheel slide **20**. The slide **84** continues its movement toward the left to pass the truing tools **200**, **201**, **202** and **203** across the peripheries of the grinding wheels **24**, **25**, **26** and **27** respectively to make a second truing thereof. The speed of movement of the truing tools during the truing operation on each of the passes may be varied as desired by regulating the throttle valve **139** and **141**. The first pass may be at a slightly more rapid rate while the final pass may be made at a slower rate to produce the final truing of the wheels.

If it is desired to make more than two passes, that is, one complete reciprocation of the truing tools, this may be accomplished by again closing the start switch **155**. Each time the switch **155** is closed, a single reciprocation of the slide **84** is provided. If it is desired to provide a continuous truing, that is, continuously reciprocate the truing tools for an indefinite number of passes, the continuous truing switch **159** may be closed which serves to close a circuit so that when the push button switch **155** is closed the slide **84** will be reciprocated continuously and the diamonds or truing tools reciprocated across the peripheries of the grinding wheels in a manner above described until the circuit is broken by opening the stop switch **160**.

If during a grinding operation the operator observes by the dial gages that one of the wheels is grinding undersize, this means that either some of the wheels have worn away at a faster rate than the others or that one or more of the diamonds has worn away. In this case it may be desirable to compensate and to true one or more of the grinding wheels without returning the wheel slide **20** to a rearward position. This may be accomplished by shifting the lever **294** in a counter-clockwise direction into the broken line position **294***a* to shift the valve **293** so that the valve **296** is shifted to a by-pass position thereby stopping the infeeding movement of the wheel slide **20**. When the wheel slide has stopped the grinding

operation, one or more of the push button switches **274**, **274***a*, **274***b* or **274***c* may be closed in a manner above described to incrementally advance one of the truing tools **200**, **201**, **202** or **203** after which the push button switch **155** may be closed to cause the truing tools to reciprocate across the peripheries of the wheels so that the oversized wheel or wheels may be trued to the proper size after which grinding may be resumed by again shifting the lever **294** into the full line position as indicated in Fig. 8. If more than one increment is required to reduce the oversized wheel by the desired amount, a second incremental feeding may be accomplished by again pressing one of the push button switches **274**, **274***a*, **274***b* or **274***c*.

It will thus be seen that there has been provided by this invention apparatus in which the various objects hereinabove set forth together with many thoroughly practical advantages are successfully achieved. As many possible embodiments may be made of the above invention and as many changes might be made in the embodiment above set forth, it is to be understood that all matter hereinbefore set forth, or shown in the accompanying drawings, is to be interpreted as illustrative and not in a limiting sense.

I claim:

1. In a grinding machine having a base, a transversely movable wheel slide thereon, a rotatable grinding wheel thereon, means to feed said slide transversely in a direction transverse to the wheel axis to facilitate grinding a work piece to a predetermined size, and a truing apparatus on said slide including a cross slide movable in a direction normal to the axis of the grinding wheel, means to move said cross slide in either direction, a longitudinally movable carriage on said cross slide movable in a direction parallel to the axis of the grinding wheel, means to traverse said carriage longitudinally in either direction parallel to the axis of the grinding wheel, an adjustable truing tool unit which is adjustable longitudinally relative to said carriage including a slidably mounted truing tool carrier on said unit arranged to move in a direction normal to the axis of the grinding wheel, a forming bar on said cross slide, a follower on said carrier, means to maintain said follower in engagement with said bar during longitudinal movement of the carriage, a truing tool on said carrier, and a feed mechanism interposed between the follower and carrier operatively connected to adjust the follower relative to the carrier so as to facilitate imparting a compensating adjustment to the truing tool.

2. In a grinding machine having a base, a transversely movable wheel slide thereon, a rotatable grinding wheel thereon, means to feed said slide transversely in a direction transverse to the wheel axis to facilitate grinding a work piece to a predetermined size, and a truing apparatus on said slide including a cross slide movable in a direction normal to the axis of the grinding wheel, means to move said cross slide in either direction, a longitudinally movable carriage on said cross slide movable in a direction normal to the cross slide, means to traverse said carriage longitudinally in either direction parallel to the axis of the grinding wheel, a longitudinally adjustable truing tool unit on said carriage including a slidably mounted truing tool carrier on said unit arranged to move in a direction normal to the axis of the grinding wheel, a forming bar on said cross slide, a follower on said carrier, means to maintain said follower in engagement with said bar during longitudinal movement of the carriage, a truing tool on said carrier, a feed mechanism interposed between the follower and carrier operatively connected to adjust the follower relative to the carrier, and a remote control means operatively connected to actuate said feed mechanism to facilitate imparting an incremental compensating adjustment to the truing tool.

3. In a grinding machine for grinding a plurality of spaced portions on a work piece having a base, a transversely movable wheel slide thereon, a plurality of spaced rotatable grinding wheels thereon, means to feed said slide transversely in a direction transverse to the wheel axis simultaneously to grind a plurality of spaced portions on a work piece to a predetermined size, and a truing apparatus on said slide including a cross slide movable in a direction normal to the axis of the grinding wheel, means to move said cross slide in either direction, a longitudinally movable carriage on said cross slide which is movable in a direction parallel to the wheel axis, means to traverse said carriage longitudinally in either direction parallel to the axis of the grinding wheel, a plurality of longitudinally adjustable truing tool units on said carriage each including a slidably mounted truing tool carrier arranged to move in a direction normal to the axis of the grinding wheel, a forming bar on said cross slide, a follower on each of said carriers, means to maintain said followers in operative engagement with said forming bar during longitudinal movement of the carriage, a truing tool on each of said carriers, and an independent feeding mechanism on each of said units interposed between the follower and carrier operatively connected to adjust the followers relative to the carriers to facilitate imparting an independent compensating adjustment to each of the truing tools.

4. In a grinding machine for grinding a plurality of spaced portions on a work piece having a base, a transversely movable wheel slide thereon, a plurality of spaced rotatable grinding wheels thereon, means to feed said slide transversely in a direction transverse to the wheel axis simultaneously to grind a plurality of spaced portions on a work piece to a predetermined size, and a truing apparatus on said slide including a cross slide movable in a direction normal to the axis of the grinding wheel, means to move said cross slide in either direction, a longitudinally movable carriage on said cross slide movable in a direction normal to said cross slide, means to traverse said carriage longitudinally in either direction parallel to the axis of the grinding wheel, a plurality of longitudinally adjustable truing tool units on said carriage each including a slidably mounted truing tool carrier arranged to move in a direction normal to the axis of the grinding wheels, a forming bar on said cross slide, a follower adjustably mounted on each of said carriers, means to maintain said followers in operative engagement with said forming bar during longitudinal movement of the carriage, a truing tool on each of said carriers, an independent feeding mechanism on each of said units interposed between the follower and carrier operatively connected to adjust the follower relative to the carrier, and remote control means operatively connected to actuate said feed mechanisms to facilitate imparting an independent compensating adjustment to each of said truing tools.

5. In a grinding machine as claimed in claim 1, in combination with the parts and features therein specified in which said feeding mechanism includes a nut and screw interposed between the follower and carrier, a pawl and ratchet mechanism operatively connected to rotate said feed screw, and a hydraulic piston and cylinder to actuate said pawl and ratchet mechanism so as to impart a compensating adjustment to the nut and screw mechanism.

6. In a grinding machine, as claimed in claim 3, in combination with the parts and features therein specified in which each of said feeding mechanisms includes a nut and screw interposed between each of the followers and carriers, an independent pawl and ratchet mechanism operatively connected to rotate each of said feed screws, and an independent hydraulic piston and cylinder to actuate each of said pawl and ratchet mechanisms so as to impart an independent compensating adjustment to each of said nut and screw mechanisms.

7. In a grinding machine as claimed in claim 3, in combination with the parts and features therein specified of means including a feed compensator mechanism, op-

erative connections between said compensator and said truing tool feeding mechanism, operative connections between said compensator and said wheel slide feeding means, and a manually operable control for said compensator whereby actuation of said compensator serves to impart a feeding movement to the truing tool slide and simultaneously to impart a compensating adjustment of the wheel feeding mechanism.

8. In a grinding machine as claimed in claim 1, in combination with the parts and features therein specified in which the feeding mechanism includes a nut and screw between the follower and carrier, a pawl and ratchet mechanism on said carrier operatively connected to rotate said feed screw, a hydraulic piston and cylinder on said carrier to actuate said pawl and ratchet to impart a predetermined compensating adjustment to the nut and screw mechanism, and means including an adjustable stop screw to limit the movement of said piston to facilitate varying the extent of the compensating adjustment.

9. In a grinding machine as claimed in claim 3, in combination with the parts and features therein specified in which the feeding mechanism on each of said units includes a nut and screw between the follower and carrier, an independent pawl and ratchet mechanism on each of said carriers operatively connected to rotate said feed screws, an independent hydraulic piston and cylinder on each of said carriers independently to actuate said pawl and ratchet mechanisms to impart a predetermined compensating adjustment to the nut and screw mechanisms, and means including an independent adjustable stop screw for limiting the movement of each of said pistons to facilitate independently varying the extent of the compensating adjustment of each of the truing tools.

10. In a grinding machine as claimed in claim 1, in combination with the parts and features therein specified in which said feeding mechanism includes a nut and screw interposed between the follower and carrier, a pawl and ratchet mechanism on said carrier operatively connected to rotate said feed screw, a piston and cylinder to actuate said pawl and ratchet mechanism so as to impart a predetermined compensating adjustment to the nut and screw mechanism, means including an adjustable stop screw for limiting the movement of said piston to facilitate varying the extent of the compensating adjustment, a remote control therefor including a solenoid-actuated control valve for controlling the admission to and exhaust of fluid from said cylinder, and a push button switch operatively connected to control actuation of said valve.

11. In a grinding machine as claimed in claim 3, in combination with the parts and features therein specified in which said feeding mechanisms on each of said units includes a nut and screw interposed between the follower and carrier, a pawl and ratchet mechanism on each of said carriers operatively connected to rotate said feed screw, an independent piston and cylinder to actuate each of said pawl and ratchet mechanisms so as to impart a predetermined compensating adjustment to the nut and screw mechanisms, means including an independent adjustable stop screw for limiting the movement of each of said pistons to facilitate varying the extent of the compensating adjustment, a remote control therefor including an independent solenoid-actuated control valve for controlling the admission to and exhaust of fluid from each of said cylinders, and an independent manually operable switch operatively connected to control actuation of each of said valves.

12. In a grinding machine as claimed in claim 3, in combination with the parts and features therein specified of an independent visible gage for each portion of the work piece being ground, a nut and screw mechanism to feed said wheel slide, a piston and cylinder operatively connected to rotate said feed screw, a control valve therefor operatively connected to control the admission to and exhaust of fluid from said cylinder, and means including a manually operable valve operatively connected to stop the infeed during a grinding operation when the gages indicate wheel wear to facilitate a grinding wheel truing operation.

References Cited in the file of this patent

UNITED STATES PATENTS

2,004,426	Booth	June 11, 1935
2,117,979	Ogilvie	May 17, 1938
2,150,091	Alvord	Mar. 7, 1939
2,310,977	Mathys	Feb. 16, 1943
2,335,207	Flygare	Nov. 23, 1943
2,576,239	Reimschissel	Nov. 27, 1951
2,597,242	Hill	May 20, 1952