J. F. O'DONNELL.

VALVE MECHANISM.

APPLICATION FILED OCT. 16, 1916.

1,251,563.

Patented Jan. 1, 1918.

2 SHEETS—SHEET 1.

Fig. 1

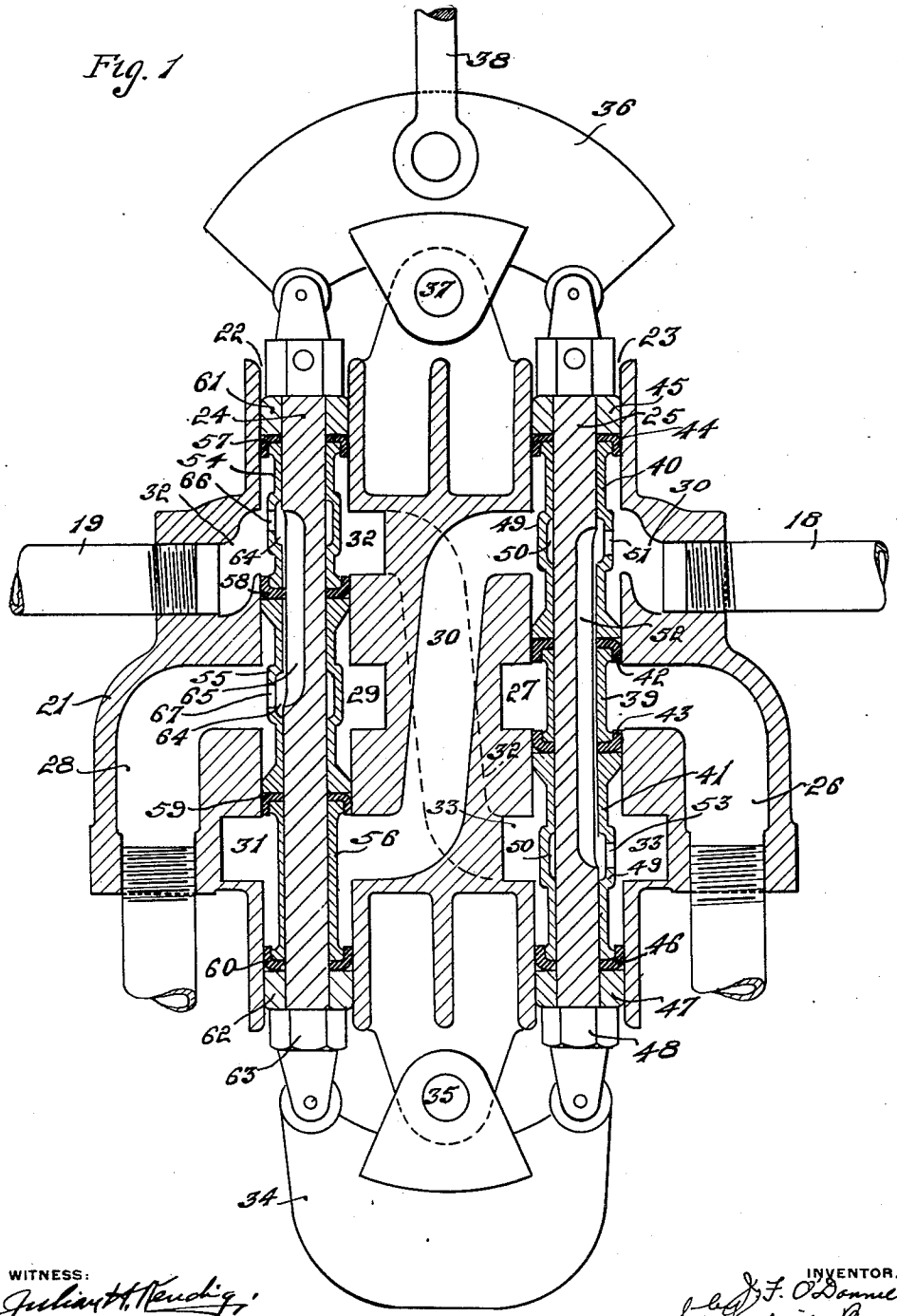

WITNESS:

Julian H. Reading

INVENTOR.

J. F. O'Donnell

by Synnestvedt & Bradley

Lechner & Fawkes.

ATTORNEYS.

J. F. O'DONNELL.
VALVE MECHANISM.
APPLICATION FILED OCT. 16, 1916.

1,251,563. Patented Jan. 1, 1918.

2 SHEETS—SHEET 2.

Fig. 2

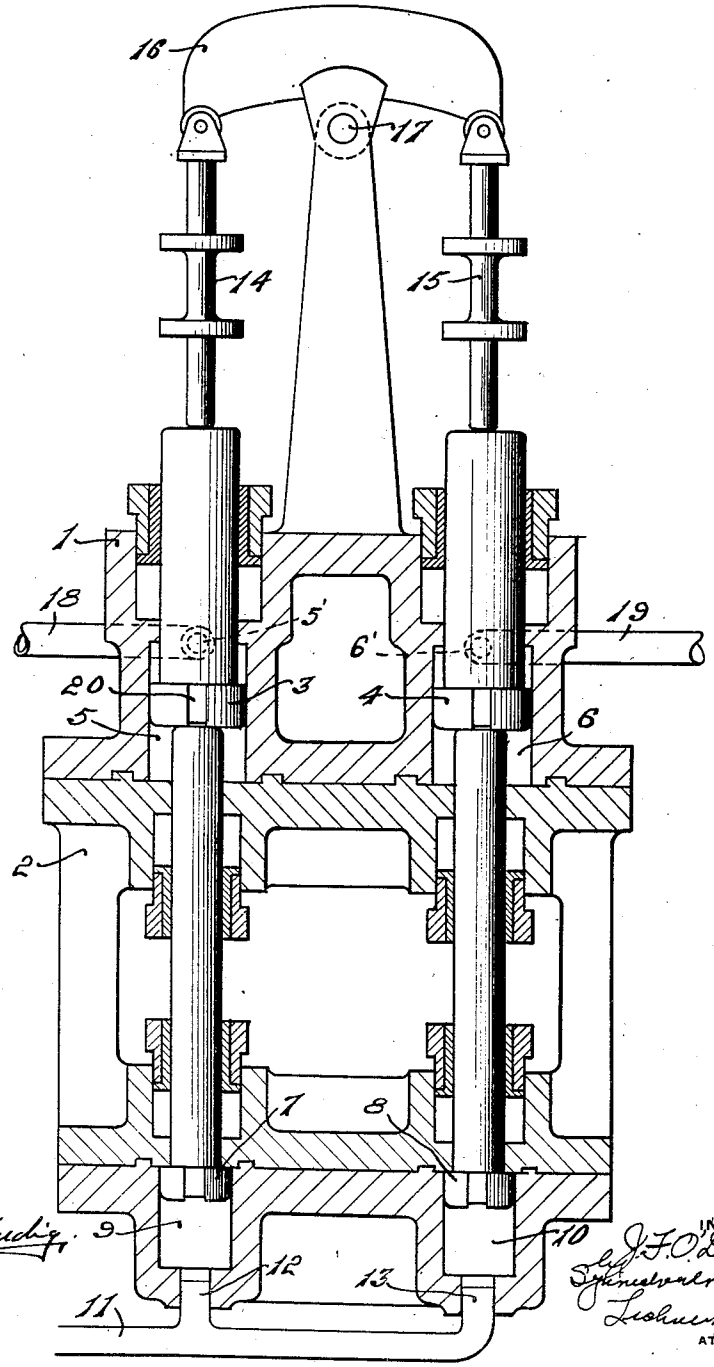

WITNESS:
Julian H. Kendig.

INVENTOR:
J. F. O'Donnell
by Synnestvedt & Bradley
Lechner & Fawkes.
ATTORNEYS.

UNITED STATES PATENT OFFICE.

JOHN F. O'DONNELL, OF MIDLAND, PENNSYLVANIA.

VALVE MECHANISM.

1,251,563. Specification of Letters Patent. Patented Jan. 1, 1918.

Application filed October 16, 1916. Serial No. 126,048.

To all whom it may concern:

Be it known that I, JOHN F. O'DONNELL, a citizen of the United States, residing at Midland, in the county of Beaver and State of Pennsylvania, have invented certain new and useful Improvements in Valve Mechanism, of which the following is a specification.

This invention relates to valve mechanism and more particularly to that class of valves used in controlling ingot turning machinery in "blooming" mills, or other heavy machinery wherein a main valve of considerable size is controlled by a comparatively small pilot valve. Main valves for the operation of such machines usually have a neutral or central position. When the valve is in neutral position the machine under its control is stationary. When the valve is shifted in one direction the machine continues to move in that direction until it reaches the limit of its travel or until the valve is returned to neutral, at which time, under the latter circumstance, the machine will come to a stop before it has reached the limit of its travel. Reversal of the position of the valve will cause the machine to reverse.

When a pilot valve is used to control the main valve, it is the custom to provide a pilot valve having a neutral or central position, and so connected to the main valve that when the pilot valve is in central or neutral position the main valve will be caused to move to central position. When the pilot valve is moved in one direction, its movement causes movement of the main valve in a similar direction.

The principal objects of this invention are the provision of a main valve operating mechanism that is simple and efficient, the provision of a valve that requires very little attention and repair, the provision of a valve mechanism that is easily operated and in which the wear of the packing elements and other vital parts is reduced to a minimum; the provision of a construction and arrangement of parts whereby a well known valve of the "Aiken" type, which has for years been successfully used as a main valve, may be converted into a pilot valve, giving to the pilot valve all the well known advantages of the "Aiken" type main valve; and such other objects as may hereinafter appear. One embodiment of the invention is shown in the accompanying drawings, wherein—

Figure 1 is a longitudinal section through a pilot valve and Fig. 2 is a longitudinal section on a reduced scale showing the centering motor and the spindles of the main valve.

Referring to the drawings and more particularly to Fig. 2, the main valve and centering motors will be described. This part of the apparatus is of the usual type and the spindles of the "Aiken" main valve are diagrammatically shown. The motor may, however, be used to operate any form of oscillating or reciprocating valve. 1 is a cylinder casing supported upon the frame 2; 3 and 4 are the motor pistons for operating the main valve; 5 and 6 are cylinders in which the motor pistons 3 and 4 reciprocate, respectively; 7 and 8 are centering pistons mounted in line with the motor pistons 3 and 4, respectively, and are for the purpose of normally moving the motor pistons to central position; 9 and 10 are cylinders in which the centering pistons 7 and 8 reciprocate, respectively; 11 is a supply pipe for constantly supplying fluid pressure to the pistons 7 and 8 through the branch tubes 12 and 13, respectively. Constant pressure on the under face of the pistons 7 and 8 causes them to be normally held in raised position as indicated in Fig. 2. The upper ends of the pistons 7 and 8 engage the lower ends of the motor pistons and support them in centered position.

The main valve may be of any type and for the purpose of illustration, a pair of main valve spindles or pistons 14 and 15 are shown, alined with the motor pistons 3 and 4 respectively. The upper ends of the main valve pistons are pivotally connected to a rocking lever 16 which oscillates upon a pivot shaft 17. Instead of the two spindle type of valve shown, an oscillating valve may be secured to the pin 17 and operated with the motor just described.

The operation of the motor and main

valve is as follows: A constant source of pressure is applied to the passage 11 which enters the cylinders 9 and 10 through the branch pipes 12 and 13. This pressure constantly exerted upon the lower ends of the pistons 7 and 8 normally holds them in raised position. The cylinders 5 and 6 are supplied with fluid pressure through ports 5′ and 6′ connected to pipes 18 and 19 leading to the pilot valve, to be hereinafter described. When pressure is supplied to the cylinder 5 the fluid in the cylinder passes the enlarged portion of the piston 3 through a slot 20 cut from one face of the enlarged portion to the other, thereby causing pressure to be exerted upon the under side of the piston 3, which action causes the piston 3 to be moved upward, moving with it the main valve spindle 14. This action also raises the left end of the rocking lever 16 thereby lowering the right end of the rocking lever which pushes down the valve spindle 15 and with it the motor piston 4. The pressure usually supplied to the cylinder 5 is about 600 pounds per square inch and as the area of the piston 3 is greater than the area of the lower end of the piston 8, the pressure exerted upon the piston 8 will be overcome by the superior pressure exerted downward on the motor piston 4.

If pressure in the passage 19 is supplied to the cylinder 6, the motor piston 4 will be raised, causing the valve spindle 15 to be raised with it and the valve spindle 14 to be lowered, thus reversing the action of the main valve.

In general practice the main valve is supplied with a supply passage and exhaust passage and two passages leading to each end of an operating cylinder. The valve ports are so arranged that when the main valve spindles are in their central or neutral position the passages leading to the cylinder are closed off from communication with both the supply and exhaust passages of the main valve, thereby causing the piston in the operating cylinder to remain stationary while the valve is in neutral or central position, regardless of the position of the piston in the operating cylinder.

The main valve and the motor for operating it just described are controlled by a pilot valve illustrated in Fig. 1. This valve consists of a main casing 21 provided with a pair of cylinders 22 and 23 in which are mounted for reciprocation a pair of valve spindles 24 and 25, respectively. The casing is provided with a fluid supply passage 26 communicating with the cylinder 23 adjacent its center at 27. The casing is also provided with an exhaust passage 28 communicating with the cylinder 22 adjacent its center at 29. The pipe 18 leading from the cylinder 5 in the motor is connected to the pilot valve casing 21 and a passage 30 leads therefrom to the cylinder 23 above the supply chamber 27 and passes down through the casing 21 and communicates with the cylinder 22 below the exhaust chamber 29 at 31. The pipe 19 leading from the cylinder 6 of the motor is connected to the casing 21 and a passage 32 leads therefrom to the cylinder 22 above the exhaust chamber 29 and continues downward through the casing and communicates with the cylinder 23 below the supply chamber 27 at 33.

The pilot valve spindles 24 and 25 are pivotally connected at their lower ends by a rocking lever 34 which oscillates about the pivot shaft 35 and are pivotally connected at their upper ends by a rocking lever 36 adapted to oscillate about the pivot shaft 37. An operating handle 38 is secured to the rocking lever 36 and movement of the handle to the right or left will cause the spindles 24 and 25 to reciprocate within their respective cylinders.

The spindle 25 comprises a solid shaft upon which is mounted a central sleeve 39 and a pair of valve sleeves 40 and 41. Packing leathers 42 and 43 are placed between the valve sleeves and the central sleeve 39. A packing leather 44 is placed between the upper end of the valve sleeve 40 and a collar 45 carried at the upper end of the spindle shaft. This is to prevent leakage of fluid from the upper end of the cylinder 23. Leakage at the lower end of the cylinder 23 is prevented by a packing washer 46 clamped between the valve sleeve 41 and a collar 47. The sleeves, collars and packing washers are all firmly clamped together by means of the nut 48 which is screwed to the lower end of the spindle shaft.

The sleeves 40 and 41 are each provided with an enlarged central section 49 which provides an annular recess 50 through which fluid may circulate around the spindle shaft. The sleeve 40 is provided with a port 51 leading from the passage 30 to the annular recess 50. The spindle shaft of the valve spindle 25 is provided with a longitudinal groove 52 which extends from the annular recess 50 in the sleeve 40 to the annular recess 50 in the sleeve 41, and communication between this groove and the passage 32 in the valve casing is established by means of the port 53 extending through the enlarged portion 49 of the valve sleeve 41.

The valve spindle 24 comprises a solid spindle shaft extending through the cylinder 22 upon which is mounted a pair of valve sleeves 54 and 55 and a spacing sleeve 56 is carried at the lower end thereof. This spindle is also provided with packing washers 57, 58, 59 and 60 securely clamped between the sleeves, the packing 57 being clamped between the sleeve 54 and a collar 61 for the purpose of preventing leakage of fluid from the upper end of the cylinder

22, and the packing 60 being clamped between the sleeve 56 and the collar 62 for the purpose of preventing leakage of fluid from the lower end of the cylinder 22. The sleeves, collars and washers are securely clamped together by means of the nut 63 which is screwed upon the lower end of the spindle shaft. The sleeves 54 and 55 are each provided with an enlarged central portion which provides an annular recess 64 in each sleeve. The spindle shaft is provided with a longitudinal groove 65 establishing communication between the annular recesses 64. The port 66 in the valve sleeve 54 establishes communication between the passage 32 in the valve casing and the recess 64 in the valve sleeve 55, and communication is established between the exhaust chamber 29 and the recess 64 in the valve sleeve 55 by a port 67 extending through the valve sleeve 55.

The primary function of the grooves 65 in the spindle 24 is to establish a constantly open exhaust passage from the cylinder 6 of the motor through the pipe 19, passage 32, port 66, groove 65, port 67 to exhaust port 28. The ports 66 and 67 are comparatively small with respect to the capacity of the passage 32, pipe 19 and port 6′ in the motor cylinder 6. Therefore, when pressure is exerted in the passage 32 by the admission of fluid pressure therein the leakage of fluid through the port 66 to the exhaust will not materially affect the ultimate pressure in the cylinder 6 of the motor.

The primary function of the groove 52 in the valve spindle 25 is to establish a constantly open exhaust passage from the passage 30 through the port 51, groove 52, port 53, chamber 33, passage 32, port 66 in the valve sleeve 54 on the valve spindle 24, groove 65, port 67, to exhaust passage 28. The area of the ports 51 and 53 is comparatively smaller than the area of the passage 30, pipe 18, and port 5′ which communicates with the motor cylinder 5. This constantly open communication with the exhaust, therefore, does not materially diminish the pressure in the motor cylinder 5 when fluid pressure is supplied to the passage 30. The purpose of maintaining these constantly open exhaust passages will appear later.

This pilot valve has a neutral or central position and two operative positions. The spindles are shown in their neutral or central position in Fig. 1. The supply passage 26 is constantly in communication with a source of fluid pressure and it will be seen that when the spindles are in the position illustrated, fluid cannot enter either the passage 30 or chamber 33 and that the only means of exhaust from chambers 30 and 32 is through the exhaust passages just described, leading through the valve spindles. When the operating lever 38 is moved to the right the valve spindle 25 will be lowered permitting fluid pressure to flow past the lower end of the valve sleeve 40 into the passage 30 through the pipe 18 to the motor cylinder 5. This action will cause the piston 3 to be raised. At this time the valve spindle 24 will be raised permitting pressure in the motor cylinder 6 to have quick escape past the upper end of the valve sleeve 55 into the exhaust chamber 29 and thence to the exhaust passage 28. The main valve will be operated to permit movement of the piston in the motor cylinder (not shown) to continue as long as the pilot valve handle is out of neutral position. When it is desired to stop the operation of the machine the valve handle 38 is moved to central or neutral position. In order that the main valve can be moved subsequently to neutral position, pressure must be relieved from the motor cylinders 5 so that the centering piston 8 may return the motor pistons to their central or neutral position.

If the operating handle 38 is moved to the left the spindle 24 will be lowered and the spindle 25 raised. In this position fluid will pass from the supply passage 26 past the upper end of the valve sleeve 41 into the chamber 33 through passage 32 in the valve casing through pipe 19 to the motor cylinder 6. This will cause the motor piston 4 to rise, thereby shifting the main valve in the reverse direction causing the reversal of the piston in the motor cylinder (not shown). At this time fluid pressure in the cylinder 5 will rapidly exhaust through pipe 18, passage 30 past the lower end of the valve sleeve 55 into exhaust chamber 29 and thence to exhaust passage 28. When it is desired to stop the movement of the piston in the operating cylinder the pilot valve must be moved to central or neutral position. After this has been done fluid pressure must be exhausted from the motor cylinder 6 in order that the centering piston 7 may move the motor piston 3 to central position. The pressure in the cylinder 6 is exhausted at this time through the pipe 19, passage 32, port 66, groove 65, port 67, and exhaust passage 28.

It will be observed that when the pilot valve is in neutral position that no water will waste through the exhaust passages after the pressure has been relieved from the cylinders 5 and 6 and that only a small quantity of water wastes through such passages when the valve is moved out of neutral or central position.

Heretofore the main valve had been controlled by pilot valves having packing washers usually expanded against the interior walls of the cylinders. The cylinder is usually perforated by small holes at the point where the fluid passes out into the pipes con-

necting the pilot valve with the main valve. These perforations act similar to a file in cutting and wearing the packing washers, as a consequence of which the packing washers must be replaced very frequently and considerable leakage and waste of water is the result of their use. The type of valve herein illustrated and used as a pilot valve has been successfully used for years as a main valve in steel mill work. This valve is a success as a main valve because the washers are at no time sawed over perforated cylinder walls. Without the use of the constantly open exhaust passages illustrated as being applied to the valve spindles, this type of valve could not be successfully operated as a pilot valve. Therefore, the provision of suitable exhausting means has made it possible to convert a highly efficient main valve into an equally efficient pilot valve for controlling the main valve. It is obvious that a number of changes may be made in the details of the construction without departing from the spirit of the invention, and the invention is, therefore, not limited to the specific means herein illustrated and described for providing a constant exhaust from the motor cylinders.

What I claim is:

1. A valve mechanism comprising in combination, a main valve, means for normally centering the main valve, fluid operated motor pistons mounted in suitable cylinders for moving the main valve out of central position in either direction, constantly open exhaust ports in communication with the cylinders for relieving the pressure on the motor pistons, fluid supply ports in communication with the cylinders having greater capacity than the exhaust ports for admitting pressure to the motor pistons, and a pilot valve for controlling the supply ports adapted to close them when the pilot valve is in central position.

2. A valve mechanism comprising in combination, a main valve, means for normally centering the main valve, fluid operated motor pistons mounted in suitable cylinders for moving the main valve out of central position in either direction, fluid supply ports in communication with the cylinders for admitting pressure to the motor pistons, a pilot valve having a supply passage and an exhaust passage controlled by a pair of coöperating pistons for controlling the fluid pressure to the motor piston cylinders, adapted to close the supply ports from communication with the supply and exhaust chambers when the valve pistons are in central or neutral position, and a pair of exhaust passages extending through the valve pistons establishing constant communication between the supply ports and the exhaust chamber, the said exhaust passages having less capacity than the supply ports.

3. The combination with a normally centered main valve and an operating motor therefor having separate motor chambers, of a pilot valve for controlling the operating motor comprising a casing, reciprocal valve mechanism in the casing, a pair of pressure passages each establishing communication between the valve mechanism and a separate motor chamber, a pressure supply inlet in communication with the valve mechanism, an exhaust passage in communication with the valve mechanism, the said supply inlet and exhaust passage and pressure passages being located so that when the valve mechanism is in neutral or central position communication between the pressure passages and the supply inlet and exhaust passage is closed and when the valve mechanism is in operative position in either direction past neutral position, communication between one pressure passage and supply inlet will be established and communication between the other pressure passage and the exhaust passage is also established, whereby pressure is supplied to one motor chamber and exhausted from the other, and an auxiliary exhaust passage through the valve mechanism having less capacity than the pressure passages adapted to constantly establish communication between the pressure passages and the exhaust passage whereby the pressure in the motor chambers may be released when the valve mechanism is in neutral position.

4. In combination a normally centered main valve and an operating motor therefor, a pilot valve for controlling the operating motor of a normally centered main valve, a casing, a pair of valve cylinders in the casing, a supply control valve in one cylinder, an exhaust control valve in the other cylinder, a pair of pressure passages each communicating with the supply control cylinder, the exhaust control cylinder and separate operating chambers in the main valve motor, a pressure supply inlet in communication with the supply control cylinder, an exhaust passage in communication with the exhaust control cylinder, a supply control piston valve in the supply control cylinder adapted when in neutral or central position to cut off communication between the supply inlet and the pressure passages and in operative position in either direction past center position, to establish communication between either one of the pressure passages, an exhaust control piston in the exhaust control cylinder adapted when in neutral or central position to close communication between the pressure passaages and the exhaust passage and in operative position in either direction past center position to establish communication between either one of the pressure passages and the exhaust passage, a connection be-

tween the valve pistons whereby movement of the supply control piston to open one pressure passage to the supply inlet causes the exhaust supply piston to open the opposite pressure passage to the exhaust passage, and exhaust passages in the pistons of less capacity than the pressure passages, adapted to constantly establish communication between the pressure passages and the exhaust passage whereby the pressure in the motor chambers may be released when the valve pistons are moved to neutral position.

JOHN F. O'DONNELL.