F. H. HAMMERLE.

TICKET HOLDER.

APPLICATION FILED APR. 25, 1919.

1,377,576. Patented May 10, 1921.

FIG. 1.

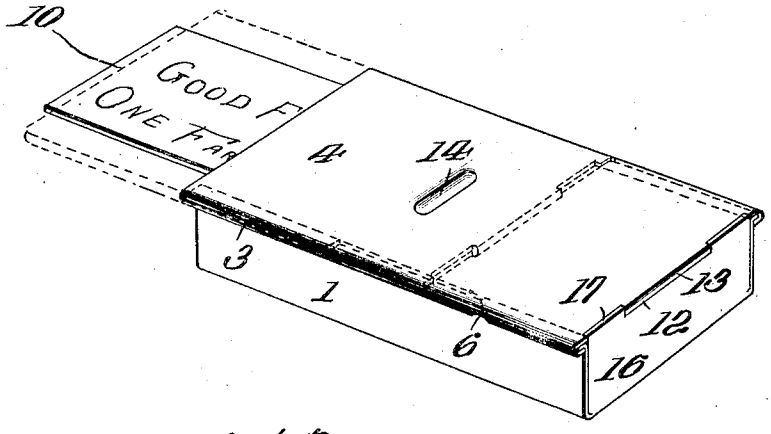

FIG. 2.

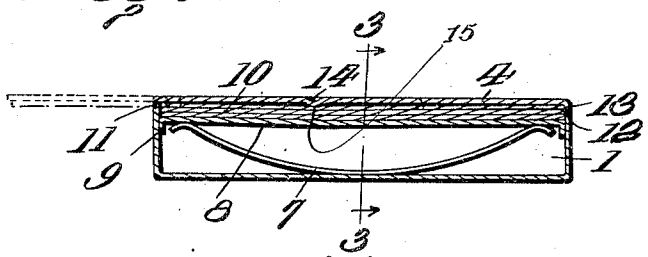

FIG. 3.

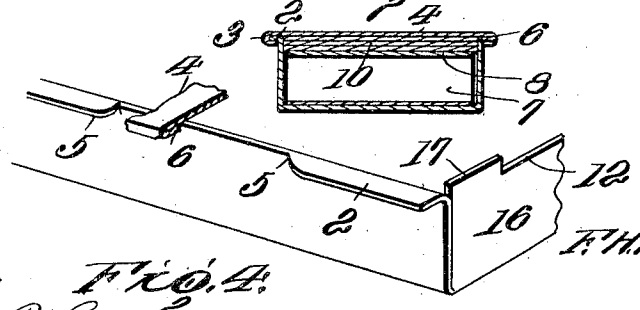

FIG. 4.

Witness
Floyd P. Cornwall.

Inventor
F. H. Hammerle.

By Albright
Attorney

UNITED STATES PATENT OFFICE.

FRANK H. HAMMERLE, OF WILMERDING, PENNSYLVANIA.

TICKET-HOLDER.

1,377,576. Specification of Letters Patent. Patented May 10, 1921.

Application filed April 25, 1919. Serial No. 292,576.

To all whom it may concern:

Be it known that I, FRANK H. HAMMERLE, a citizen of the United States, residing at Wilmerding, in the county of Allegheny and State of Pennsylvania, have invented certain new and useful Improvements in Ticket-Holders, of which the following is a specification, reference being had therein to the accompanying drawing.

This invention relates to certain new and useful improvements in ticket holders, the object being to provide a ticket holder which is exceedingly cheap and simple in construction, and one in which the tickets therein can be forced out of the same by the movement of the cover, whereby the tickets can be dispensed one at a time.

Another object of my invention is to provide a ticket holder in which the case or box is formed of a single piece of metal bent into the desired shape and provided with guide-flanges which are embraced by guide-ways formed on the cover which holds the box in its proper shape and provides means for allowing the cover to slide thereon so as to dispense the tickets therein.

With these and further objects and advantages of the invention, the invention consists in the novel features thereof defined by the appended claims.

In the drawings:

Figure 1 is a perspective view of my improved construction of ticket holder showing in dotted lines the cover moved into position to dispense one of the tickets therein.

Fig. 2 is a longitudinal vertical section through the holder.

Fig. 3 is a section taken on line 3—3 of Fig. 2, and

Fig. 4 is a detail perspective view showing the manner of securing the cover in position upon the case in order to allow a limited movement thereof.

In carrying out my invention I employ a rectangular box 1, preferably formed of sheet metal having its side edges flanged laterally to provide guides 2 which are adapted to be embraced by guide-ways 3 formed on the edges of a cover 4, said guide-ways being preferably U-shaped in cross section as clearly shown so that when the cover is in position on the case the sides of the case will be held in vertical position. One of the guides is cut away as shown at 5 in which travels the lug 6 of the guide-ways 3 so as to limit the movement of the cover on the case.

Mounted within the box is a bowed spring 7 carrying a plate 8 provided with depending ends 9, said plate forming a spring support for the tickets 10 arranged within the case as clearly shown. One end of the box is cut away as shown at 11 to allow a ticket to be forced out of the same and the opposite end is provided with a notch 12 into which extends a depending lug 13 formed on the cover 4 which is adapted to engage the opposite end of the ticket to force the same out of the case when the cover is moved by the operator and as the cover is provided with means for limiting the movement, a portion of the ticket will be extended beyond the case so that when the cover is returned, the ticket can be readily withdrawn.

In order to provide means for preventing the tickets when being inserted from being forced out of the cut away portion 11, I provide the cover with an indentation 14 which forms a lug 15 on its under surface which extends over the cut away portion when the cover is in an extended position, and when the cover is in a closed position acts on the upper ticket in such a manner that the end thereof has a tendency to flex or move upwardly in alinement with the cut away portion so that when the cover is moved into opened position, it will pass freely out of the cut away portion. The end 16 of the box containing the notch 12 extends upwardly as shown at 17 in the path of travel of the cover so as to form stops which prevent the cover from moving off the receptacle in the opposite direction.

From the foregoing description, it will be seen that I have provided a ticket holder which is so constructed that a very strong and durable case is provided which will stand rough usage, and one in which the tickets can be readily inserted or placed in position within the case by moving the cover in opened position, and by the construction shown if a ticket is withdrawn and not used, the same can be readily placed back in the case.

I claim:

1. A ticket holder comprising a case provided with a slidably mounted cover having means for limiting the movement thereon, said case having an opening at one end, a spring support mounted within said case

for supporting the ticket therein, a lug formed on one end of the cover adapted to engage the end of the ticket and a lug formed on said cover adapted to close said opening when said cover reaches its limit of travel on said case.

2. A ticket holder comprising a case having a cover slidably mounted thereon, said case having an opening at one end at the upper edge thereof, a spring support arranged within the case for supporting tickets therein, a lug formed on one end of said cover adapted to engage the end of the ticket and force the same out of the opening of said case when the cover is moved in one direction and a depending lug formed on said cover for closing said opening when said cover is moved outwardly to dispense the ticket for preventing the tickets being inserted from passing out of said dispensing opening.

3. A ticket holder comprising a case having a cover slidably mounted thereon, said case having a dispensing opening at one end, a spring support arranged within the case for supporting the tickets therein, said case having a notch at the opposite end thereof, a lug formed on one end of said cover working in said notch for engaging the end of the ticket for forcing the same out of the dispensing opening of said receptacle and a depending lug formed on the under side of said cover adapted to engage the upper ticket within said receptacle for flexing said ticket to bring one end of said ticket in alinement with said dispensing opening and the other end of said ticket in position to be engaged by the first mentioned lug.

In testimony whereof I hereunto affix my signature in the presence of two witnesses.

FRANK H. HAMMERLE.

Witnesses:
NORMAN A. GOODE,
W. T. BALSLEY.