Oct. 12, 1971 H. J. FOLSON 3,611,621

BUILDING UNIT TOY

Filed May 15, 1969

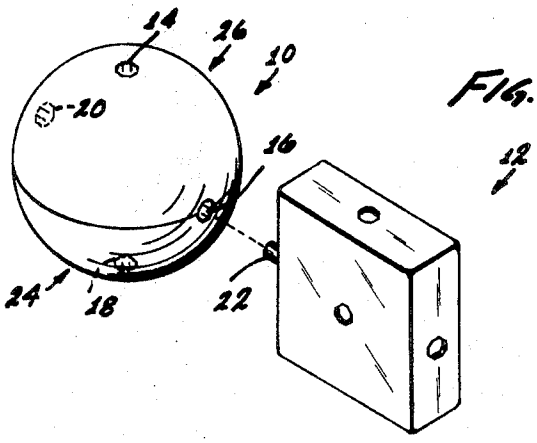

FIG. 1

FIG. 3

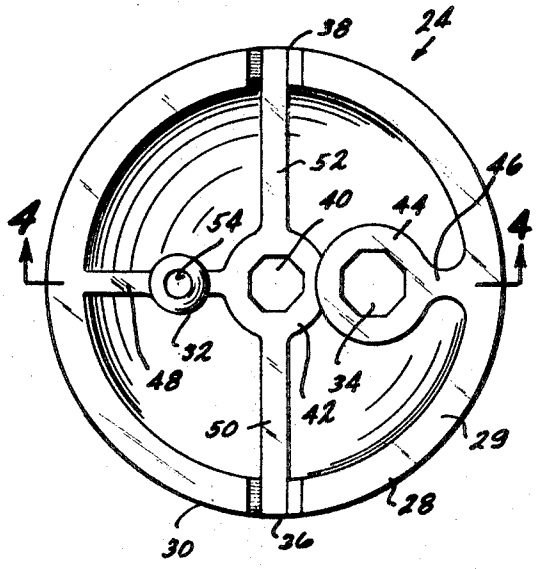

FIG. 2

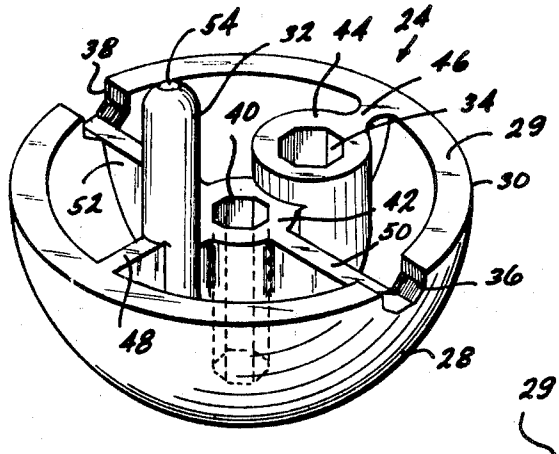

FIG. 4

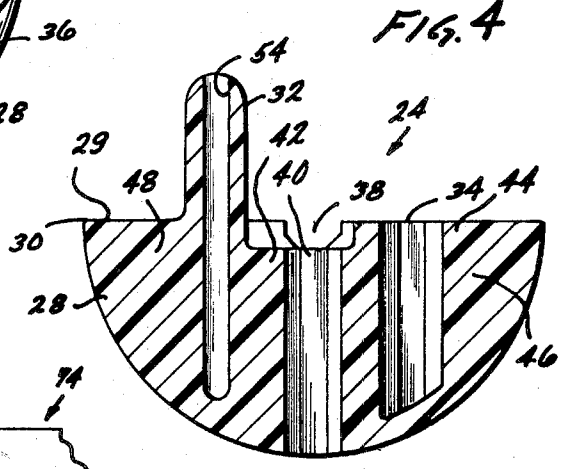

FIG. 5

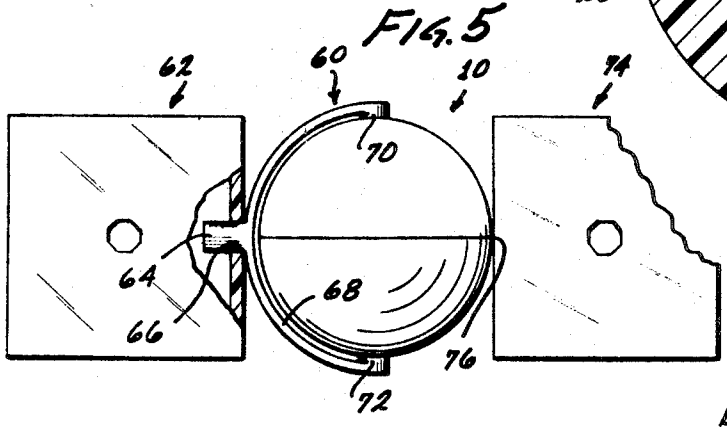

INVENTOR

HENRY J. FOLSON

BY Max E. Shirk

ATTORNEY

United States Patent Office 3,611,621
Patented Oct. 12, 1971

3,611,621

BUILDING UNIT TOY

Henry J. Folson, Redondo Beach, Calif., assignor to Mattel, Inc., Hawthorne, Calif.

Filed May 15, 1969, Ser. No. 824,795
Int. Cl. A63h 33/08
U.S. Cl. 46—25 2 Claims

ABSTRACT OF THE DISCLOSURE

A toy building unit of spherical shape with four holes spaced around its outer surface for receiving pins to join it to other building units. Each spherical building unit is formed of two identical molded elements, each element forming a hemisphere with a stud extending toward the other element and a hole for receiving the stud of the other element.

BACKGROUND OF THE INVENTION

Field of the invention

This invention relates to building block type toys.

Description of the prior art

One type of building unit toy utilizes cube-shaped blocks with holes or studs at its faces for joining to other similar blocks. Such blocks could be formed by simply injecting plastic into a cube-shaped cavity with cores or recesses to form pin or pin-receiving holes at the faces. However, such a method would require considerable plastic for each solid block thereby increasing the cost for materials, would require considerable time for cooling each block in the mold thereby slowing production, and would generally produce somewhat distorted blocks because of unequal cooling of the large mass. A design which eliminates these disadvantages comprises a block in the form of a relatively thin-walled box or shell with a cover joined to one top edge by a thin flexible web of plastic. The cover and box are molded together, and the cover is then closed on the box and snapped into it to form a cube.

Another interesting form of toy building unit would be a sphere. A sphere would be difficult to economically mass produce by merely injecting plastic into a substantially spherical cavity for the same reasons mentioned for a cube, including the large amount of material, slowness of cooling, and likelihood of distortion. A sphere also cannot be readily formed by molding a shell with a cover joined thereto by a web, as can a cube. One reason is that the joining web would have to be very short, and therefore weak, or it wouldn't close. Another reason is that the shell could not be a greater part of a sphere than a hemisphere, or else the molding core that forms the inside surface could not be readily removed, and if the lower shell and cover were hemispheres they could not be readily snapped together as can a flat cover on a cubical box.

OBJECTS AND SUMMARY OF THE INVENTION

One object of the present invention is to provide an entertaining toy building unit.

Another object is to provide economically and easily mass-produced toy building apparatus.

In accordance with the present invention, a building unit is provided which is composed of a pair of substantially identical halves or elements, each element having a stud extending toward the other element and a hole for receiving the stud of the other element. In one embodiment of the invention, the elements are hemispheres which can be joined together to form a spherical building unit. The units can be joined to other spherical or

cubical units by projecting a pin formed in one unit into a pin-receiving hole formed in the other. Each hemispherical element has a perimeter which forms one-half of an aperture or pin, a pair of such elements together forming a complete pin or pin-receiving aperture where they meet.

A yoke is also provided for joining a spherical unit to another unit in a manner to permit rotation of the spherical unit while holding it securely to the other unit. This permits the building of a strong structure with movable sections.

The novel features of the invention are set forth with particularity in the appended claims. The invention will be best understood from the following description when read in conjunction with the accompanying drawings.

BRIEF DESCRIPTION OF THE DRAWINGS

FIG. 1 is a perspective view of a spherical building unit constructed in accordance with the invention, showing its manner of joining to another form of unit;

FIG. 2 is a perspective view of a hemispherical element forming one-half of the spherical unit of FIG. 1;

FIG. 3 is a plan view of the element of FIG. 2;

FIG. 4 is a sectional view taken on the line 4—4 of FIG. 3; and

FIG. 5 is a side elevation view of a yoke apparatus constructed in accordance with the invention.

DESCRIPTION OF THE PREFERRED EMBODIMENTS

FIG. 1 illustrates a spherical building unit **10** constructed in accordance with the invention, indicating the manner in which it can be joined to another building unit of the same or different form, such as a cubical unit **12**. The spherical unit **10** has four pin receiving holes **14**, **16**, **18** and **20** spaced 90° from each other around a great circle of the sphere. The other unit **12** has a pin **22** which can be received in any of the pin receiving holes to join the units together. The four pin receiving holes of the spherical unit enable it to be joined to units on either side and above and below it, to form a large construction project. If desired, the unit can be constructed with six holes, all spaced 90° from each other.

The spherical unit **10** is composed of a pair of identical halves or elements **24** and **26**, one of these elements being shown in detail in FIGS. 2–4. The building element is of substantially hemispherical shape, including a substantially hemispherical shell **28** with a base or perimeter portion **30** which abuts the perimeter portion of another element when they are joined to form a sphere. Each element also has a stud **32** extending from it toward the other element to which it is joined, and a stud receiving hole **34** extending parallel to the stud for receiving a stud of the other element. Thus, two elements can be joined together by projecting the studs **32** into the stud receiving holes **34**. The studs and receiving holes are dimensioned so as to provide a slight interference fit between them, whereby to securely hold them together once they are joined. The hemispherical outer surface of each element produces a sphere when the elements are joined while the stud or male coupling and hole or female coupling on the end of the element permits rapid joining of substantially identical elements.

The perimeter portion **30** of the shell also has a pair of recesses **36**, **38**, each of which forms half of one pin receiving hole **16**, **20** of the completed spherical unit. When two elements are joined together, their recesses are aligned with recesses **36**, **38** to complete the pin-receiving holes. The element **24** also has a complete pin receiving hole **40** at its center (corresponding to hole **18** in FIG.

1). The hole **40** has walls **42** extending a substantial distance into the element.

The stud receiving hole **34** has walls **44** surrounding it, which are joined by a web portion **46** to the shell **28** of the element. The web **46**, walls **44** of the stud receiving hole, walls **42** of the pin receiving hole, stud **32**, and a flange **48** extending from the stud to the shell, form a bracing structure extending across the base portion of the shell to strengthen it against compression forces which might be applied to the shell near its base. Another pair of flanges **50**, **52** extending from the recesses **36**, **38** to the walls **42** of the pin receiving hole **40** strengthen the element against compression forces applied perpendicular to the bracing structure formed, in part, by the stud and walls of the stud receiving hole. Thus, although the hemispherical element is largely hollow, it is strong.

The hemispherical element **24** is designed for high speed production by common injection molding processes, using two-piece dies. In order to permit rapid, substantially distortionless cooling, all of the walls of the element must be no greater than a predetermined thickness. To this end, the stud **32** is provided with a hole **54**. The walls of the rest of the element can also be easily controlled to have no more than the maximum permissible thickness.

The elements can be joined into spherical units at the factory, or may be supplied as separate elements to be joined by a child. If it is desired to make the joining more permanent, a thin layer of glue can be applied to the base surface **29** of the element which abuts the base surface of the other element. The spherical building unit can be joined to cubical units of the type shown in FIG. 1 or to other spherical units or to units having other than spherical shapes. If it is desired to permit rapid joining to other spherical units, one of the elements of the unit should have a pin coupling projecting therefrom in place of one of the hole couplings. This can be accomplished, for example, by forming the hemispherical unit with a pin instead of the hole **40**. In that case, each spherical unit would have two pins and two holes. Another way of providing pins is to substitute a pin for one of the recesses such as recess **36** at the base of the hemisphere. If desired, six pin or hole couplings can be provided on the spherical unit instead of the four shown in the figures.

FIG. 5 illustrates a yoke **60** constructed in accordance with the invention for pivotally coupling the spherical building unit **10** to another building unit **62**, in a secure manner. The yoke comprises a pin **64** designed for reception in a pin-receiving hole **66** in another building unit, a bifurcated frame **68** with arms extending from the pin **64**, and bearings **70**, **72** at the ends of the frame. The bearings **70**, **72** are male bearings which are received in the pin receiving holes of the spherical member **10**, but in a manner to allow easy rotation of the spherical member **10**. Another unit **74** can be joined to another hole coupling **76** of the spherical unit, and additional units can be joined to unit **74**. The yoke **60** and spherical unit **10** provide an easily rotated pivotal joint between the units **62** and **74**. In cases where it is desired to join the yoke to a spherical unit which is constructed with pins that extend from opposite sides thereof instead of with hole couplings, the yoke can be provided with female bearing couplings instead of the male bearings at **70**, **72**.

The spherical building unit is an interesting shape which creates attractive structures when used either alone or in combination with cubical building blocks. However, the unit can have a variety of other shapes, such as oval or more complicated forms. Any of such units, as well as the cubical units, can be constructed using substantially identical halves formed in the manner described above. As noted above, the substantially identical halves can be different in minor ways, e.g. one may have a hole coupling while the other has a pin coupling at corresponding positions thereon.

Although particular embodiments of the invention have been illustrated herein, it is recognized that modifications and variations may readily occur to those skilled in the art, and consequently it is intended that the claims be interpreted to cover such modifications and equivalents.

What is claimed is:

1. Toy building apparatus comprising:

an element having a substantially hemispherical outer surface and male and female coupling members extending from the inner surface thereof for joining to a substantially identical element to form substantially a sphere,

said element including a shell with an outer surface defining said substantially hemispherical surface, a stud extending from the inside of said shell at one side of the center of said shell, and a stud-receiving member extending from the inside of said shell at a side of said shell opposite said stud, walls defining a pair of recesses in said shell at opposite sides of the base of said hemispherical surface; and

bracing web means extending across said shell between said recesses.

2. Toy building apparatus comprising: an element having an outer surface and an end with male and female coupling members for joining to a substantially identical element to form a complete toy building unit, said element including a shell with an outer surface forming said outer surface of said element, said male coupling member extending from the inner surface of said shell, and said female coupling member comprising a member extending from the inner surface of said shell with a hole therein extending substantially parallel to said male coupling member, and web means joining said male and female coupling members to opposite sides of the inner surface of said shell and joining said male and female coupling members together, whereby to strengthen said element.

References Cited

UNITED STATES PATENTS

2,029,252	1/1936	Pinaud	35—46
2,119,921	6/1938	Levy	46—25

FOREIGN PATENTS

597,762	2/1948	Great Britain.

OTHER REFERENCES

Playthings, July 1964, vol. 62, #7, pp. 101–102.

LOUIS G. MANCENE, Primary Examiner

J. Q. LEVER, JR., Assistant Examiner