Dec. 28, 1954 F. FAHNOE 2,698,022

DISPENSER FOR LIQUID DETERGENTS

Filed Dec. 30, 1948 2 Sheets-Sheet 1

Fig. 1.

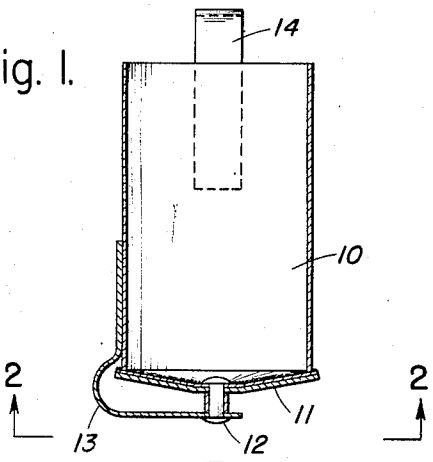

Fig. 3.

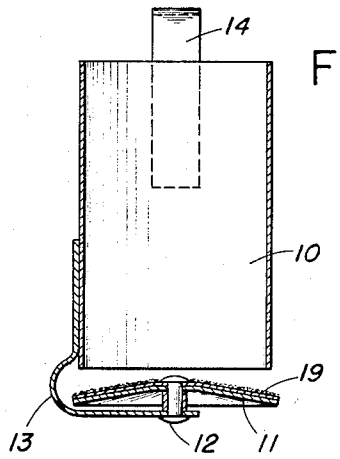

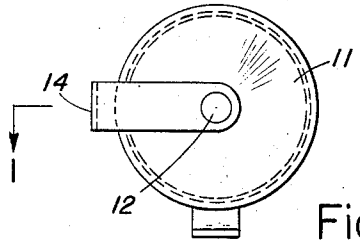

Fig. 2.

Fig. 4.

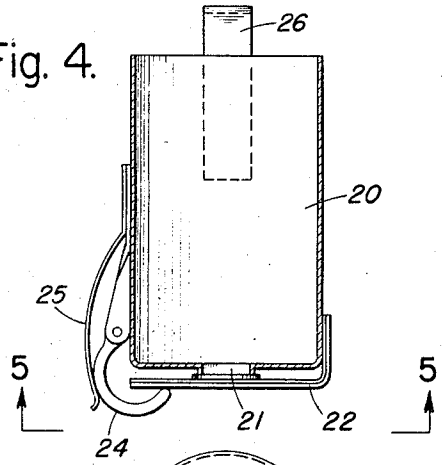

Fig. 6.

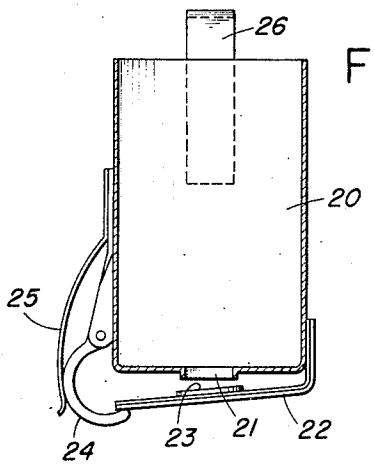

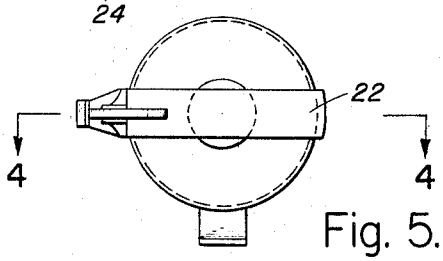

Fig. 5.

INVENTOR
Frederick Fahnoe
BY Lewis McGill
Edward J. Willey
ATTORNEY

DISPENSER FOR LIQUID DETERGENTS

Filed Dec. 30, 1948 2 Sheets-Sheet 2

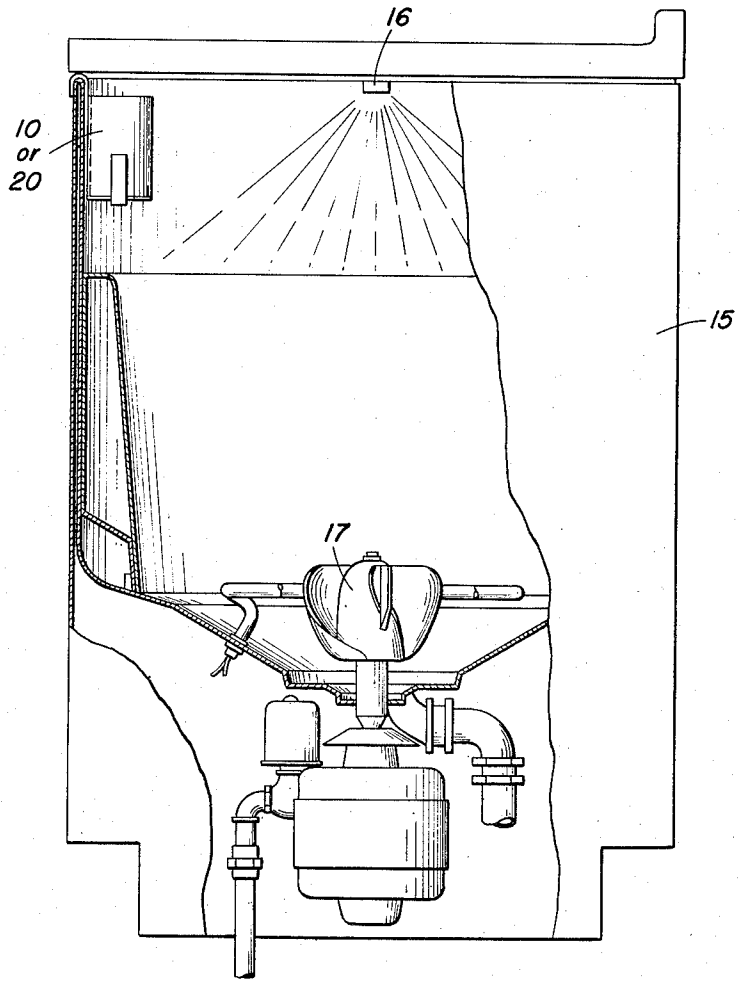

Fig. 7.

INVENTOR
Frederick Fahnoe
BY
Edward J. Willey
ATTORNEY

United States Patent Office

2,698,022

Patented Dec. 28, 1954

1

2,698,022

DISPENSER FOR LIQUID DETERGENTS

Frederick Fahnoe, Easton, Pa., assignor to General Aniline & Film Corporation, New York, N. Y., a corporation of Delaware

Application December 30, 1948, Serial No. 68,365

1 Claim. (Cl. 137—79)

This invention relates to a dispenser for liquid detergents and more particularly to a dispenser for liquid detergents in an automatic dish washing machine and the like.

Automatic dish washing machines as well as automatic clothes washing machines and the like operate on an automatic cycle having, for example, the following sequence of operation after the dishes have been loaded and the machine started in the case of a dish washing machine: Introduction of water in a pre-rinse period with the drain open, closing of the drain and introduction of the water and detergent for the wash period, draining and rinsing with water, and drying. In order to make the machine entirely automatic, some means is required to add a detergent at the beginning of the wash period. Automatic devices for this purpose are known, but they are devised for the introduction of solid detergents and the present invention is directed to a device for the introduction at the proper time of liquid detergent automatically.

It is an object of the present invention to provide a liquid detergent dispenser.

It is a further object of the present invention to provide a liquid detergent dispenser in combination with an automatic washing machine.

It is a further object of the present invention to provide a liquid detergent dispenser in combination with an automatic washing machine adapted to deliver the liquid detergent only during the wash cycle of the machine.

These and other objects are attained by the present invention wherein there is provided a receptacle adapted to hold a liquid detergent, open at the top and having an opening in the bottom and a closure therefor, which closure is operated by a thermal actuated bimetallic element responsive to the temperature of the water in the machine.

The drawings illustrate the preferred embodiments of the invention, but it will be understood that the invention is not limited thereto and that such substitutions and variations as will be obvious to those skilled in the art are included within the invention as defined in the appended claim.

Fig. 1 is a cross-sectional view of the dispenser in closed position.

Fig. 2 is a bottom view of the dispenser shown in Fig. 1.

Fig. 3 is a cross-sectional view of the dispenser of Fig. 1 in an open position.

Fig. 4 is a cross-sectional view of an alternative device in a closed position.

Fig. 5 is a bottom view of the device shown in Fig. 4.

Fig. 6 is a cross-sectional view of the device shown in Fig. 4 in an open position.

Referring to the drawings, it will be seen that the device shown in Figs. 1 to 3 comprises a vertical cylindrical receptacle **10**, open at the upper end as well as the lower end. The lower end is provided with a closure **11** which is a thermal responsive bimetallic element. This bimetallic closure is generally disc-like in shape and adapted to become convex or concave depending upon the temperature to which it is subjected as indicated by the open and closed position of Figs. 1 and 3, respectively. The disc, in effect, acts as a valve seat and has a snap action when a predetermined temperature is reached for opening or closing the receptacle. The disc is held in position by a pivot **12** which is attached by means of arm **13** to the side of the dispenser **10**, whereby it is kept aligned with the receptacle. For attachment to the machine the receptacle is provided with a hook **14**, but it will be understood that alternate attaching means may be used. In addition, the disc **11** may be provided with a sealing and insulating composition **19** adapted to keep the liquid from running out of the receptacle in closed position and from cooling the disk to prevent it from operating.

Referring to the alternative device disclosed in Figs. 4 to 6, there is shown a cylindrical receptacle **20**, open at the upper end and having an opening **21** at the lower end. This lower opening is adapted to be closed by a bimetallic strip **22**, which may be provided with a valve seat **23**. In order to prevent partial closing of the opening in the receptacle, the bimetallic strip **22** is retained in its upper or closed position by means of hook **24** which is actuated by a spring **25**. It will be understood that by adjustment of the spring tension a variation in the delay time or temperature at which the opening of the receptacle takes place may be effected. For attachment to the machine the receptacle is provided with a hook **26**, but it will be understood that alternate attaching means may be used.

In Fig. 7 there is shown one of the known types of automatic dish washing machines **15**, with the dispenser of either Figs. 1 or 4 attached inside the dish washing machine, for example, at the upper edge thereof. The details of the dish washing machine need not be described herein, since the particular arrangement of parts is not essential to the present invention and the machine is illustrated to show the combination with the dispenser. The location, however, of the dispenser is important since for proper operation it should avoid contact with the rinsing water indicated as entering the machine by valve **16** from the top center; only the water used for the washing cycle distributed through agitator **17** should contact the dispenser, if any contact is made at all.

In the operation of the device the dispenser is filled with liquid detergent and placed in the dish washer in a nearly vertical position. The machine is turned on and the initial rinse, while having a tendency to raise the temperature within the machine, does not raise it to its ultimate temperature, so that the bimetallic elements in proper adjustment will not yet be actuated. Introduction of the wash water, and possibly some contact of this wash water with the bimetallic element, raises the temperature sufficiently to actuate the bimetallic elements and permit the introduction of the liquid detergent into the machine. After the dish washing is completed, the cooling of the machine will cause the return of the bimetallic element to the closed position so that the operation may be repeated.

In the device as illustrated the dispenser receptacle is open at the top, but it will be understood that this is not essential and a top closure could be applied. In addition, the receptacle need not be cylindrical and various other shapes could be used. Furthermore, the device has been described as useful with liquid detergents, and it will be understood that this would include solutions of solid detergents, and the device may be used with solid detergents as well, but from the construction thereof it is most effectual with liquid detergents.

I claim:

An automatic liquid detergent dispensing device for use with an automatic washing machine comprising a vertical cylindrical receptacle having an opening at the lower end thereof and a disc-like thermal responsive snap-action bimetallic element which changes its shape from concave to convex and vice-versa when the temperature rises and falls respectively through a predetermined temperature, said element being externally secured in a fixed position just below the lower end of said receptacle and adapted to close and seal said opening below a predetermined temperature and to completely open it at said predetermined temperature by an aforesaid change in shape.

(References on following page)

References Cited in the file of this patent

UNITED STATES PATENTS

Number	Name	Date
1,219,516	Whittelsey	Mar. 20, 1917
1,774,537	Zimmerman	Sept. 2, 1930
2,008,835	Radcliffe	July 23, 1935
2,118,299	Ellis	May 24, 1938

Number	Name	Date
2,145,925	Geisel	Feb. 7, 1939
2,213,147	Parkins	Aug. 27, 1940
2,231,211	Halsey	Feb. 11, 1941
2,271,850	Zinkil	Feb. 3, 1942
2,285,305	Reid	June 2, 1942
2,427,088	Chapman et al.	Sept. 9, 1947
2,516,202	Graham	July 25, 1950