J. E. WARMAN.

PACKAGE TIE.

APPLICATION FILED JUNE 16, 1915.

1,188,026. Patented June 20, 1916.

Fig. 1.

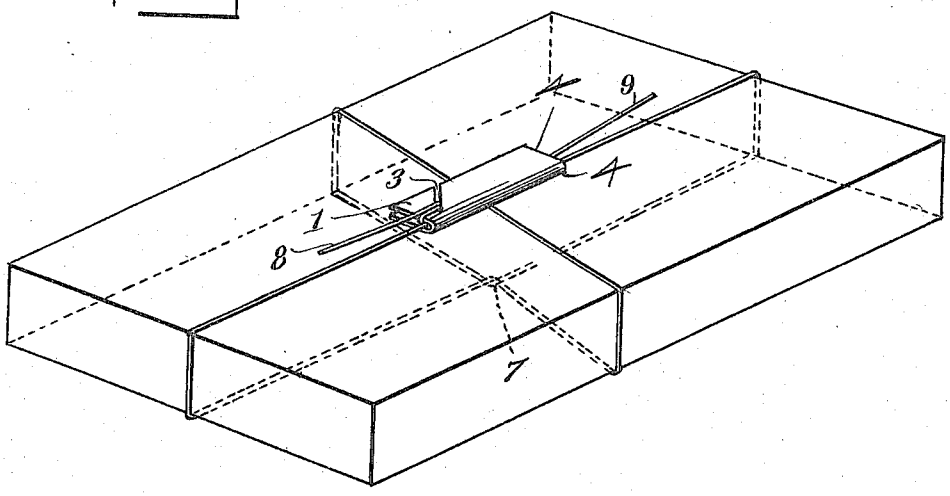

Fig. 2.

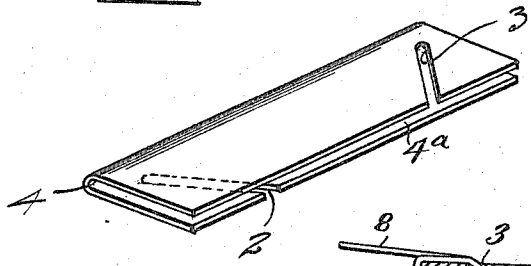

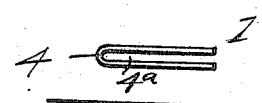

Fig. 3.

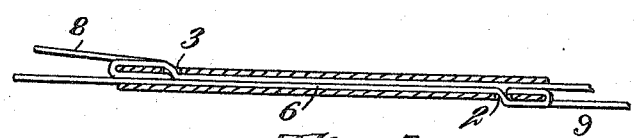

Fig. 5.

Fig. 4.

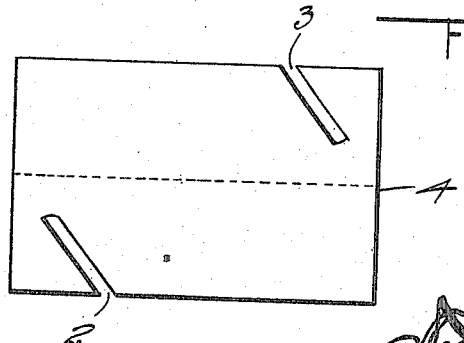

Witnesses

C. R. Beall.

J. W. Garner

Inventor

J. E. Warman

By W. Randolph Jr.

Attorney

THE COLUMBIA PLANOGRAPH CO., WASHINGTON, D. C.

UNITED STATES PATENT OFFICE.

JOHN E. WARMAN, OF RIVERSIDE, CALIFORNIA.

PACKAGE-TIE.

1,188,026. Specification of Letters Patent. Patented June 20, 1916.

Application filed June 16, 1915. Serial No. 34,433.

To all whom it may concern:

Be it known that I, JOHN E. WARMAN, a citizen of the United States, residing at Riverside, in the county of Riverside and State of California, have invented certain new and useful Improvements in Package-Ties; and I do hereby declare the following to be a full, clear, and exact description of the invention, such as will enable others skilled in the art to which it appertains to make and use the same.

This invention is an improved package tie to enable a package to be fastened by a string without the necessity of tying a knot in the string and also enabling a string to be used a number of times, the object of the invention being to provide an improved device of this character which is extremely cheap and simple and by means of which a package may be readily fastened.

The invention consists in the construction, combination and arrangement of devices hereinafter described and claimed.

In the accompanying drawings: Figure 1 is a perspective view of a package tie, constructed in accordance with my invention, showing the same in use, in connection with a string, on a package. Fig. 2 is a detail perspective view on a larger scale, of the tie. Fig. 3 is an end elevation of the same. Fig. 4 is a plan of the tie before it is bent. Fig. 5 is a longitudinal sectional view of the tie, showing the string in locked position.

My improved package tie 1 is made of an oblong rectangular piece of sheet metal or other similar material, of suitable size and is provided in opposite sides, near its opposite ends with slots 2—3 which are preferably at an angle of about 45° with reference to the sides of the device. The plate is bent longitudinally in the center, at 4 so that the tie is formed with sides and with a longitudinal passage 4^a between them extending from end to end of the tie and open at one side thereof.

In the use of my improved tie, a string 6 is first passed in opposite directions around a package and crossed at 7 and its end portions are then passed transversely around the package. The tie is then placed on one side of the package, preferably at or near the center. The ends 8 and 9 of the string 6 are then passed through the longitudinal passage 4^a, the end 8 after passing through the longitudinal passage 4^a is passed through the diagonal slot 3, extended over the end of the tie and then back through the longitudinal passage and is finally passed through the diagonal slot 3, the other end 9 after passing through the longitudinal passage 4^a is drawn tight and is passed through the diagonal slot 2 and extends over the end of the tie and back through the longitudinal passage 4^a and finally through the diagonal slot 2 so that the string is securely locked. By grasping the ends of the string and removing them from the slots the package can be readily released. The string and the tie can be used indefinitely a number of times and on various packages.

Having thus described my invention, I claim:—

1. A package tie of the class described comprising a bent plate formed with a pair of sides and with a longitudinal passage between the sides, extending from end to end of the plate and also to one side thereof, the walls or sides of the plate being provided with slots near opposite ends.

2. A package tie of the class described comprising a bent plate formed with a pair of sides and with a longitudinal passage between the sides, extending from end to end of the plate and also to one side thereof, the walls or sides of the plate being provided with inclined slots near opposite ends.

In testimony whereof I affix my signature in presence of two witnesses.

JOHN E. WARMAN.

Witnesses:
O. C. COFER,
W. H. FERTIG.

Copies of this patent may be obtained for five cents each, by addressing the "Commissioner of Patents. Washington, D. C."