(No Model.)

J. T. RICHARDSON.

RAILWAY SWITCH STAND.

No. 456,125. Patented July 14, 1891.

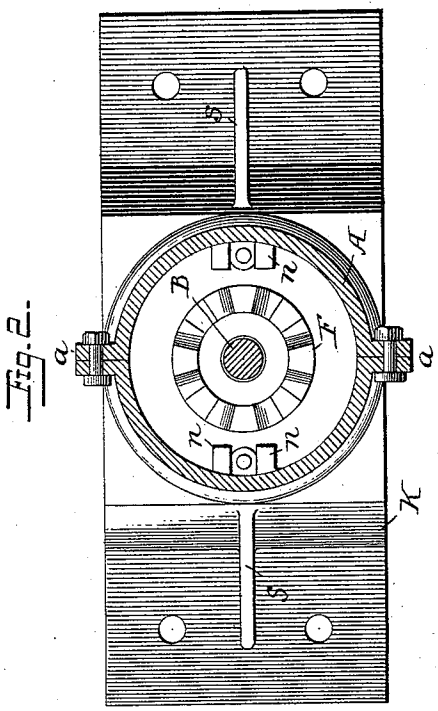

Fig. 2.

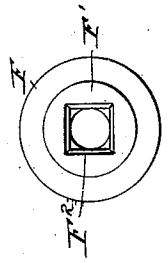

Fig. 4.

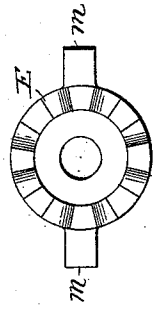

Fig. 3.

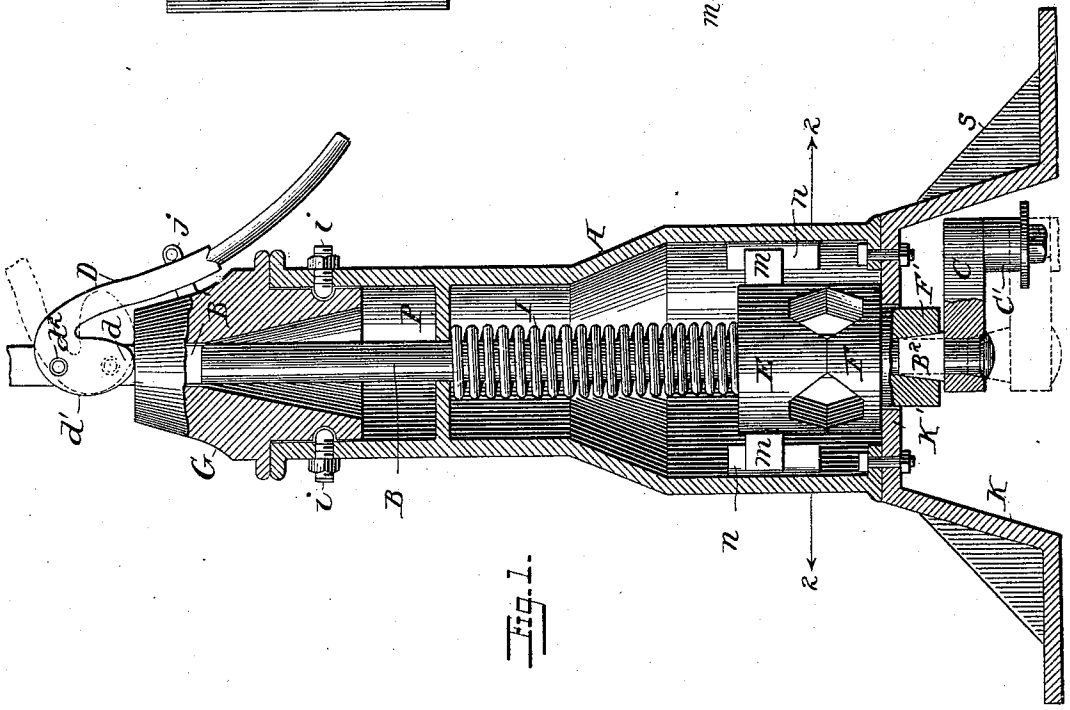

Fig. 1.

WITNESSES

Jno. J. Hinkel

J. A. Watson

INVENTOR

John T. Richardson

by Foster & Freeman

Attorneys

THE NORRIS PETERS CO., PHOTO-LITHO., WASHINGTON, D. C.

UNITED STATES PATENT OFFICE.

JOHN T. RICHARDSON, OF HARRISBURG, ASSIGNOR OF ONE-HALF TO ALEXANDER H. EGE, OF MECHANICSBURG, PENNSYLVANIA.

RAILWAY-SWITCH STAND.

SPECIFICATION forming part of Letters Patent No. 456,125, dated July 14, 1891.

Application filed November 4, 1890. Serial No. 370,296. (No model.)

To all whom it may concern:

Be it known that I, JOHN T. RICHARDSON, a citizen of the United States, residing at Harrisburg, in the county of Dauphin and State of Pennsylvania, have invented certain new and useful Improvements in Railway-Switch Stands, of which the following is a specification.

My invention relates to that class of switch-stands which may be either operated by hand or automatically by the pressure of passing wheels upon the switch-rails when the switch is not properly set for a car going in the direction in which the switch trails; and it consists in an improved construction which will be fully described hereinafter, reference being had to the accompanying drawings, in which—

Figure 1 is a sectional elevation of the switch-stand complete. Fig. 2 is a sectional plan view taken on the line 2 2 of Fig. 1, the upper clutch-section being removed. Fig. 3 is a bottom plan view of the upper or sliding sleeve; and Fig. 4 is a bottom plan view of the lower or revoluble sleeve.

My improved switch-stand is inclosed in a casing A, which is preferably made in two sections provided with perforated lugs *a*, through which bolts are passed and mounted upon a base K and secured thereto by suitable fastenings. The casing A is preferably circular in cross-section, and on its upper end is mounted a revoluble cap G, having a central polygonal perforation adapted to receive a similarly-formed portion B′ of a spindle B, which will be hereinafter described.

I will first describe the invention as adapted to be operated automatically by the side pressure of the wheel-flanges upon a passing train, and afterward point out the construction which permits the stand being operated and the switch thrown by hand.

Passing vertically through the center of the frame A is a spindle B, which may be extended upward, if desired, to carry a target, and which extends below the upper portion of a base K, and carries on its lower end the usual crank C, which communicates motion to the switch-rod C′. The spindle B is preferably round throughout the greater portion of its length, but is formed of square or other polygonal section in the portion B′, which passes through the cap G, and the portion B^2, which enters the lower or revoluble toothed sleeve F, when the spindle is elevated to the position in which the stand operates automatically. The lower sleeve F of the yielding clutch is formed upon its upper surface with preferably four teeth having inclined faces, and upon its lower side it is provided with a shank F′, having a polygonal perforation F^2, corresponding in shape and adapted to receive the portion B^2 of the spindle. The shank F′ passes through a circular opening in the floor K′ of the base K, while the extended body portion of the sleeve, which is preferably round, rests upon said floor. The upper section of the clutch is in the form of a cylindrical sleeve E, having a central perforation through which the spindle B passes, and upon its lower side a series of teeth having inclined faces corresponding to the teeth upon the section F and adapted to fit between when the clutch E is lowered. The section E is permitted to slide freely upon the spindle B and is prevented from turning therewith by means of lugs *m*, cast upon or attached to the sleeve, which slide between vertical guides *n n*, formed upon the casing. The section E is constantly pressed against the section F by means of a yielding spring, which I preferably make in the form of a spiral, as shown, the upper end of the spring resting upon a fixed abutment P, which is preferably cast integral with the frame A. The spindle B is arranged to be raised and lowered to engage and disengage the polygonal portion B^2 with or from the clutch-section F. This movement of the spindle may be attained in various ways. As shown, a lever D is pivoted to the spindle at d^2 and provided with a cam-shaped portion *d*, having a surface eccentric to the pivot. When the lever D is in a lowered position, as shown in Fig. 1, the portion *d* of the cam rests upon the cap G, and the spindle B is thereby held in its elevated position. The lever may be locked in this position by means of a staple *j*, attached to the cap G and passing through a slot in the lever in conjunction with a padlock or suitable pin or bolt. When, however, it is desired to lower the spindle to disengage

the polygonal portion B^2 from the clutch F, the lever D is raised until the portion d' of the cam rests upon the cap, as shown in dotted lines.

Presuming that the spindle B is locked in its raised position, as shown in Fig. 1, and that the switch is not properly set for a train coming in the direction in which the switch trails, the operation of the stand would be as follows: The teeth of the upper clutch-section, which normally are held between the teeth of the lower section by means of the springs I, tend to lock the switch in whichever position it may be placed with a certain degree of positiveness; but when a strong lateral pressure is brought to bear upon the switch-rails the strain is transmitted through the switch-rod C', and the crank C and spindle B are rotated, the inclines upon the clutch-teeth causing the upper section to rise against the pressure of the spring and permitting the lower section to revolve. In Fig. 1 I have shown the clutch in the position which the sections take when the switch is partly thrown, as above described. The teeth are so placed that they will fully interlock when the switch is in its open or closed position. Should the train passing over the switch fail to fully open it, the spring I, acting upon the clutch, will cause the two sections to come together, the inclines upon the teeth acting to turn the lower section F, and thereby complete the opening or closing of the switch. When the switch-stand operates automatically, as above described, the lever D and cap G both turn with the spindle, the cap G being swiveled to the casing so as to offer no resistance. When it is desired to turn the switch by hand, the lever D is raised, permitting the spindle B, by virtue of gravity, to drop until the face d' of the cam rests upon the cap. This movement of the spindle is sufficient to disengage the polygonal portion B^2 from the sleeve F, which permits the spindle to be turned freely and independently of the action of the clutch and spring I. When the switch is properly adjusted, the handle D should be again locked in its depressed position, in order to bring the yielding clutch into action to hold the switch in the position in which it is placed.

Without limiting myself to the precise construction and arrangement of parts shown and described, I claim—

1. The combination, in a switch-stand, of the casing, the longitudinally movable and revoluble spindle, the cap, the lever pivoted to the spindle and having the cam portion arranged to bear upon the cap, and the yielding clutch, said spindle passing through the sections of said clutch and having its lower end adapted to engage the lower clutch-section when the spindle is raised, substantially as described.

2. The combination, in a switch-stand, of the casing, the longitudinally-movable spindle having the polygonal portion B^2, the yielding clutch comprising the revoluble section F, having the socket F^2, the reciprocating non-rotary section E, and the spring I, substantially as described.

3. The combination, in a switch-stand, of the casing, the cap, the base, the revoluble clutch-section F, having shank F' journaled in the base, the non-rotary sliding section E, and the spindle B, said spindle being longitudinally movable through the clutch-sections and the cap, substantially as described.

4. The combination, in a switch-stand, of the casing having the guides n and abutment P integral therewith, the base, the revoluble clutch-section journaled in the base and provided with a polygonal socket, the sliding non-rotary clutch-section having lugs m m, the spindle, the spring interposed between the sliding clutch-section and the abutment P, and the spindle having the portion B^2 at its lower end adapted to the socket of the lower clutch-section, substantially as described.

In testimony whereof I have signed my name to this specification in the presence of two subscribing witnesses.

JOHN T. RICHARDSON.

Witnesses:
H. H. MERCER,
E. D. LOMON.