Dec. 15, 1959 H. LEHMANN 2,916,861

DEVICE AND METHOD FOR CLOSING AND SEALING CONTAINERS

Filed March 26, 1952

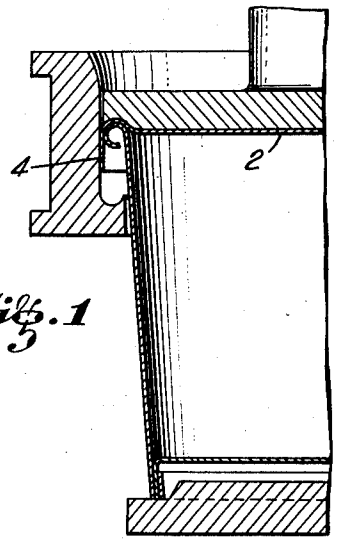

Fig. 1

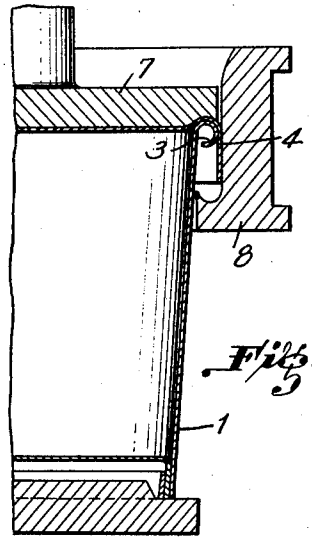

Fig. 3

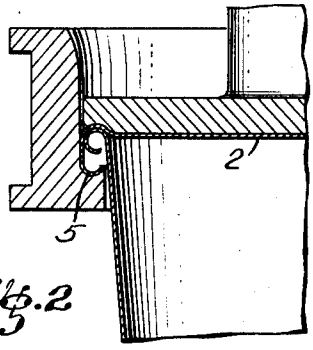

Fig. 2

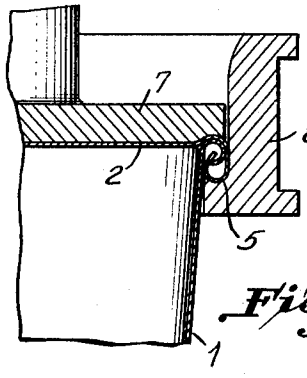

Fig. 4

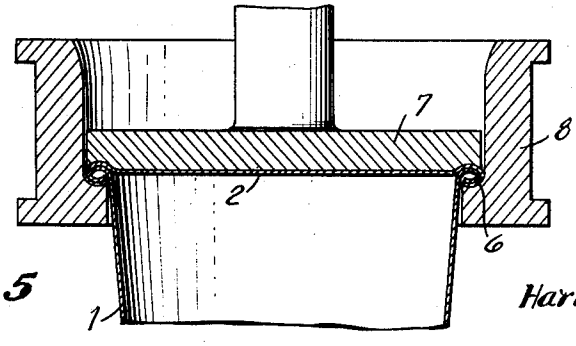

Fig. 5

INVENTOR

Harry Lehmann

BY

ATTORNEY

United States Patent Office 2,916,861
Patented Dec. 15, 1959

2,916,861

DEVICE AND METHOD FOR CLOSING AND SEALING CONTAINERS

Harry Lehmann, Puchheim, near Munich, Germany

Application March 26, 1952, Serial No. 278,571

3 Claims. (Cl. 53—42)

This invention relates to a device for closing and sealing containers formed of sheet fibrous material, such as paper and the like, and more particularly to a device for closing and sealing containers of said type that are provided with a beaded upper edge, and to a method of closing and sealing such containers.

Various closures for containers and like packing material are known. Thus, for instance, the bead of a container is united with a top part fastened to the edge of the container whereby said top part is folded together only when transporting said container. Furthermore it is known to provide beaded containers below the bead with an externally extending groove into which a cardboard disk is pressed, said disk, thus, serving as a closure. Screw-threaded closures or clamping caps have also been used for closing such containers. None of said closures, however, fully satisfies the above stated requirements. It is also known to press a drawn bottom into a container casing and then to unite by beading the edge of said bottom with said casing; but even such a closure is not liquid-tight because, on beading, bottom and casing and their layering are dislocated with respect to each other.

It is one object of this invention to provide a closure for containers formed of sheet fibrous material, such as paper and the like, which is liquid-tight and sufficiently resistant to withstand the strains imposed thereon on shipping and transporting the filled container without causing said closure to become leaky, thereby avoiding the disadvantages of the known closures.

Another object of this invention resides in the provision of a novel means and method for closing and sealing beaded containers formed of sheet fibrous material, such as paper and the like, said method being highly efficient in operation, yet relatively simple and economical to perform and being especially adaptable for use at the point where the containers are to be filled.

A further object of this invention is to provide a device for carrying out said process of tightly closing and sealing beaded containers, thereby rendering said closure not only liquid-tight but also so stable and resistant that it will satisfy any requirement.

Other objects of this invention will become apparent from the specification and the examples given therein.

According to this invention a drawn cover is placed over the bead of the container casing, the edge of said cover extending somewhat over the bead of said casing. Said cover edge is beaded by means of a beading tool which moves towards the bead of the container casing. Beading of the cover edge is continued until the formed bead rests upon the existing bead of the container casing. Both beads are then jointly forced, by a further movement of the beading tool, against a die which supports the cover and are firmly pressed together. The height of the cover flange and the diameter of the curvature of the bead are preferably proportioned in such a manner that the edge of the cover, after beading, is situated inside the container bead.

The attached drawings illustrate a device for carrying out the process of this invention whereby the curvatures of the beads are somewhat enlarged in order to more clearly demonstrate the procedure.

Fig. 1 and Fig. 3 represent a cross section through a beaded container and through the drawn cover placed on said container, Fig. 1 representing a cover with a low flange and Fig. 3 a cover with a high flange.

Fig. 2 and Fig. 4 show the cover flanges beaded to such an extent that the formed bead almost contacts the bead of the container casing.

Fig. 5 shows both beads in almost fully compressed state.

The device for making a closure according to this invention consists, in principle, of a heated beading tool 8 provided with an inner beading recess which also serves to compress the beads, and counter-die 7 which serves as prop on beading the edge 4 of cover 2 and as support on compressing the beads 3 and 5. The container to be closed and sealed is placed with the drawn cover 2 put thereon, between said beading tool 8 and said die 7. Die 7 holding cover 2 in its position, presses said cover 2 gently upon container casing 1 which is provided with bead 3. The heated beading tool 8 moves towards bead 3 of container casing 1. Thereby flange 4 of cover 2 (Fig. 1 and Fig. 3) is beaded into shape 5 until it contacts bead 3 (Fig. 2 and Fig. 4).

Thereby beading tool 8 proceeds continuously in its direction of movement, thus, forcing both beads against die 7 and compressing the same. Fig. 5 shows the two beads in almost fully compressed state 6. Flange 4 of cover 2 is preferably of such a height that, in the beaded state, it projects into the inside of the existing bead 3 of the container casing (Fig. 4). Both beads are firmly pressed together in this position. This has the effect that the cutting edges are unable to swell under the influence of moisture reaching the container from the outside. The diameter of the curvature of the two beads is selected in accordance with the wall thickness of container casing 1 and cover 2 in such a manner that it is possible to firmly press together both beads at the narrowest position between beading tool 8 and die 7. When using containers coated with paraffin, both beads are fused together by the pressure and the heat of beading tool 8. When using impregnated containers it is also possible to achieve fusion of the compressed beads under the influence of heat and pressure when using thermoplastic synthetic resins.

On closing and sealing by pressing the beads together, the container and, likewise, the container casing are not subjected to any stress or strain because the pressure for compressing is intercepted and absorbed by die 7. Therefore, container casing 1 and cover 2 can be made very light and thin depending upon the intended use of said container.

By the process of this invention, a container closure is obtained which is absolutely liquid-tight. The edge of the container, produced under the influence of heat and pressure, considerably reinforces and strengthens the same and renders it substantially indifferent towards the stresses and strains occurring when shipping and transporting such filled containers.

Containers closed and sealed according to the method and with the device of this invention, may safely be used for shipping and transporting milk, cream, honey, syrup, marmalade, sauces, meat, fish, and fruit salads and others more. They may also serve for air-tightly packing aromatic goods, such as coffee, cocoa, and spices. They are especially suitable for transporting, shipping, and storing of hygroscopic materials, such as dried milk products, preparations containing glucose and others.

Of course, it is understood that the device according to this invention is provided with means for supporting

its principal parts, namely the die 7 and the beading tool 8, means for moving said beading tool 8 and die 7 in relation to each other, means for heating beading tool 8, such as a heating unit associated with said beading tool, means for supplying electric current to said heating unit.

As stated above, the containers may be formed of any sheet fibrous material, such as paper and synthetic resins. Plasticized paper or fiber, vinyl acetate, cellulose acetate, cellulose nitrate or other thermoplastic material may also be used. Especially suitable are containers formed from paper combined with foils of synthetic resins or provided with a coating thereof. Of course, any other similar material may be used likewise.

I claim:

1. A device for closing and sealing containers made from fibrous sheet material, said containers tapering from top to bottom and being provided with beaded edges, said device comprising a counter-die serving as prop on beading the downwardly extending flange of a cover placed over said container, and as support on pressing together the resulting bead of said cover with the bead of said container, said counter-die having a substantially flat horizontal lower surface, and a beading tool movable in upward direction towards said counter-die, said beading tool having a rounded upper opening part for receiving and guiding the cover flange, a cylindrical guiding part for guiding said cover flange, and a rounded beading recess for forming a bead of said cover flange over and into the beaded edge of said container and for firmly compressing the beads of said cover and container, the lower inner opening of said beading tool having a larger diameter than the outside diameter of the container casing at the place of beading and compressing

the beads, the cylindrical guiding part of said beading tool having a height corresponding at least to the height of the cover flange, and the diameter of said beading recess being such that its inner edge does not contact the container wall at the starting place of the beaded edge of said container.

2. A method of closing and sealing containers of fibrous sheet material which comprises providing a container tapering from top to bottom and having an external bead along the upper edge thereof, placing a substantially flat cover thereon, said cover having a downwardly extending flange, inserting said container and cover in a hollow beading tool with said flange in contact with the inner guiding walls of said tool and said container being out of contact with said tool, the latter having an internal shoulder at its lower end, placing a counter-die on said cover, then moving said tool towards said die to cause said flange to first curl inwardly on said shoulder and then contact said bead, and finally cause said flange and bead to intercurl, whereby only the bead of said container is subjected to the pressure of said tool and die, and pressing said bead and flange together.

3. A method according to claim 2, in which said die is stationary and said tool moves toward said die.

References Cited in the file of this patent

UNITED STATES PATENTS

180,356	Marquet	July 25, 1876
2,120,901	Moore	June 14, 1938

FOREIGN PATENTS

793,770	France	Nov. 23, 1935