United States Patent [19]

Rothchild

[11] **3,902,656**

[45] **Sept. 2, 1975**

[54] **SLIDE CALCULATOR CONSTRUCTION**

[75] Inventor: **Alan J. Rothchild,** East Northport, N.Y.

[73] Assignee: **Rothchild Printing Company, Inc.,** Elmhurst, N.Y.

[22] Filed: **Dec. 6, 1973**

[21] Appl. No.: **422,372**

[52] **U.S. Cl.** ..... **229/75;** 206/459; 229/68 R; 229/71; 235/70 R; 235/89

[51] **Int. Cl.** **B65d 27/04**

[58] **Field of Search** ..... 229/68 R, 71, 75, 85, 81; 235/70 R, 89; 206/459

[56] **References Cited**

UNITED STATES PATENTS

697,971	4/1902	Bonnaffon	229/75
3,025,767	3/1962	Ruffalo	235/70 R
3,181,774	5/1965	Littman	229/71 X
3,441,208	4/1969	Goldstein	235/70 R

Primary Examiner—William I. Price
Assistant Examiner—Stephen P. Garbe
Attorney, Agent, or Firm—Blum, Moscovitz, Friedman & Kaplan

[57] **ABSTRACT**

An article formed of a single blank of cardboard and adapted to be used as a slide calculator is provided. A single blank including several panels having removable tabs formed thereon, certain of the panels being folded together to define at least one tubular envelope and a panel being folded therein so as to be disposed in said envelope is adapted to become a slide calculator upon the removal of such tabs. Such a slide calculator is suitable for achieving many diverse calculations.

7 Claims, 11 Drawing Figures

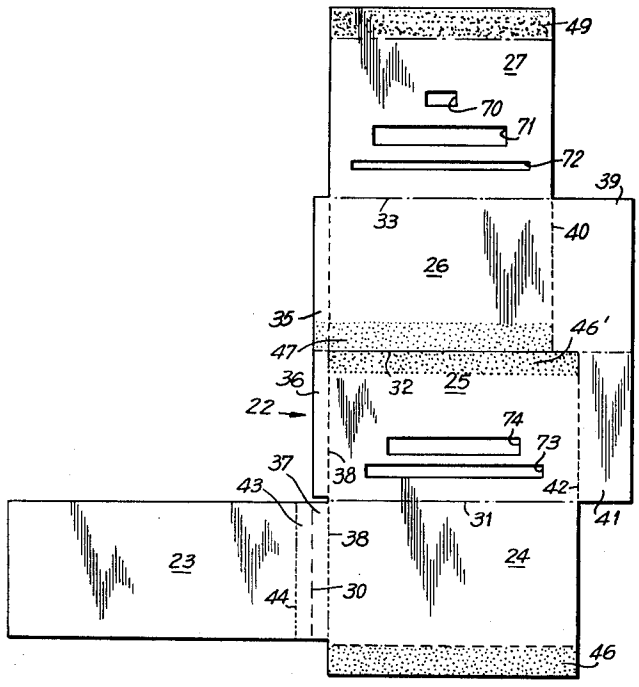

FIG. 1

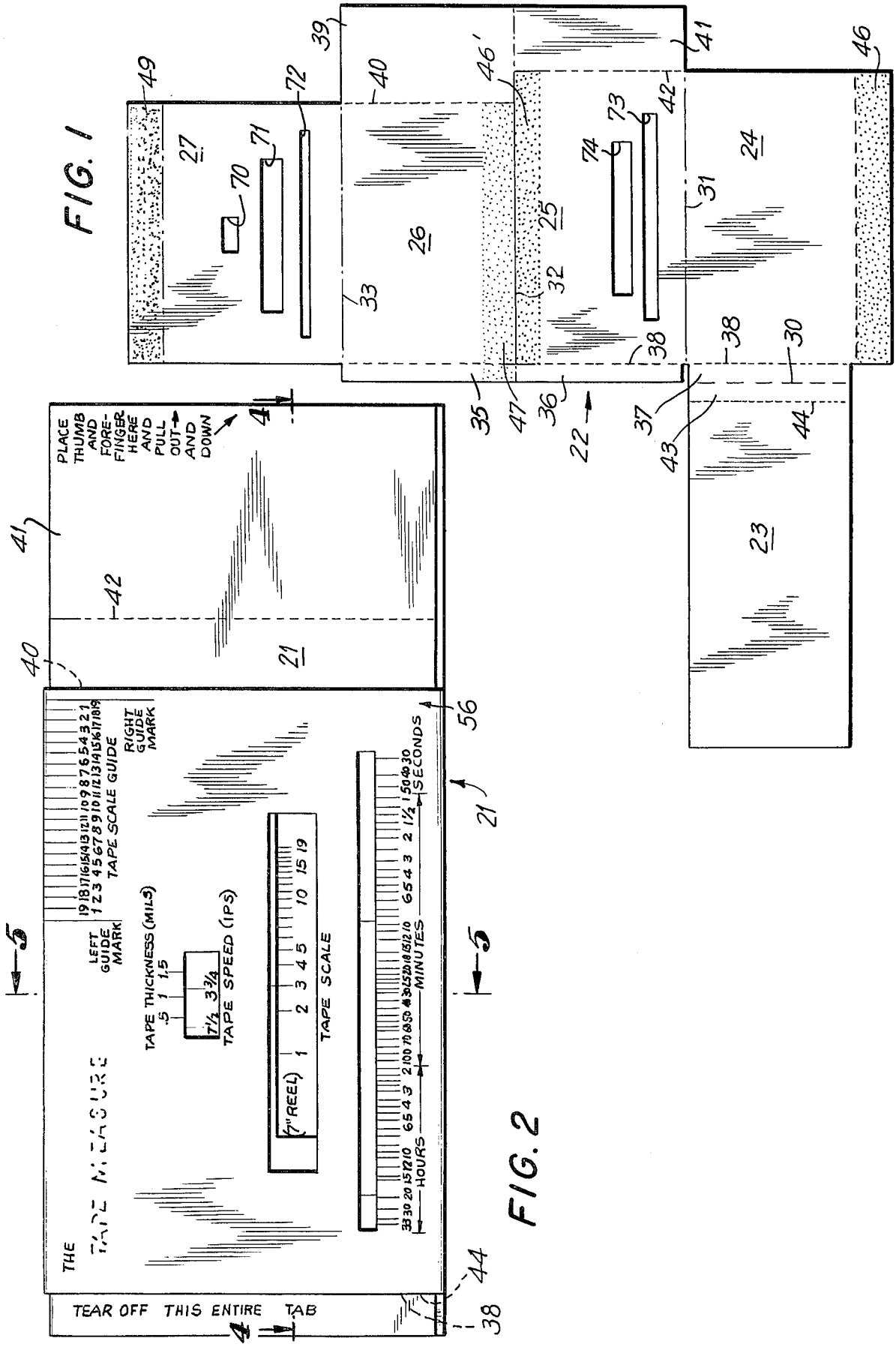
PLACE THUMB AND FORE-FINGER HERE AND PULL OUT AND DOWN
TAPE SCALE GUIDE
LEFT GUIDE MARK
RIGHT GUIDE MARK
TAPE THICKNESS (MILS)
TAPE SPEED (IPS)
TAPE SCALE
7" REEL
HOURS
MINUTES
SECONDS
TEAR OFF THIS ENTIRE TAB

FIG. 2

FIG. 5

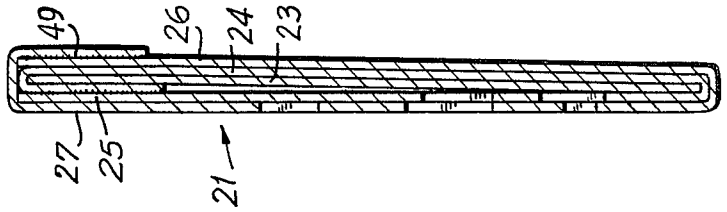

FIG. 3

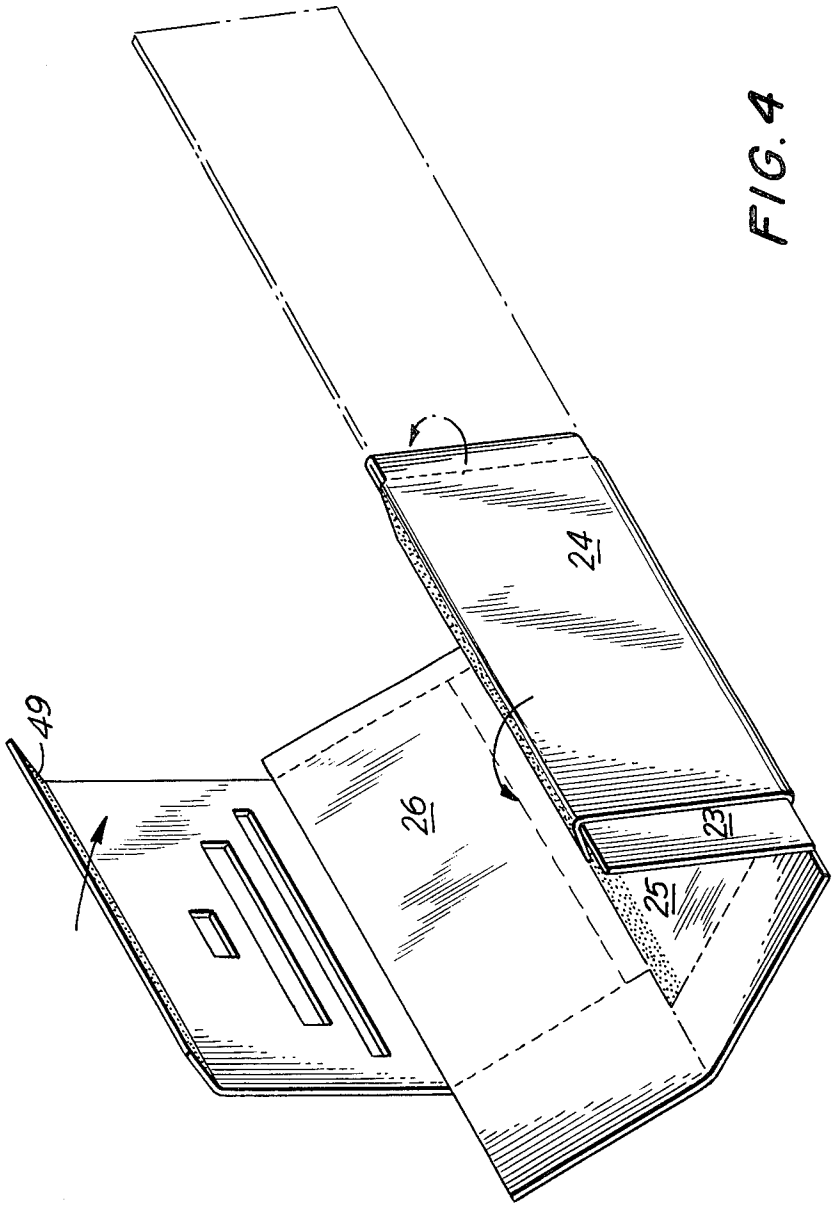

FIG. 4

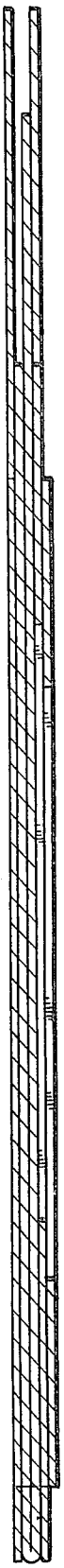

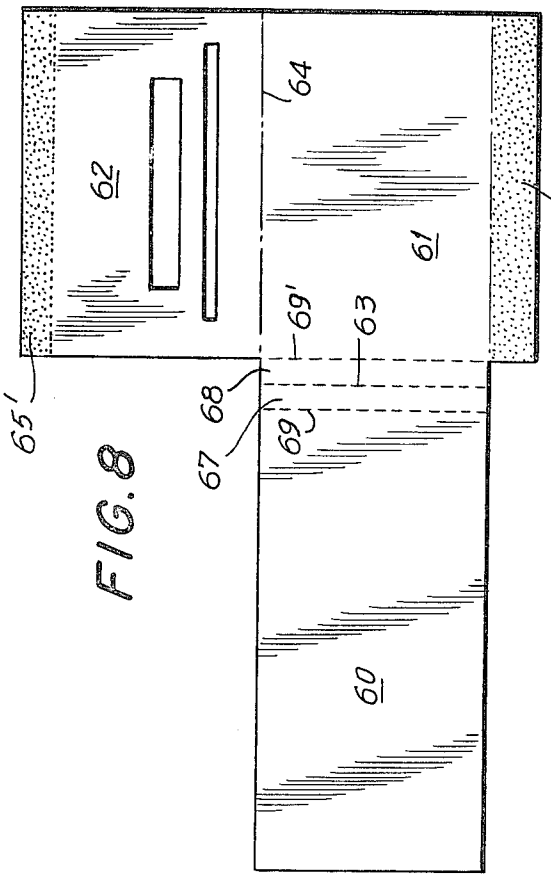

FIG. 8

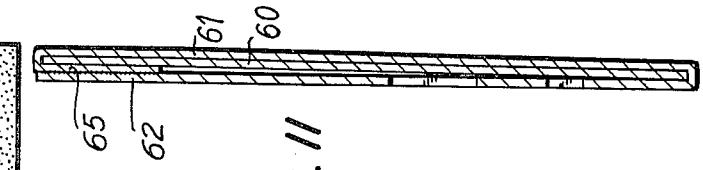

FIG. 11

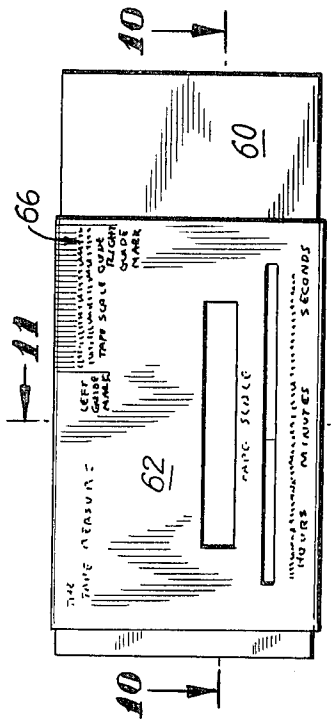

FIG. 9

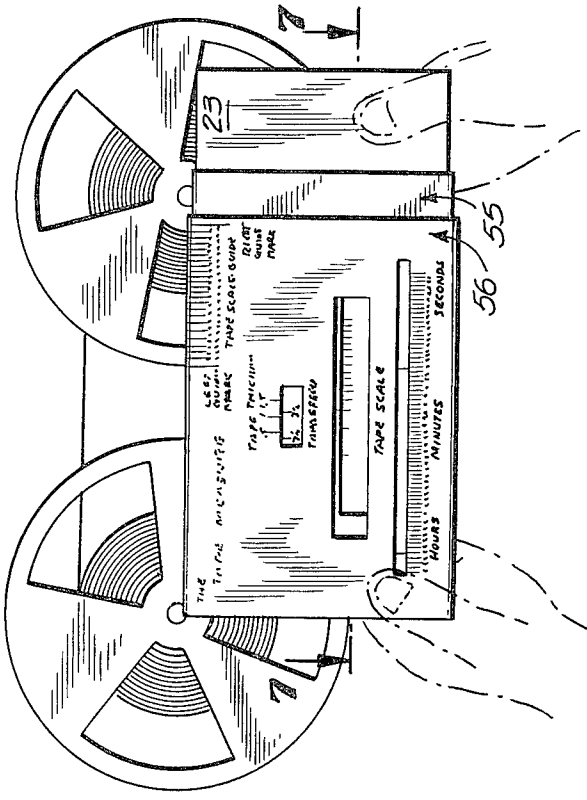

FIG. 6

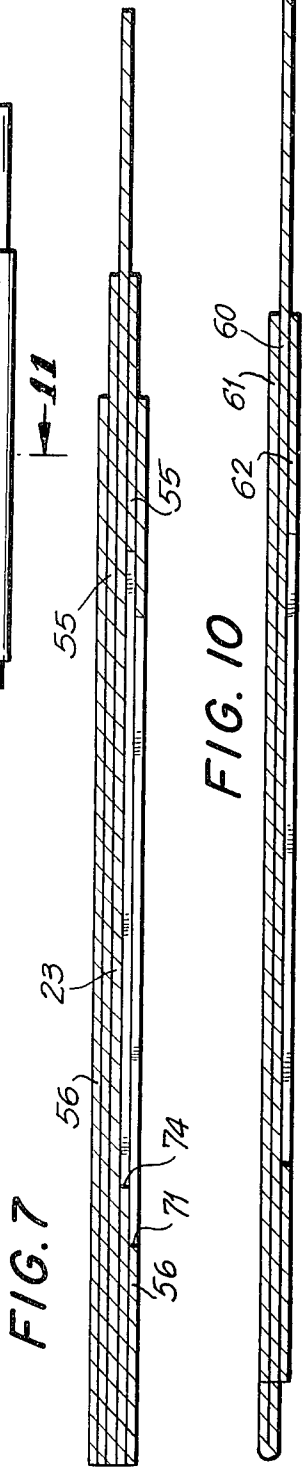

FIG. 10

FIG. 7

SLIDE CALCULATOR CONSTRUCTION

BACKGROUND OF THE INVENTION

This invention relates generally to a slide calculator of improved construction and sophistication while providing for simplicity of use.

SUMMARY OF THE INVENTION

Generally speaking, in accordance with the invention, a disposable slide calculator made from a single blank of cardboard is provided. The single piece of cardboard is formed of at least three rectangular panels oriented in a predetermined pattern, the first panel foldably connected along a widthwise edge to a second panel and the second panel foldably connected at a lengthwise edge to a third panel, the first panel being folded along said common widthwise edge to be disposed in a tubular envelope formed by the folding and joining of the second and third panels. The first and second panels include tabs formed by perforating same whereby the removal of said tabs renders the first panel slidable within the tubular envelope.

The single blank of cardboard can further include a fourth panel foldably connected along a lengthwise edge to said third panel and a fifth panel foldably connected along its lengthwise edge to the other lengthwise edge of said fourth panel, said fourth and fifth panels being joined together to form a second tubular envelope about said first envelope. In such an embodiment the third and fourth panels include tabs the removal of which effects a sliding of said first tubular envelope in said second tubular envelope.

Accordingly, it is an object of this invention to provide an improved slide calculator construction formed from a single member.

Another object of this invention is to provide an improved slidable calculator which can perform sophisticated mathematical calculations.

Still other objects and advantages of the invention will in part be obvious and will in part be apparent from the specification.

The invention accordingly comprises an article of manufacture possessing the features, properties, and the relation of elements which will be exemplified in the article hereinafter described, and the scope of the invention will be indicated in the claims.

BRIEF DESCRIPTION OF THE DRAWINGS

For a fuller understanding of the invention, reference is had to the following description taken in connection with the accompanying drawings in which:

FIG. 1 is a plan view of a slide calculator blank constructed in accordance with a preferred embodiment of the instant invention;

FIG. 2 is a plan view of the slide calculator constructed in accordance with the preferred embodiment of the instant invention;

FIG. 3 is a perspective view of the assembly of the slide calculator illustrated in FIG. 2;

FIG. 4 is a sectional view taken along line 4—4 of FIG. 2;

FIG. 5 is a sectional view taken along line 5—5 of FIG. 2;

FIG. 6 is an elevational view of the calculator of FIG. 2 in operation;

FIG. 7 is a sectional view taken along line 7—7 of FIG. 6;

FIG. 8 is a plan view of a slide calculator blank constructed in accordance with an alternative embodiment of the instant invention;

FIG. 9 is an elevational view of a slide calculator assembled from the blank of FIG. 8;

FIG. 10 is a sectional view taken along line 10—10 of FIG. 9; and

FIG. 11 is a sectional view taken along line 11—11 of FIG. 9.

DESCRIPTION OF THE PREFERRED EMBODIMENT

Referring now to FIGS. 1 through 5, a slide calculator construction, indicated generally at 21, is formed from a single blank of cardboard 22 having 5 rectangular panels 23 through 27 foldably connected together. Panel 23 is folded into panel 24 along fold line 30. Panel 24 includes a securing tab 46 which is folded over panel 23 and is then folded along line 31 into panel 25 and joined to same at securing portion 46' by securing tab 46 by means of adhesive applied to the reverse side thereof to form a tubular envelope 55. Panel 26 includes a securing portion 47 located on the reverse side of the depicted panel portion and is folded along line 32 about tubular envelope 55 along with panel 27 which is further folded along line 33 to form an outer tubular envelope 56 by joining securing tab 49 of panel 27 to securing portion 47 of panel 39. Securing tab 49, and securing portion 47 include an adhesive substance such as glue to allow the panels to be permanently secured together. Panels 24, 25, 26 include tabular portions 37, 36 and 35 respectively which are formed by perforating said panels along line 38. Similarly, tabular portion 39 of panel 26 is defined by perforation line 40, tabular portion 41 of panel 25 by perforation line 42 and tabular portion 43 of panel 23 by perforation line 44. Finally, panels 25 and 27 define openings 70 through 74 to provide for viewing of the sliding elements of the calculator.

The surfaces of panels 23, 25, 27 which face away from the direction of folding contain indicia which renders such a construction usable as a slide calculator. A slide calculator for measuring the amount of time left on a reel of recording tape is indicated in FIG. 2, the invention not being limited to such a calculator. Thus, a simply packaged cardboard calculator construction is provided which is hereinafter explained becomes operable by a simple tearing operation.

When use of such calculator is desired, it is necessary to remove tabular portions 41 and 39 by tearing same along perforated lines 40 and 42. Similarly, tabular portions 35, 36, 37 and 43 are easily removed by tearing the same along lines 38 and 44 to thus render the calculator elements slidable with respect to each other. As depicted in FIG. 6, panel 23 is slidably contained in inner tubular envelope 55 and tubular envelope 55 is slidably contained in tubular envelope 56 to allow a double sliding scale calculator.

As hereinabove described, a single calculator 21 for measuring the amount of recording time remaining on a reel of tape is depicted. By sliding first tubular envelope 55 which includes a scale indicating tape speed into registry with a tape thickness scale on second tubular envelope 56, and then bringing the value of the tape scale on panel 23 into registry with a line indicated on first envelope 55, a line on panel 23 will be in registry with a time scale indicating hours, minutes and seconds

on outer envelope **56**, the position of the line with respect to the time scale indicating the time remaining on the tape reel.

Referring now to FIGS. **8** through **11**, an alternative slide calculator construction formed of a single blank piece of cardboard and having three panels **60**, **61** and **62** is depicted. Panel **60** is folded along line **63** into contact with panel **61**. Securing tab **65** having adhesive on the reverse side thereof as depicted in FIG. **8** is folded over panel **60**. Panel **62** is folded along line **64** bringing securing portion **65'** in contact with securing tab **65** to form a tubular envelope **66**. Panels **60** and **61** include tabular portions **67** and **68** formed by perforating lines **69** and **69'** respectively, removal of the tabular portions from said calculator construction causing panel **60** to be slidable within tubular envelope **66**. Openings are defined in panel **62** and indicia can be included thereon so that envelope **66** and slidable panel **60** act as a slide calculator. One such use would be as a slide rule.

While the term "cardboard" has been used throughout as a simple means of description, it is to be understood that the calculator can be fabricated of any suitable material.

It will thus be seen that the objects set forth above, among those made apparent from the preceding description, are efficiently attained and, since certain changes may be made in the above article without departing from the spirit and scope of the invention, it is intended that all matter contained in the above description and shown in the accompanying drawings shall be interpreted as illustrative and not in a limiting sense.

It is also to be understood that the following claims are intended to cover all of the generic and specific features of the invention herein described, and all statements of the scope of the invention which, as a matter of language, might be said to fall therebetween.

What is claimed is:

1. A slide calculator comprised of a single blank of cardboard and having at least three rectangular panels connected together in a predetermined pattern, a first panel connected along a widthwise edge to a second panel said second panel connected at a lengthwise edge to a third panel, said second panel having a lengthwise dimension substantially equal to said third panel and said first panel having a longer lengthwise dimension than said second and third panels and being folded along a widthwise edge and being partially disposed in a tubular envelope formed by the folding and joining together of said second and third panels, said first and second panels including perforated lines for defining tabs on said panels whereby the removal of said tabs renders such first panel slidable within said envelope.

2. A slide calculator as claimed in claim **1**, wherein said third panel includes openings therein for exposing the surface of said slidable panel contained therein.

3. A slide calculator comprised of a single blank of cardboard and having at least three rectangular panels connected together in a predetermined pattern, a first panel connected along a widthwise edge to a second panel and a second panel connected at a lengthwise edge to a third panel, said third panel includes openings therein for exposing the surface of said slidable panel contained therein, said first and third panels including indicia on a surface thereof for determining the nature of the calculations to be effected, said first panel being folded along said widthwise edge to be disposed in a tubular envelope formed by the folding and joining together of said second and third panels, said first and second panels including perforated lines for defining tabs on said panels whereby the removal of said tabs renders such first panel slidable within said envelope.

4. A slide calculator comprised of a single blank of cardboard and having at least five rectangular panels connected together in a predetermined pattern, a first panel connected along a widthwise edge to a second panel and a second panel connected at a lengthwise edge to a third panel, said fourth and fifth panels being connected along a lengthwise dimension and said fourth panel being further connected to said third panel along its other lengthwise dimension, said first panel being folded along said widthwise edge to be disposed in a tubular envelope formed by the folding and joining together of said second and third panels, said first and second panels including perforated lines for defining tabs on said panels whereby the removal of said tabs renders such first panel slidable within said envelope, said fourth and fifth panels being folded to form a second tubular envelope containing said first envelope, said third and fourth panels including tabs formed by perforated lines, the removal of all of said tabs along said perforated lines effecting sliding engagement of said first envelope in said second envelope.

5. A slide calculator as claimed in claim **4**, wherein said third and fifth panels each include openings for providing viewing of said slidable elements when the same are so adapted.

6. A slide calculator as claimed in claim **4**, wherein said first panel, said third panel and said fifth panel include indicia on the side which remains on the outer surfaces when said elements are foldably connected.

7. A slide calculator comprised of a single blank of cardboard and having at least five rectangular panels joined together in a predetermined pattern, said first panel being coupled to said second panel at a common widthwise edge thereof, said second through fifth panels being joined along the lengthwise edges thereof, said third and fifth panels defining openings for viewing therethrough and said first, third and fifth panels including indicia thereon; said first panel being folded into a tubular envelope formed by said second and third panels, and said envelope being folded within an outer tubular envelope formed by the folding of said fourth and fifth panels, said first, second, third and fourth panels including removable tabs, whereby the removal of said tabs effects the slidable engagement of said first panel in said inner tubular envelope and the slidable engagement of said inner tubular envelope in said outer tubular envelope.

* * * * *