April 14, 1953 A. C. FJELD 2,634,999

ELECTRIC BULB HANDLING DEVICE

Filed June 12, 1950

Fig. 1

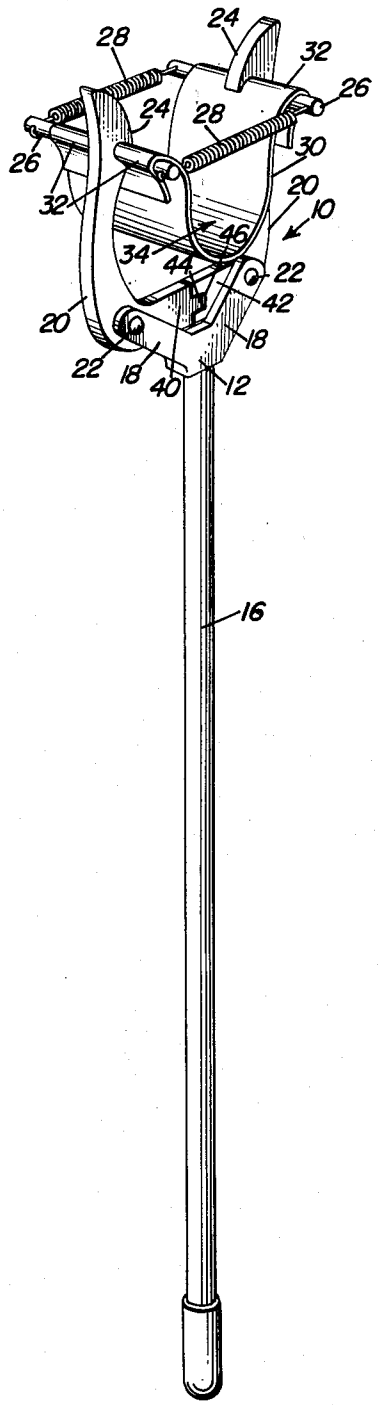

Fig. 2

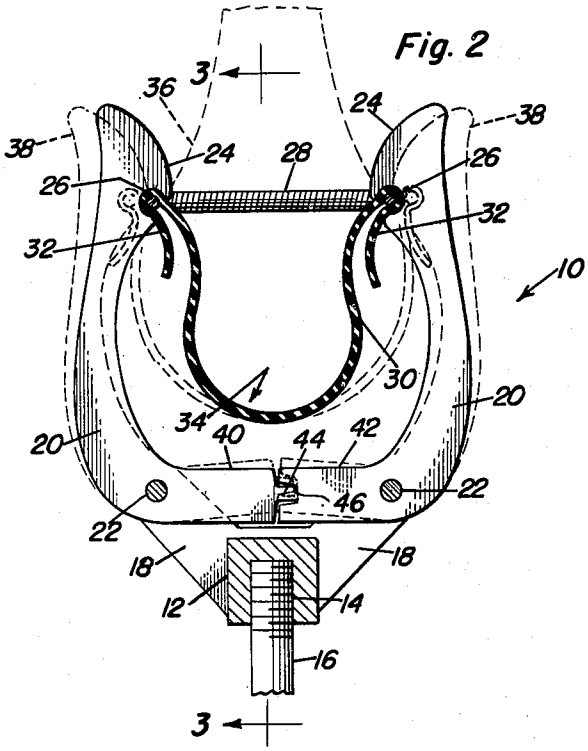

Fig. 3

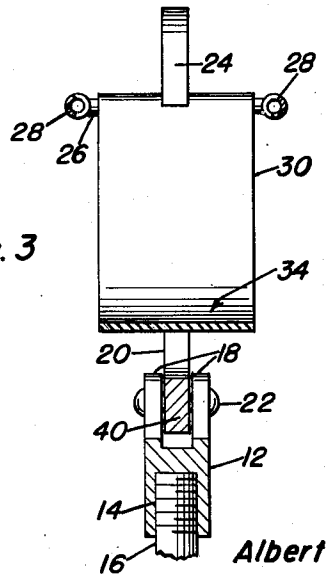

Albert C. Fjeld
INVENTOR.

BY Clarence A. O'Brien and Harvey B. Jacobson
Attorneys

Patented Apr. 14, 1953 2,634,999

UNITED STATES PATENT OFFICE

2,634,999

ELECTRIC BULB HANDLING DEVICE

Albert C. Fjeld, Minot, N. Dak.

Application June 12, 1950, Serial No. 167,559

3 Claims. (Cl. 294—20)

1

This invention relates to new and useful improvements and structural refinements in devices for handling electric bulbs, that is, for installing, removing and replacing electric bulbs in and from their sockets, and the principal object of the invention is to provide a device of the character herein described, which is particularly intended for remote handling of bulbs in poorly accessible locations, such as on high ceilings, chandeliers, farm yard lights, etc.

An important feature of the invention resides in the provision of means for frictionally engaging a bulb so as to prevent any accidental or unintentional displacement thereof while it is being handled.

Some of the advantages of the invention reside in its simplicity of construction, in its efficient and dependable operation, and in its adaptability to economical manufacture.

With the above more important objects and features in view and such other objects and features as may become apparent as this specification proceeds, the invention consists essentially of the arrangement of parts as illustrated in the accompanying drawings, in which:

Figure 1 is a perspective view of the invention;

Figure 2 is a fragmentary enlarged view thereof, this being partially broken away so as to reveal its construction, and

Figure 3 is a transverse sectional view, taken substantially in the plane of the line 3—3 in Figure 2.

Like characters of reference are employed to designate like parts in the specification and throughout the several views.

Referring now to the accompanying drawings in detail, the invention consists of an electric bulb handling device which is designated generally by the reference character 10 and embodies in its construction a support member 12 provided with a screw-threaded bore 14 to receive an end portion of an extension shaft 16, the support member 12 also being provided with two pairs of transversely spaced and upwardly projecting ears 18.

A pair of coacting jaws 20 are disposed in spaced, co-planar relation and are pivotally mounted by suitable pins 22 between the respective pairs of ears 18, the jaws 20 having inwardly arcuated free end portions 24 which, by virtue of the pivotal mounting 22 of the jaws, are movable toward and away from each other.

A pair of transverse bars 26 are secured to and extend through the free end portions 24 of the jaws 20 and a pair of tension springs 28 are suitably connected to end portions of these bars, whereby the jaws 20 are urged together.

2

Moreover, an elongated sheet of flexible material such as rubber, or the like, indicated at 30 has the opposite end portions thereof wrapped around and secured to the respective bars 26 as indicated at 32, while an intermediate portion of the sheet depends from the bars and constitutes a bulb receiving pocket 34 disposed between the jaws 20, as shown.

Consequently, when the device is applied to an electric bulb shown at 36 in Figure 2, the free end portions 24 of the jaws 20 will first be spread outwardly as indicated at 38, and after the bulb assumes its position in the pocket 34, the free end portions 24 of the jaws 20 will be drawn inwardly, that is, toward each other by the springs 28 so as to firmly sustain the engagement of the device with the bulb.

Moreover, the flexible sheet of material 30 will frictionally engage the bulb 36, so that by simply rotating the extension shaft 16 the bulb may be installed in or removed from its socket, as the case may be.

In order to prevent any displacement or misalignment of the jaws 20 relative to one another, the fulcrumed portions of the jaws are provided with opposing cranks 40, 42, the former crank being equipped with a projecting tongue 44 which engages a notch or recess 46 formed in the free end portion of the crank 42. In this manner positive coaction of the jaws is assured.

It is believed that the advantages and use of the invention will be clearly understood from the foregoing disclosure and, accordingly, further description thereof at this time is deemed unnecessary.

While in the foregoing there has been shown and described the preferred embodiment of this invention it is to be understood that minor changes in the details of construction and arrangement of parts may be resorted to without departing from the spirit and scope of the invention as claimed.

Having described the invention, what is claimed as new is:

1. In an electric bulb handling device, the combination of a support member adapted for attachment to an extension shaft and provided with two pairs of transversely spaced and upwardly projecting ears, a pair of spaced co-planar jaws pivotally mounted between the respective pairs of ears and movable toward and away from each other, a pair of transverse bars secured to the respective upper extremities of the jaws, a pair of tension springs connecting together the ends of said bars and urging said jaws together, and an elongated sheet of flexible material having oppo-

site ends thereof secured to the respective bars, said sheet depending from said bars and affording a bulb receiving pocket disposed between said jaws.

2. The device as defined in claim 1 together with a pair of cranks provided on the respective jaws adjacent the pivotal connection of the latter to said ears, and means operatively connecting said cranks together.

3. The device as defined in claim 2 wherein said means comprise a projecting tongue provided on one of said cranks, the other crank being formed with a notch to receive said tongue.

ALBERT C. FJELD.

References Cited in the file of this patent

UNITED STATES PATENTS

Number	Name	Date
388,776	Hall	Aug. 28, 1888
606,736	Platt et al.	July 5, 1898
809,985	Rundberg	Jan. 16, 1906
840,102	Bates	Jan. 1, 1907
1,482,147	Potts	Jan. 29, 1924
1,757,711	Grinnell	May 6, 1930
1,787,670	Clarkson	Jan. 6, 1931

FOREIGN PATENTS

Number	Country	Date
7,527	France	June 14, 1907