Feb. 26, 1935. E. E. STEVENSON 1,992,402

SOLID PLUNGER LINER PUMP

Filed May 14, 1932 2 Sheets-Sheet 1

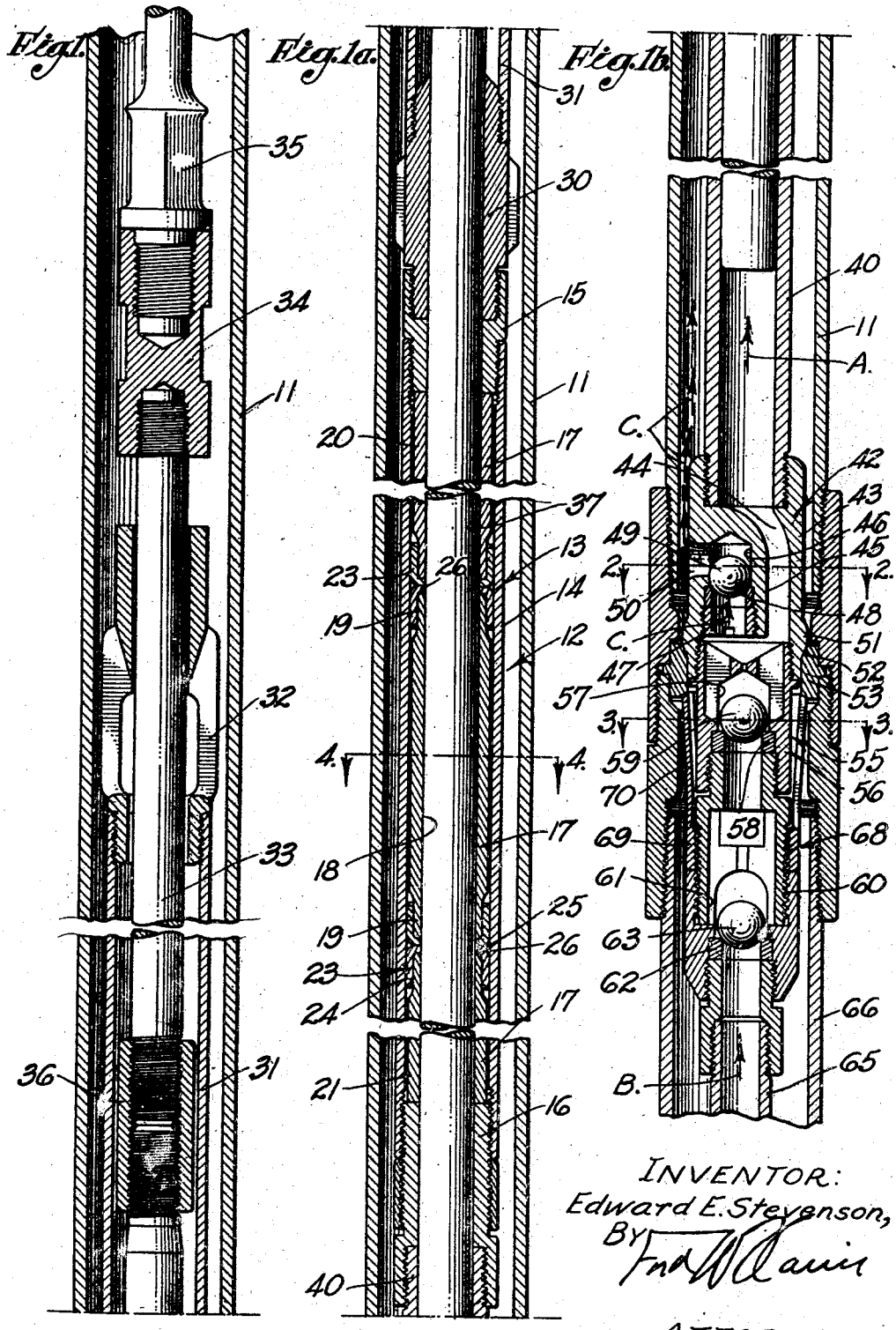

INVENTOR:
Edward E. Stevenson,
BY Fred W. Davis
ATTORNEY.

Feb. 26, 1935. E. E. STEVENSON 1,992,402

SOLID PLUNGER LINER PUMP

Filed May 14, 1932 2 Sheets-Sheet 2

Fig. 5.

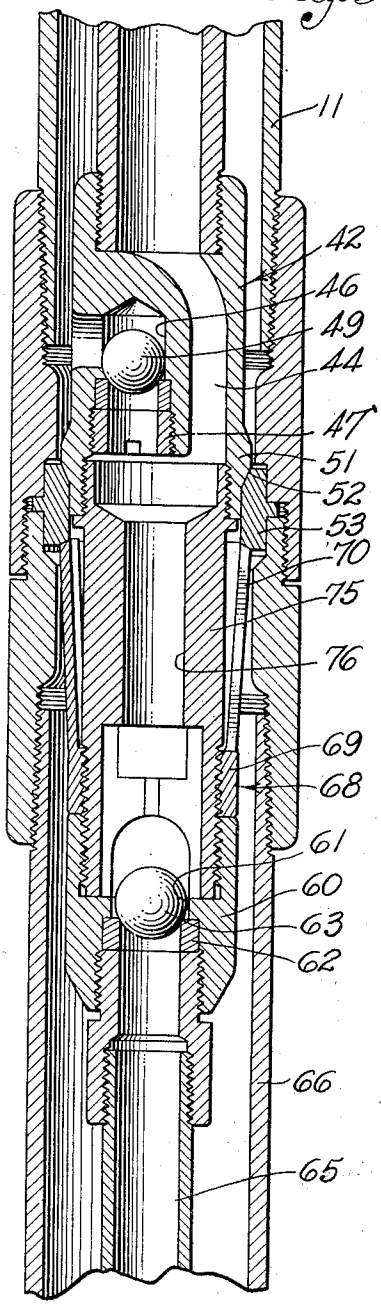

Fig. 2.

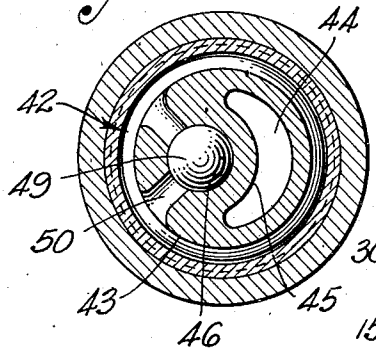

Fig. 3.

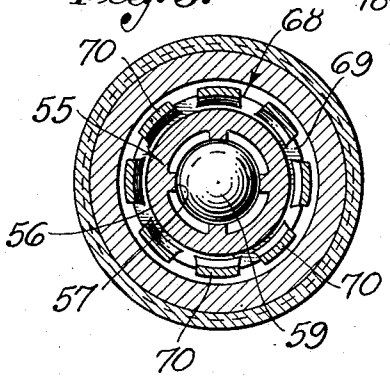

Fig. 4.

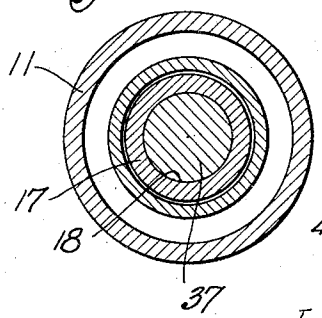

Fig. 6.

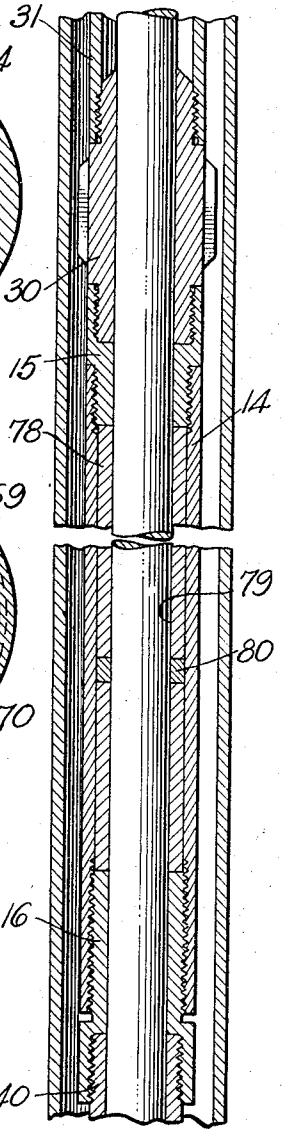

INVENTOR:
Edward E. Stevenson,
BY Fad A. Mann
ATTORNEY.

Patented Feb. 26, 1935 1,992,402

UNITED STATES PATENT OFFICE

1,992,402

SOLID PLUNGER LINER PUMP

Edward E. Stevenson, Los Angeles, Calif., assignor to Emsco Derrick & Equipment Company, Los Angeles, Calif., a corporation of California

Application May 14, 1932, Serial No. 611,344

5 Claims. (Cl. 103—155)

My invention relates to the oil-producing industry and particularly to oil-well pumping equipment. The invention is directed generally to the same type of pump which is disclosed in my copending application entitled Solid plunger cup-type pump, Serial No. 611,343, filed May 14, 1932, now abandoned.

The common form of pumping equipment used for taking oil from the ground has a pump barrel which is placed near the bottom of a well and which is attached to the lower end of a pump tubing extending into the well from the surface of the ground, or if a pump tubing is not used, the pump barrel may be supported in an oil string by a suitable seal, the oil string extending into the oil-bearing formation at the bottom of the well. Adapted to reciprocate in the pump barrel is a plunger which is attached to the lower end of a string of sucker rods. The string of sucker rods extends through the oil string and a stuffing box secured at the upper end thereof and is operably connected to a walking beam which is placed on the floor of the derrick of the well. The walking beam is oscillated by a suitable well known means to reciprocate the sucker rods and the pump plunger, thus pumping oil to the surface of the ground through the oil string.

The ordinary type of pump barrel includes a standing valve at the lower end thereof through which the plunger draws oil from the well into the pump barrel as the plunger travels upward. The common form of plunger is tubular in form and is provided with one or more series of alternately superimposed cup rings and flexible cup members which frictionally engage the inner wall of the pump barrel. This form of plunger is also provided with a travelling valve in the lower end thereof and a check valve in the upper end thereof. In the operation of this plunger, the oil in the pump barrel below the plunger is displaced through the travelling valve into the interior of the plunger during the downward travel thereof. The oil previously carried in the interior of the plunger is displaced through the check valve at the upper end thereof into the oil string and is subsequently lifted by the plunger during its upward travel.

As is well known, oil wells today are being drilled to greater and greater depths, and with this increase in depth the forces making up the variable load on the sucker rods of the pump have increased proportionately. These increased forces which must be reckoned with are increased weight of the sucker rod due to the increased length therof, the increased weight of the column of oil being lifted due to the increased depth of the well, increased frictional resistances, and greater inertia forces. These enormously increased forces directly resultant from the increased depth to which wells are now being drilled have been found to be the source of great difficulty in the operation of ordinary pumping equipment inasmuch as these forces have been known to cause the sucker rods of a well to stretch to such an extent that the oscillation of the walking beam is absorbed in the sucker rods with the result that the pump plunger remains practically stationary.

To partially overcome the above mentioned difficulty, it is now general practice in the oil industry to reduce the diameter of the well casing as the depth of the well increases, which allows the use of an oil string or pump tubing of relatively small diameter in which an extremely small diameter pump is used, thus reducing the load on the sucker rods.

Various small diameter pumps have been designed, these pumps having cup type tubular plungers as small as 1½" in diameter. These plungers have not been found to be fully satisfactory, due to the extremely small travelling valve openings and the extremely small interior cross-sectional area of the plunger.

I have designed my pump having in mind as a primary object a pump in which the plunger is solid so that an extremely small plunger diameter of 1" may be satisfactorily used.

It is another object of my invention to provide an oil well pump having a pump barrel extending into an oil string of a well and being sealed at the lower end thereof to provide an oil passage, and having a valve mechanism operable to alternately permit oil to be drawn from the well below the seal into the barrel and to permit oil to be expelled from the barrel into the fluid passage above the seal during the reciprocation of the plunger in the barrel.

It is another object of my invention to provide an oil-well pump of the type described in the above paragraph in which, by the upward movement of the plunger, the oil is drawn from the well below the seal into the pump barrel through a valved passage communicating with the lower end of the barrel, and in which, by the downward movement of the plunger, the oil is expelled from the barrel through a valve passage communicating between the lower end of the barrel and the valved passage above the seal.

It is another object of my invention to provide in a pump of the type described in the above

paragraph a pump barrel comprising an outer shell and a plurality of coaxially positioned liners providing a longitudinal bore in which the pump plunger reciprocates, which liners are supported in semi-rigid spaced relationship with the shell.

It is another object of my invention to provide a pump having liners of the type described in the above paragraph, these liners being provided with cup-shaped annular rings formed of a semi-resilient material, which rings extend over the opposite longitudinal ends of each of the liners and which contact the inner wall of the shell to support the liners in semi-rigid spaced relationship therewith, and the adjacent ends of adjacent pairs of these cup-shaped rings being pressed together to form a fluid-tight seal therebetween.

These and other objects will be made evident in the following part of the specification. The specification may be more clearly understood with reference to the accompanying drawings.

In the drawings:

Figs. 1, 1*a*, and 1*b* comprise a longitudinal section through the pump of the invention. Of these figures, Fig. 1*a* is a continuation of Fig. 1, and Fig. 1*b* is a continuation of Fig. 1*a*.

Figs. 2 and 3 are horizontal sectional views taken as respectively indicated by the lines 2—2 and 3—3 of Fig. 1*b*.

Fig. 4 is a horizontal sectional view taken as indicated by the line 4—4 of Fig. 1*a*.

Fig. 5 is a somewhat enlarged view comparable to the lower portion of Fig. 1*b*, but showing an alternative form of valve construction.

Fig. 6 is a longitudinal sectional view illustrating an alternative form of pump barrel liners.

Referring to Figs. 1, 1*a*, and 1*b*, the numeral 11 designates an oil string which is ordinarily extended into an oil well after the oil-bearing formation has been penetrated. Adapted to extend into the oil string 11 and to operate near the lower end thereof is a pump generally designated by the numeral 12.

The pump 12 includes a pump barrel 13 which comprises a tubular shell 14 threadedly connected at the upper end thereof to a pipe joint 15 comprising the head of the barrel, and threadedly connected at the lower end thereof to a pipe joint 16 comprising the shoe of the pump barrel.

Coaxially positioned in the pump barrel shell 14 between the head 15 and the shoe 16 is a plurality of tubular liners 17 adapted to cooperate to form a longitudinal bore 18 throughout the length of the barrel 13. The liners 17 are of a smaller external diameter than the internal diameter of the shell, and each is provided with a reduced diameter portion 19 at their opposite longitudinal ends. The uppermost liner 20 and the lowermost liner 21 in the barrel 13 have a reduced diameter portion 19 only at their respective inner ends, the outer ends thereof being formed as shown and are adapted to abut the inner ends of the head 15 and shoe 16 respectively, as shown in Fig. 1*a*.

Placed over such reduced diameter end portion 19 of each of the liners 17 is a cup-shaped centering member 23 formed of a semi-resilient material such as hard rubber or the like, and which comprises an annular rim 24 adapted to surround the portion 19 and an inwardly extending annular flange 25 adapted to cover an annular end surface 26 of the liners 17 substantially as shown. The external diameter of the annular rim 24 of the centering member 23 is such as to be a "press fit" in the shell 14 so that this centering member serves to support the liners 17 in a semi-rigid spaced reationship with the shell 14. The liners 17 and the included centering member 23 when assembled in the shell 14 are compressed longitudinally by screwing the shoe 16 inwardly sufficiently to tightly compress the adjacent flange portions 25 of adjacent pairs of the centering member 23 throughout the length of the shell 14, thus making a fluid-tight seal between the adjacent ends of the liners 17.

Threadedly secured to the outer end of the head 15, as shown, is a coupling member 30 which in turn is threadedly connected to the lower end of a tubular extension 31 which terminates upwardly in a threaded portion adapted for connection to a rod guide 32. The rod guide 32 is provided with a longitudinal opening for the reception of an extension rod 33 which is connected at its upper end by a coupling 34 to a string of sucker rods 35, and is connected at its lower end by a coupling 36 to a pump plunger 37 which extends downwardly through the extension 31, the coupling 30, the head 15, and into the bore 18 provided by the liners 17.

The pump plunger 37 comprises a solid cylindrical rod which is machined to a suitable diameter to provide a running fit with the bore 18 and with the interior machined surfaces of the head 15 and the coupling 30.

Threadedly secured to the outer end of the shoe 16 in the manner shown is a tubular shoe extension 40 which, together with the shoe 16 has a cylindrical interior surface machined to form a continuation of the bore 18.

Threadedly secured to the lower end of the extension 40 is a valve cage 42 comprising a cylindrical body 43 having a longitudinal bore 44 extending therethrough. Formed on the interior surface of the bore 44 is an inwardly extending projection 45 provided with a downwardly opening recess 46 communicating with the bore 44. Positioned in the recess 46 and retained by a threaded, centrally bored nut 47 is an annular ring providing an upwardly disposed ball seat 48. Resting on the seat 48 within the recess 46 is a ball 49. Formed in the wall of the body 43 is a laterally extending port 50 communicating between the recess 46 and the exterior of the body 43. Formed on the outer cylindrical surface of the body 43 is an enlargement 51 providing a lower beveled surface 52 adapted for gravitational contact with an annular seat member 53 supported in any suitable manner by the oil string 11, this contact between the enlargement 51 and the seat member 53 serving to provide a fluid-tight seal between the barrel 13 and the oil string 11.

Threadedly connected to the lower end of the valve cage 42 is a valve cage 55 comprising a body 56 having a longitudinal passage 57 in which is positioned a ring forming a ball seat 58 and a ball 59 resting thereon in the manner shown.

Threadedly connected in the manner shown to the lower end of the cage body 56 is an additional valve cage 60 which may be similar to the cage 42 or be of any suitable type, such as is shown in Fig. 1*b*, having a longitudinal passage 61 providing a seat 62 upon which is supported a ball 63.

Threadedly secured, in the manner shown, to the lower end of the valve cage 60 is an induction tube 65 which extends downwardly into the lower portion 66 of the oil string.

Secured to an upper portion of the cage 60 is

a lock element 68 comprising a ring 69 threadedly secured to the cage 60 as shown, and a plurality of upwardly extending spring fingers 70. As will be seen by inspecting Fig. 1*b*, the upper surfaces of the spring fingers 70 are beveled and are adapted to frictionally engage a beveled lower surface of the seat member 53 when the enlargement 52 of the cage 42 is seated upon the seat member 53 and serves to prevent the separation of these parts.

The details of construction of the sealing means 53 and the locking element 68 constitute no part of the present invention, but have been shown merely for the purpose of illustrating the manner in which the pump barrel is locked in the oil string.

The valve cages 55 and 60 and their included valve balls 59 and 63 comprise what I shall hereinafter refer to as the primary valve means of the invention. The valve cage 42 and its included valve ball 49 comprises what I shall hereinafter refer to as the secondary valve means of the invention. It will be seen by inspecting Fig. 1*b* that the longitudinal passage 61 of the cage 60, the longitudinal passage 57 of the cage 55 and the bore 44 of the valve cage 42 cooperate to form a continuous passage communicating between the lower end of the barrel extension 40 and the induction tube 65.

The operation of this form of my invention is as follows:

Assuming that the pump plunger 37 is in its lowermost position, as indicated in Fig. 1*b*, an upward movement thereof in the direction of the arrow A of Fig. 1*b* will cause the valve balls 59 and 63 to lift from their respective seats 58 and 62 and allow oil from the well to be drawn upward through the induction tube 65 in the direction of the arrow B through the passages 61 and 57 of the valve cages 60 and 55, the bore 44 of the valve cage 43, and into the bore 18 of the pump barrel. As soon as the upward travel of the plunger 37 ceases, the balls 59 and 63 will seat on their respective seats and serve to hold the oil which has been drawn into the bore 18. Subsequent downward movement of the plunger 37 in the direction opposite to that of the arrow A will build up a pressure in the bore 18 and the passage 44 sufficiently great to lift the ball 49 from its seat 50 and allow the oil contained in the bore 18 to be forced downward through the bore 44 and upward through the valve seat 48, the lateral passage 50, and into the annular fluid passage between the exterior of the barrel 13 and the oil string 11 substantially as indicated by the arrows C of Fig. 1*b*.

The liners 17 and the included centering members 23 serve to centralize the plunger relative to the walls of the barrel and the machined inner surfaces of the coupling 30, the head 15, the shoe 16, and the extension 40.

It will be apparent that due to the fact that the liners 17 are more or less flexibly supported in the barrel 13 by the centering members 23, a slight warpage or irregularities in the cylindrical surface of the plunger will have no appreciable wearing effect on the bore 18, the individual liners being capable of slight lateral movement in the barrel 13 to compensate for these irregularities as the plunger reciprocates in the bore. This feature entirely obviates the necessity of machining the outer surfaces of the liners and the inner surface of the pump barrel shell 14, thus reducing the cost of manufacture considerably.

Referring to Fig. 5, in which is illustrated an alternative form of valve construction and in which identical parts will be designated by similar characters, the construction of this form of the invention is identical with that of the preferred form with the exception that only one primary valve means is shown. Threadedly secured to the lower end of the cage 42 is a cylindrical sleeve 75 providing a longitudinally extending passage 76. The lower end of the sleeve 75 is threadedly connected to the valve cage 60 in such a manner that the longitudinal passage 61 of the cage 60, passage 76 of the sleeve 75, and the bore 44 of the cage 42 cooperate to form a continuous passage communicating between the bore 18 of the extension 40 and the induction tube 65.

The operation of this form of my invention is identical with the operation of the preferred form described above and need not be repeated.

In Fig. 6 I show an alternative form of liner construction and will designate identical parts of this form with characters similar to those used in the preferred form of the invention. Slidably positioned in the barrel shell 14 between the head 15 and the shoe 16 is a plurality of tubular liners 78 cooperating to form a bore 79, the longitudinal axis of which coincides with the longitudinal axis of the shell 14. Positioned between the adjacent ends of each of the liners 78 is an annular ring 80 made of a suitable material adapted to form a fluid-tight seal between these adjacent liners when the liners are longitudinally compressed between the head 15 and the shoe 16.

I have herein disclosed and described a preferred form and an alternative form of liner construction particularly suited for use in connection with a pump plunger of extremely small diameter. An efficient pump of this type may be built of a diameter considerably smaller than the smallest diameter that it is possible to obtain in an ordinary type of pump having a tubular plunger.

I have also disclosed and described a preferred form and an alternative form of valve construction. The exact details of construction of the pump valves, however, are immaterial to the invention and should be limited only by the scope of the appended claims.

I claim as my invention:

1. In a pump barrel, the combination of: an outer tubular shell; a plurality of tubular liners positioned end to end coaxially in said shell to provide a longitudinal bore adapted to receive a reciprocating plunger; and centering means having semi-rigid walls positioned around the ends of said tubular liners and having inwardly extending walls which project inwardly between the end faces of said liners, said centering means being associated with each of said liners for supporting said liners in spaced relationship with said shell.

2. In a pump barrel, the combination of: an outer tubular shell; a plurality of tubular liners positioned end to end coaxially in said shell to provide a longitudinal bore adapted to receive a reciprocating plunger; and a plurality of annular flexible rings formed of a non-metallic packing material surrounding the adjacent longitudinal ends of said liners to form a fluid-tight seal therebetween, said rings contacting said shell to support said liners in spaced relationship therewith.

3. In a pump barrel, the combination of: an outer tubular shell; a plurality of tubular liners positioned end to end coaxially in said shell to provide a longitudinal bore adapted to receive a reciprocating plunger; and a plurality of annular flexible rings surrounding the opposite lon-

gitudinal ends of each of said liners and having inwardly extending walls which extend between the end walls of said liners, said rings contacting said shell to support said liners in spaced relationship with said shell; and means for longitudinally compressing said liners to press together the adjacent ends of adjacent pairs of said rings to secure said liners in axial alignment.

4. In a pump barrel, the combination of: an outer tubular shell; a plurality of tubular liners positioned end to end coaxially in said shell to provide a longitudinal bore adapted to receive a reciprocating plunger; a plurality of cup-shaped rings formed of a semi-resilient material, each of said rings having an annular portion surrounding the peripheral portion of the opposite longitudinal ends of each of said liners and a laterally inward extending portion covering the radial end surfaces of said liners, and said rings contacting said shell to support said liners in spaced relationship therewith; and means for longitudinally compressing said liners to press together the adjacent laterally extending portions of adjacent pairs of said rings to secure said liners in axial alignment.

5. In a pump, the combination of: a pump barrel; valve means at the lower end thereof for the intake and exhaust of liquid to be pumped; a packing means at the upper end thereof, said packing means including a plurality of tubular members; centering means having semi-rigid walls positioned around the ends of said tubular liners and having inwardly extending walls which project inwardly beyond the end faces of said liners, said centering means being associated with each of said liners for supporting same in spaced relation at the upper end of said barrel; a solid plunger extending through said packing means into said barrel and being reciprocable therein, said plunger being of uniform diameter throughout its length, and said barrel and said packing means providing a uniform diametered bore for said plunger; a shoulder connected to said barrel, said shoulder being placed a distance above said packing means; and an abutment on said plunger above said packing means engageable with said shoulder for preventing said plunger from being withdrawn from said packing means.

EDWARD E. STEVENSON.