Nov. 9, 1948. G. DYER 2,453,421

LAMP BOX TYPE DIRECTION SIGNAL

Filed Jan. 28, 1947 2 Sheets-Sheet 1

Fig. 1

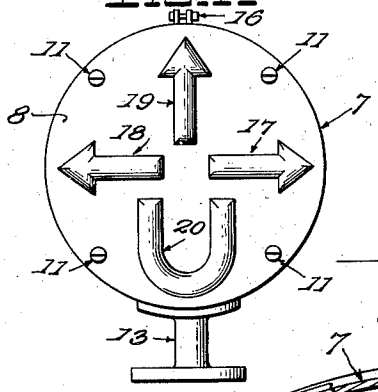

Fig. 2

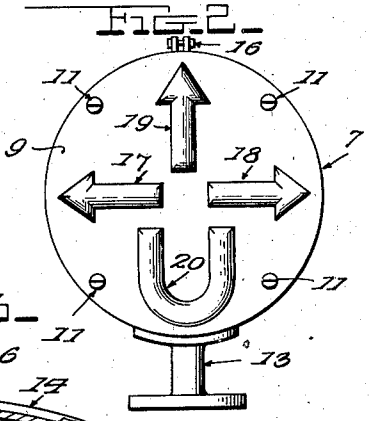

Fig. 3

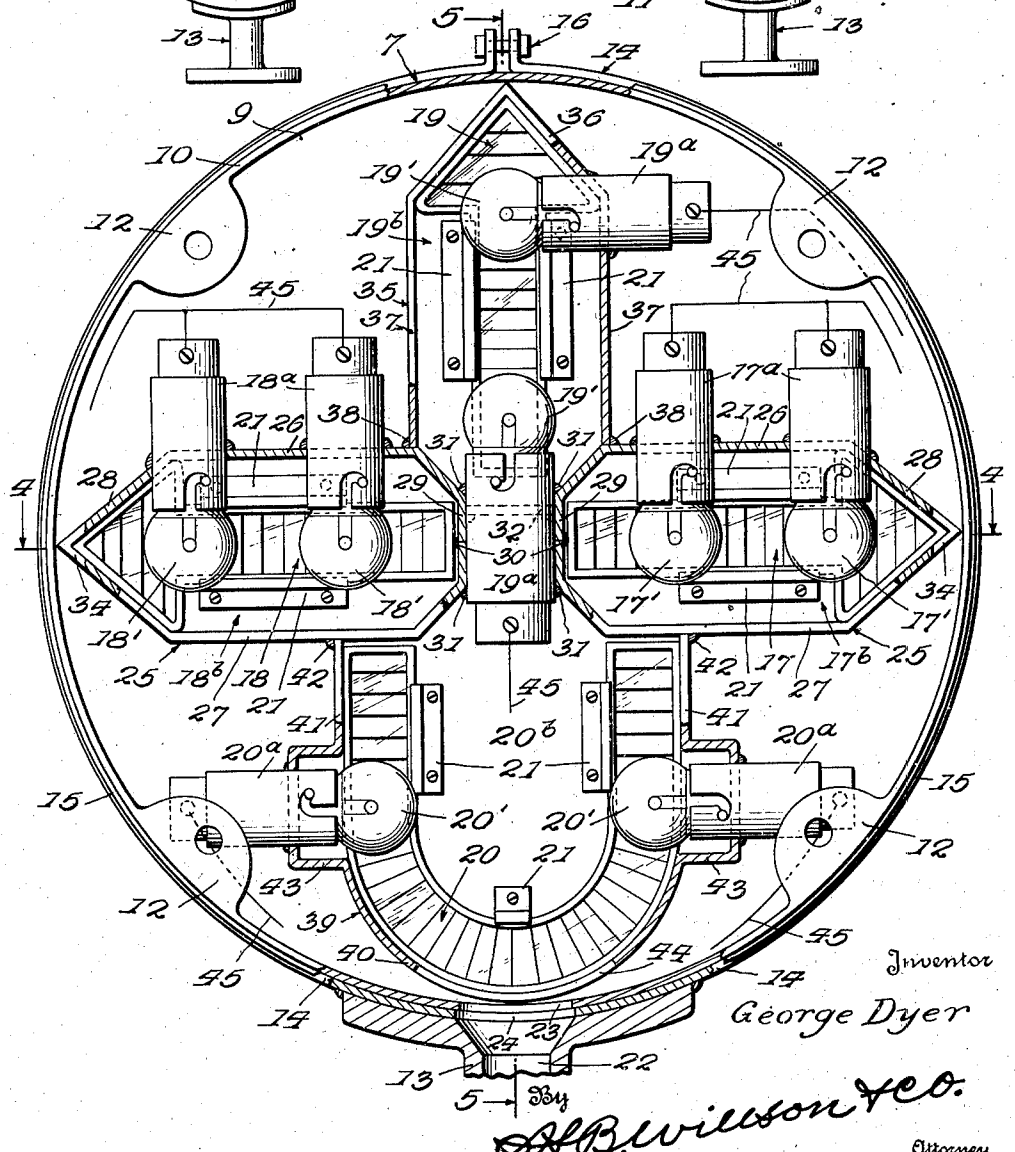

Inventor
George Dyer

By
A. B. Wilson & Co.

Attorney

Nov. 9, 1948. G. DYER 2,453,421

LAMP BOX TYPE DIRECTION SIGNAL

Filed Jan. 28, 1947 2 Sheets-Sheet 2

FIG. 4

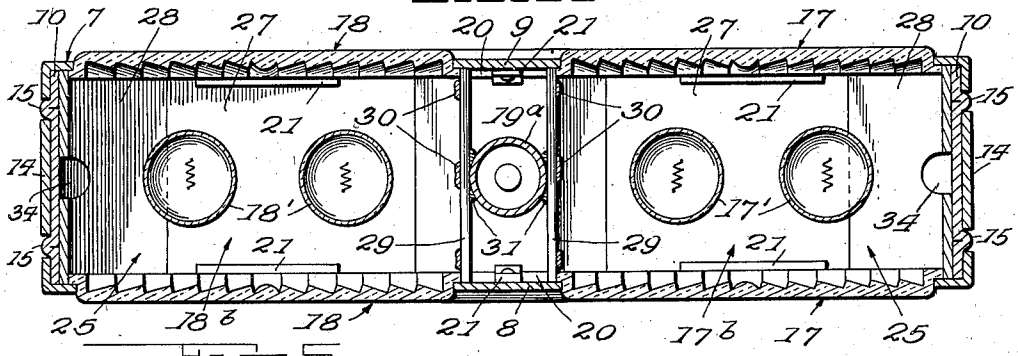

FIG. 5

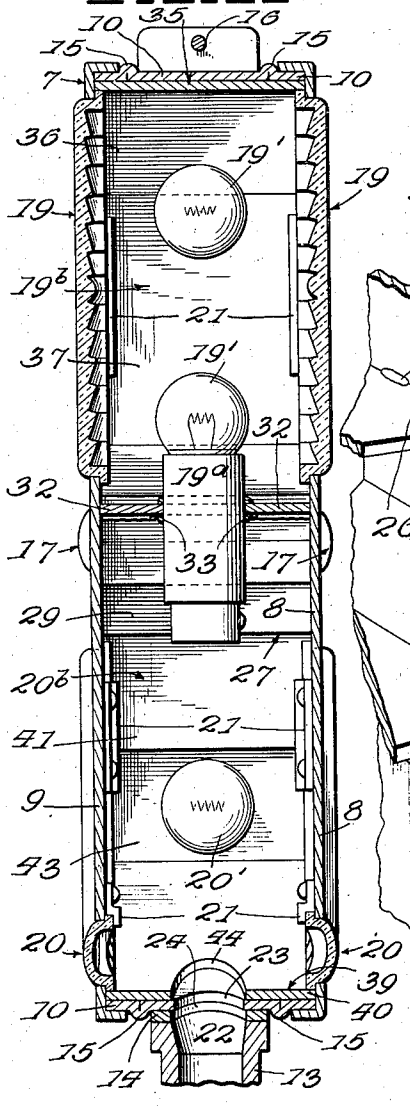

FIG. 6

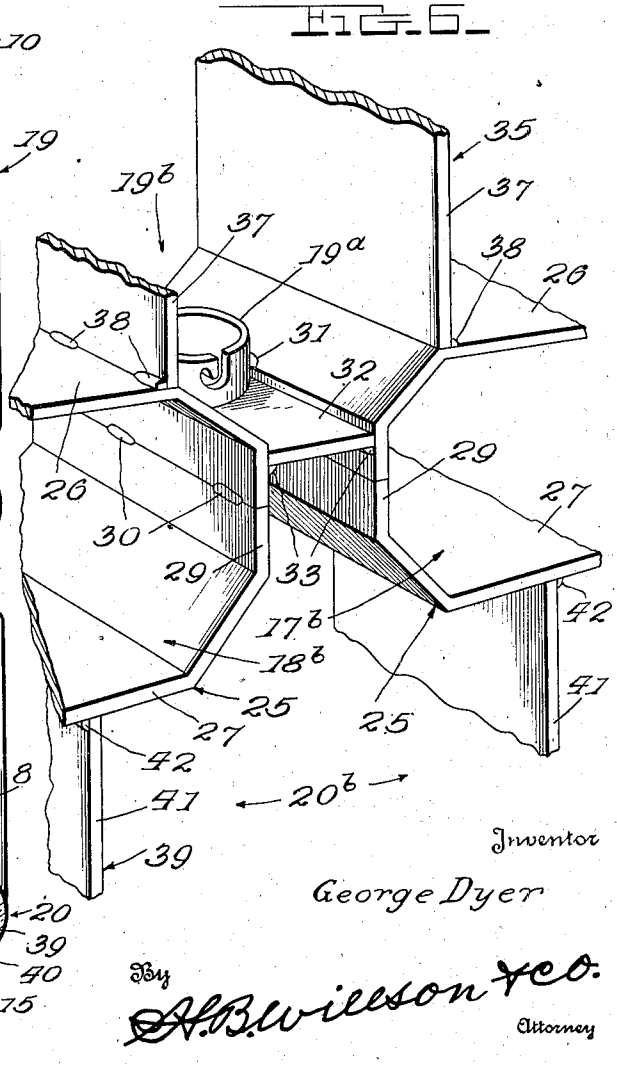

Inventor

George Dyer

By A. B. Willson & Co.

Attorney

Patented Nov. 9, 1948 2,453,421

UNITED STATES PATENT OFFICE

2,453,421

LAMP BOX TYPE DIRECTION SIGNAL

George Dyer, Cheyenne, Wyo.

Application January 28, 1947, Serial No. 724,737

2 Claims. (Cl. 177—329)

1

The invention relates to automobile turning signals of the general type having a plurality of translucent signalling members of colored glass or the like, to be selectively illuminated to indicate the driver's intentions.

One object of the invention is to provide a novel signalling device having a "right-turn" arrow, a "left-turn" arrow, a "through" arrow, and a letter U indicating a U-turn, or a letter S to indicate that a stop will be made. The U is preferred but the S may be used in cities which prohibit U-turns.

Separate illuminating light bulbs are provided within a casing which carries the signalling members, for the purpose of selectively illuminating said members, and a further object of the invention is to provide a simple, inexpensive and effective construction within said casing for defining a plurality of cells which contain the light bulbs and are allotted individually to the signalling members, insuring that when any one of the signalling members is to be illuminated, the others shall remain unilluminated.

Yet another object is to provide a construction which may be easily and inexpensively manufactured, profitably sold at a reasonable cost, may be readily mounted in any of a number of locations on an automobile or other vehicle, and will be effective and reliable.

Figures 1 and 2 are respectively a front elevation and a rear elevation, showing that both front and rear of the device may be made to give duplicate signals, and this is preferable to permit one device to suffice for a car instead of having one at the front and another at the rear.

Fig. 3 is a front elevation with the front wall removed, a number of parts being broken away and in section.

Fig. 4 is a horizontal sectional view on line 4—4 of Fig. 3.

Fig. 5 is a vertical sectional view on line 5—5 of Fig. 3.

Fig. 6 is a fragmentary perspective view showing a portion of the cell-forming means.

A preferred construction has been illustrated and will be specifically described, with the understanding, however, that variations may be made within the scope of the invention as claimed.

A casing 7 is provided having a front wall 8, a back wall 9, and a preferably cylindrical peripheral wall 10, said front and back walls being detachably secured to said peripheral wall by means of screws 11 extending through said front and back walls and threaded into apertured lugs 12 which project inwardly from said peripheral wall.

2

An attaching bracket 13 is provided for the casing 7, said bracket having a contractable band 14 surrounding the peripheral wall 10, between two beads 15 on the latter, a bolt or the like 16 being provided to contract the band 14 frictionally around the casing. When this bolt is loosened, the band 14 may rotate on the casing to dispose the bracket 13 for attachment either to a substantially horizontal surface of a car, or to an approximately vertical surface. After making this adjustment, the bolt 16 is tightened. The construction described in this paragraph is claimed in my divisional application Serial No. 790,939, filed December 11, 1947.

The front and back walls 8 and 9 of the casing 7 are each provided with a "right-turn" arrow 18, with a "left-turn" arrow 17, with a "through" arrow 19, and with a letter U (or S) 20. All of these signalling members are constructed from translucent colored glass or plastic and they are secured in suitable slots in the casing walls, in any preferred manner. For illustrative purposes, I have illustrated angle brackets 21 secured to the casing and securing the signalling members in place.

The turn arrows 17 and 18 are horizontal and radially disposed and have their heads at their outer ends; the "through" arrow 19 is centrally and vertically disposed above said turn arrows 17 and 18, and the latter 20 is vertically disposed centrally under said turn arrows 17 and 18. This relation is compact and attractive and makes the signalling members readily readable when illuminated, with no chance of misunderstanding the driver's intentions.

Within the casing 7, I provide a plurality of light bulbs allotted individually to the signalling members 17, 18, 19 and 20. The bulbs for the member 17 are shown at 17'; those for the member 18 at 18'; those for the member 19 at 19'; and those for the member 20 at 20'. The sockets for the bulbs 17' are illustrated at 17a; those for the bulbs 18', at 18a; those for the bulbs 19' at 19a; and those for the bulbs 20', at 20a.

All of these sockets and bulbs are preferably of the "single contact" type, and the wiring from the various sockets may extend to the interior of the car to a suitable control switch, through a suitable passage 22 in the bracket 13, the casing side wall 10 being formed with an opening 23 communicating with said passage 22, and the band 14 being formed with a plurality of openings 24, any of which may be alined with the opening 23, according to the angle at which the bracket extends from the casing (horizontal or vertical).

In order that the illumination provided by the various bulbs may be confined to the signalling members to which they are allotted, I provide a novel cell-forming construction within the casing providing one cell 17*b* for the bulbs 17'; one cell 18*b* for the bulbs 18'; one cell 19*b* for the bulbs 19', and one cell 20*b* for the bulbs 20'. Two horizontal cell-forming members 25 form the cells 17*b* and 18*b*, each of said members 25 having a top wall 26, a bottom wall 27, a pointed outer end wall 28, and an inner end wall 29. Each of these cell-forming members may well be formed from a single strip of metal with its ends forming the inner end wall 29 and soldered together as indicated at 30. One of the sockets 19*a* is disposed between these inner end walls 29 and is soldered or otherwise secured to it as shown at 31, thereby unitarily uniting the two cell-forming members 25. Also disposed between the two end walls 29 and shaped to fit against the socket 19*a*, are two partitions 32 which may be secured to said end walls by solder or the like 33 to further rigidly connect them. The top walls 26 of the two cell-forming members 25 carry the sockets 17*a* and 18*a* which may be soldered or otherwise secured to them. These members 25 completely surround the translucent signalling members 17 and 18 and have their pointed outer ends disposed at the casing wall 10, said pointed ends being notched at 34 to receive wires extending to the bulb sockets from the passage 22 of the bracket 13.

A vertical cell-forming member 35 contains the two bulbs 19' and surrounds the signalling member 19. This member 35 is formed with a pointed upper end wall 36 and with two vertical side walls 37, these side walls being soldered or otherwise secured at 38, at their lower ends, to the top walls 26 of the horizontal members 25. One of the walls 37 carries the socket 19*a* for the uppermost bulb 19'.

A lower cell-forming member 39 encloses the bulbs 20' and the signalling member 20, said member 39 having an outer end wall 40 and vertical side walls 41, the upper ends of the latter being soldered or otherwise secured to the lower side walls 27 of the horizontal members 25, as seen at 42. The side walls 41 have outwardly offset portions 43 carrying the sockets 20*a*, and the end wall 40 is by preference slotted as shown at 44 to prevent it from interfering with the wires extending through the openings 23 and 24.

The various side and end walls of the cell-forming members 25, 35 and 39, are of such width that they extend to and contact with the front and rear sides 8 and 9 of the casing 7 to prevent leakage of light, and as said width is greater than the diameter of the light sockets, the plates 32 extend from the lowermost socket 19*a* to said front and back sides of the casing to here prevent any leakage of light.

Wires are diagrammatically shown at 45 in Fig. 3, said wires being suitably connected with the various sockets of the light bulbs. The notches 34 and the openings 23, 24 and 44, accommodate these wires between the sockets and the bracket passage 22. The wiring is connected with an appropriate switch forming no part of the present invention, which switch is active to illuminate the bulbs 17' when a left turn is to be made, the bulbs 18' when a right turn is to be made, the bulbs 19' when it is to be indicated that the car will go straight through an intersection, and the bulbs 20' when the driver intends to make a U-turn. In cities where U-turns are prohibited, the letter S, it will be recalled, may be substituted for the letter U, for the signalling member 20, and the bulbs 20' will then act to illuminate this "stop" indication.

From the foregoing, taken in connection with the accompanying drawings, it will be seen that novel and advantageous provision has been made for carrying out the objects of the invention, and while preferences have been disclosed, attention is again invited to the possibility of making variations within the scope of the invention as claimed.

I claim:

1. In an automobile turning signal, a casing having front and back walls and a peripheral wall; two radial horizontal cell-forming members in said casing and each having upper and lower side walls and inner and outer end walls; a vertically disposed bulb socket between said inner end walls of said cell-forming members and secured to these inner end walls to unitarily unite them; a vertical cell-forming member in said casing having an outer end wall and side walls, the latter being secured at their inner ends to aforesaid side walls of said horizontal cell-forming members; a light bulb held in the aforesaid socket and disposed in the cell formed by said vertical cell-forming member; other light bulbs in the cells formed by said horizontal cell-forming members; and sockets for these bulbs secured to aforesaid side walls of said horizontal cell-forming members; said side and end walls of said cell-forming members having front and rear edges abutting said front and back walls of said casing; said end walls of said cell-forming members being disposed at said peripheral wall of said casing; at least one of said front and back walls of said casing having translucent signalling members allotted to the cells formed by said cell-forming members, said signalling members indicating different movements of the vehicle.

2. In an automobile turning signal, a casing having front and back walls and a peripheral wall; two radial horizontal cell-forming members in said casing and each having upper and lower side walls and inner and outer end walls; a vertically disposed bulb socket between said inner end walls of said cell-forming members and secured to these inner end walls to unitarily unite them; an upper vertical cell-forming member above the inner end portions of said horizontal cell-forming members, said vertical cell-forming member having an upper end wall and vertical side walls, the latter being secured at their lower ends to said upper side walls of said horizontal cell-forming members; a lower vertical cell-forming member having a lower end wall and side walls, the latter being secured at their upper ends to said lower side walls of said horizontal cell-forming members; a light bulb held in the aforesaid socket and disposed in the cell formed by one of said vertical cell-forming members; other light bulbs in the cells formed by the others of said cell-forming members; and sockets secured to aforesaid side walls of the last mentioned

cell-forming members and holding said other light bulbs; said side and end walls of said cell-forming members having front and rear edges abutting said front and back walls of said casing; said end walls of said cell-forming members being disposed at said peripheral wall of said casing; at least one of said front and back walls of said casing having translucent signalling members alloted to the cells formed by said cell-forming members, said signalling members indicating different movements of the vehicle.

GEORGE DYER.

REFERENCES CITED

The following references are of record in the file of this patent:

UNITED STATES PATENTS

Number	Name	Date
1,279,159	Riggs	Sept. 17, 1918
1,305,282	Heartsill	June 3, 1919
1,552,380	Ballard	Sept. 1, 1925
1,580,766	Schlotterbeck	Apr. 13, 1926
1,644,231	Bosworth	Oct. 4, 1927
1,733,885	Katt	Oct. 29, 1929
2,050,769	Stone	Aug. 16, 1936
2,088,370	Gingras	July 27, 1937
2,120,288	McCready	June 14, 1938