No. 855,244. PATENTED MAY 28, 1907.

H. C. GROS.

MACHINE FOR UNITING WELTS TO STOCK.

APPLICATION FILED MAY 31, 1904.

2 SHEETS—SHEET 1.

Fig. 1.

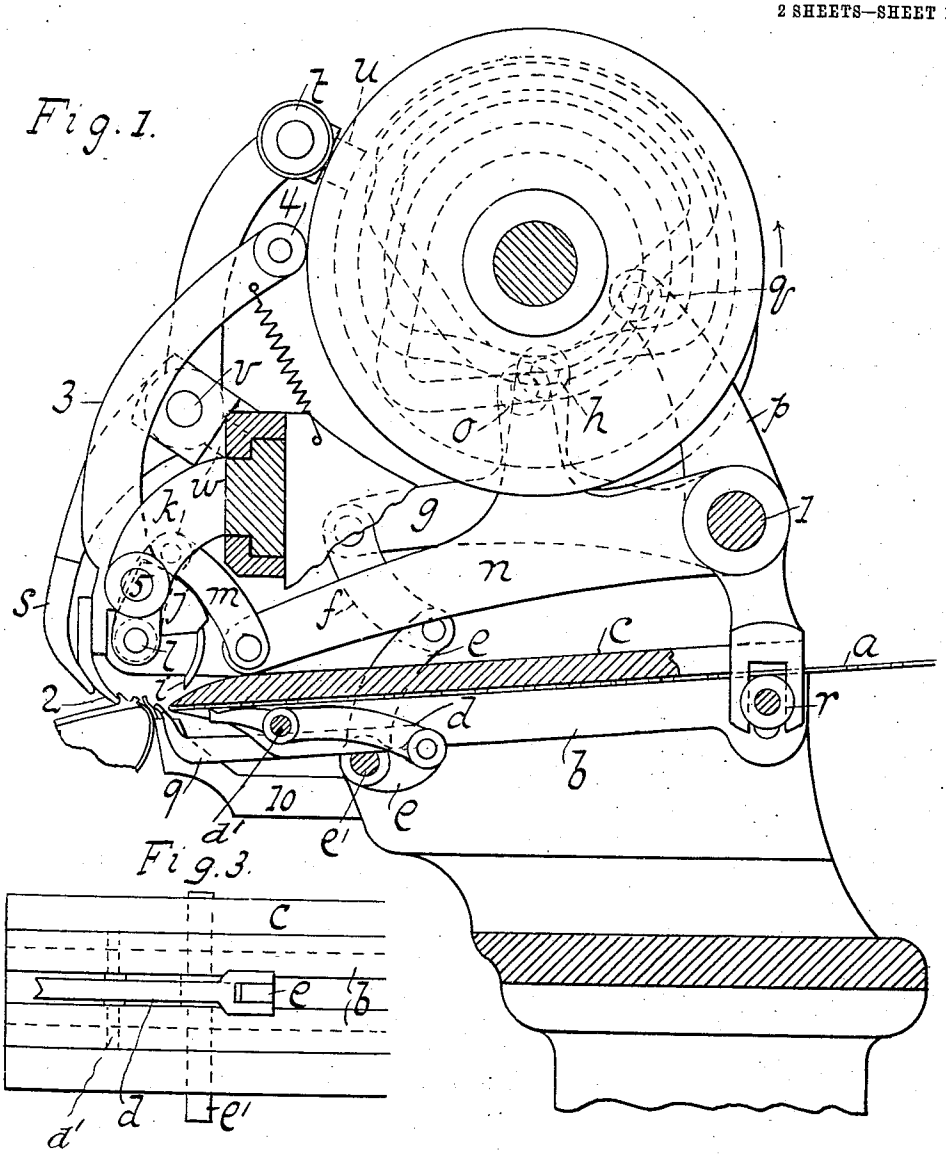

Fig. 3.

Fig. 5.

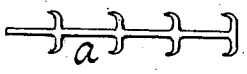

Fig. 6.

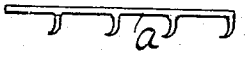

WITNESSES:

William Miller

Edward Wiesner

INVENTOR

Hermann C. Gros

BY W. C. Hauff

ATTORNEY

THE NORRIS PETERS CO., WASHINGTON, D. C.

No. 855,244. PATENTED MAY 28, 1907.

H. C. GROS.

MACHINE FOR UNITING WELTS TO STOCK.

APPLICATION FILED MAY 31, 1904.

2 SHEETS—SHEET 2.

Fig. 2.

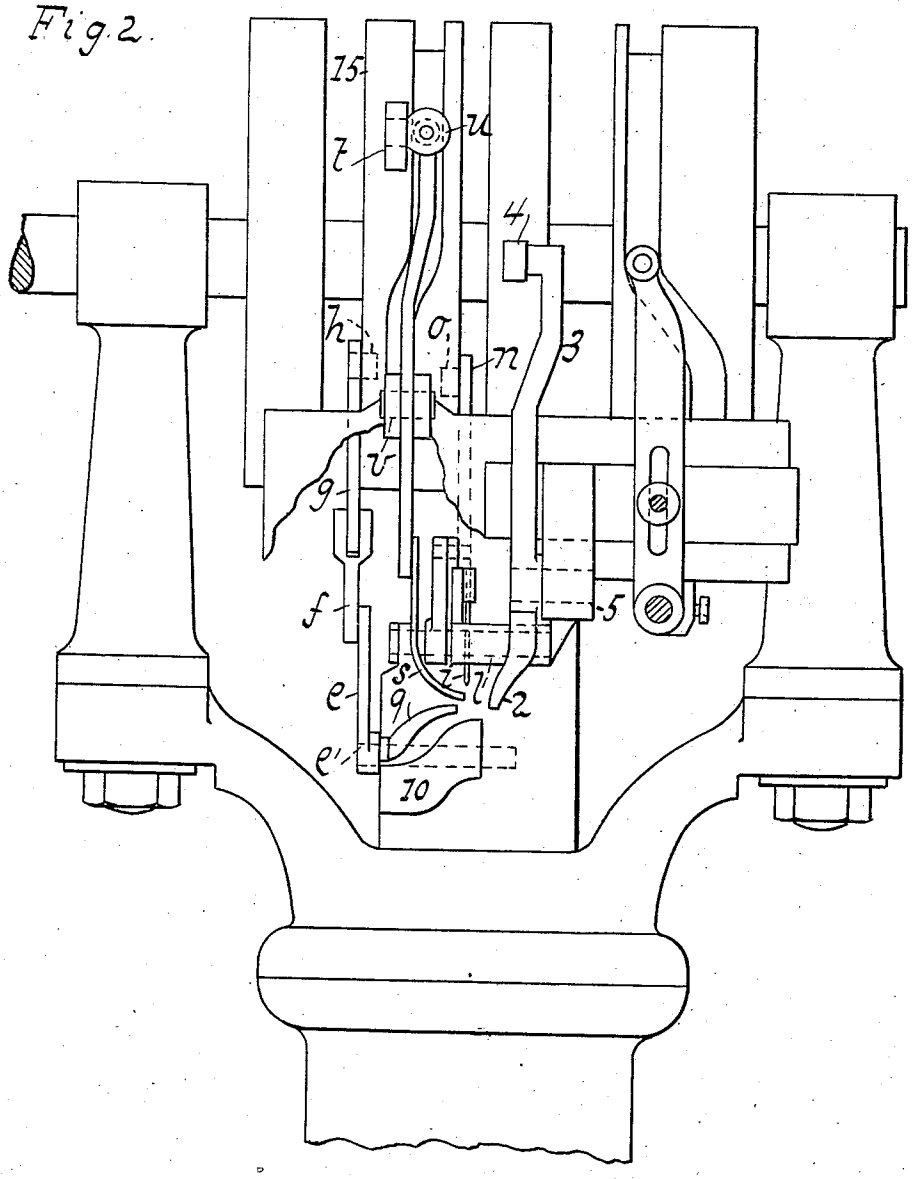

Fig. 4.

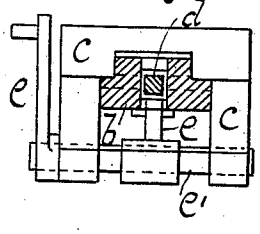

WITNESSES:

William Miller

Edward Wiemer

INVENTOR

Hermann C. Gros

BY W. C. Hauff

ATTORNEY

THE NORRIS PETERS CO., WASHINGTON, D. C.

UNITED STATES PATENT OFFICE.

HERMANN CARL GROS, OF LEIPZIG-LEUTZSCH, GERMANY.

MACHINE FOR UNITING WELTS TO STOCK.

No. 855,244. Specification of Letters Patent. Patented May 28, 1907.

Application filed May 31, 1904. Serial No. 210,360½.

To all whom it may concern:

Be it known that I, HERMANN CARL GROS, a subject of the King of Würtemberg, residing at Leipzig-Leutzsch, Bahnhofstrasse 38, Germany, have invented certain new and useful Improvements in Machines for Uniting Welts to Stock, of which the following is a specification.

My invention consists in a machine for uniting two or more layers of material, especially such as welts to uppers and insoles of boots and shoes,—uppers to soles of "turned" work and such like by means of a series of anchor-shaped staples or fasteners, such as described in the application for patent pending in the United States under Serial number 93,962, filed February 13th, 1902.

A hole is pierced through the materials to be united by a piercing instrument,—the pointed end of the shaft of the staples or fasteners, which in this case I prefer to shape or unite into an endless band,—is introduced into the pierced hole, a cutting device cuts off and separates the so introduced staple from the point and shaft of the next following staple, the cutting device being provided with a cavity to receive the head of the introduced staple, presses the latter tight into the body of materials to be united, being at the same time a resisting anvil which holds the staple in its place, while a bending instrument on the other side of the body of materials bends over the pointed shaft end of the staple and clenches it over and back into the material, thus pressing the whole body of the staple firmly in its place.

The accompanying drawings show a mode of carrying out my invention and the construction of the machine which in its appearance resembles and leans toward the principal form of construction of the wellknown "Goodyear" welt sewing machine.

Figure 1 is a vertical section,—Fig. 2 is a front elevation, both showing the head on the machine only, with its newly arranged working parts. Fig. 3 shows the race-way through which the endless band of staples is passing to the operating parts of the machine. Fig. 4 is a cross section of the parts of the raceway. Fig. 5 and 6 are views of a strip from which staples may be made.

The staple strip *a* consists of a series of staples hanging point to head on each other, either with an anchor-shaped head,—Fig. 5,—or hook-shaped head,—Fig. 6—. The strip of staples is wound upon a reel—(not shown on the drawings)—in well known manner and passes through the machine in a raceway consisting of two parts, the stationary bracket *c* and movable slide *b*. The movable part *b* of this feeding arrangement is fitted to and guided by the stationary part *c* and can slide back and forth along the same. The latter motion is effected by a double armed lever *p* oscillating on the pivot *l* fitted on the back part of the head of the machine. This lever *p* is provided on its top end with a roller *q* engaging with a curved disk on the main shaft of the machine, while with its lower end it is connected with the sliding bar *b* by means of a fork into which engages the roller *r* fastened to the rear end of the slide *b*. The roller is held by a pivot which is passed through a vertical slot in the end of the slide and may be adjusted in this slot and secured in adjusted position by a screw or nut not shown. By these means a longitudinal adjustable sliding motion is imparted to the sliding bar *b*.

The front part on the sliding bar *b* forms a bearing to which is secured by pivot or fulcrum *d'* the double armed lever *d* in such a manner that the forward and backward sliding motion of the sliding bar *b* is also imparted to the double armed lever *d*. The front end of the latter lever *d* is formed into a knife like sharp projection, which is caused to press upon the endless band of staples on the point of connection on head and shaft of the latter in such a manner, that first the endless band is carried along with lever *d* and sliding bar *b* when forward sliding motion is imparted to both, thus forcing the point and shaft of the end staple into the hole, previously pierced and then—when the end staple is properly placed, and further pressure is imparted to the knife-shaped end of lever *d* the end staple forced into the material is cut off and severed from the endless band.

The up and down motion necessary to be imparted to lever *d* at suitable intervals is effected by means of a bell crank lever *e* oscillating on the pivot *e'*, connected on its one end with double armed lever *d* while its other end is engaged by means of a link *f* with lever *g*, the latter swinging on pivot *l* and being provided with an upward projecting arm which is fitted with a roller *h* engaging into a curved disk on the main-shaft of the machine.

The hole which is to receive the staple shaft is pierced into the material in well known manner by means of an awl *i* mounted

in an oscillating segment *j* the latter being pivoted on the pivot *l*. By means of lever *k*, link *m* and lever *n* motion is imparted to the awl in well known manner as mentioned above. The lever *n* is actuated by its roller *o* engaging a cam groove in one of the eccentric disks of the machine.

The point of the staple shaft, after having been forced through the material and reaching through it, *i. e.* projecting from the latter in the inside of the channel, if such is used, is bent or clenched by means of a clenching instrument *s* to which is imparted a fourfold motion. This clencher or lever *s* has a double pivot support *v* and *w*, one pivot at right angles to the other so that said lever *s* can swing as required for the well known four motion stroke.

The upper arm of the clenchers is provided with two rollers—: the one *t* is pressed upon an eccentric disk 15 and forward and backward motion is imparted to it by the latter, swinging around the pivot *v* in a vertical plane, while the other roller *u* engages into a groove of the circumference of the disk, which transmits the required sidewise motion to the lower end of clencher *s*.

The carrying out of above described motions is also well known by the so-called "looper motion" in the "Goodyear" welt sewing machine.

The machine is also provided with a channel foot 2 fitted on double armed lever 3, which latter oscillates on pivot 5 and on its top end engages by means of roller 4 with a cam disk on the main shaft of the machine.

The feeding motion carried out by the latter—eventually with the aid of an auxiliary feed awl is identical to that shown and described in the United States Patent No. 412,704 describing the wellknown "Goodyear" welt sewing machine and therefore needs no further description here.

Weltgage 9 and workguide 10 are also provided on the machine in wellknown manner.

The operation of the machine, when adopted for uniting welts with uppers and soles of boots and shoes is as follows: The work, consisting of upper and insole lasted on a last, is brought to bear against the weltgage 9 and work guide 10 with its inside channel resting against the channel foot 2, all such receiving parts being arranged and substantially operated as is known in all ordinary welt sewing machines. The awl *i* swings forward and pierces a hole through the material, returns and then the end staple of the strip of staples is fed forward by the forward sliding motion of sliding bar *b* and knife lever *d*, and the pointed shaft end of the staple is forced into the hole previously pierced by the awl. The end staple thus placed into the material is cut off and severed from the strip by the knife end of lever *d*, the same now forming a resisting anvil against the head of the staple as described above. The clencher *s* then carries out its sideward motion, hereby bending over the projecting point of the staple shaft and finally by means of a further motion toward the inside channel in a vertical plane clenches the bent over staple point tight into the material.

The various instruments return to their original positions and repeat their motions, thus forming the desired staple seam.

Having now described the nature of my invention, what I claim as new and desire to be secured by Letters Patent is:

1. In a machine for uniting layers of material by means of metallic fasteners the combination of an awl, a bender for clenching the point of the fastener, a feeding finger for the work, a slide forming a raceway for the strip composed of the fasteners, a guide for the slide a lever having a cutting end, and pivoted in the slide, a device for displacing the slide and the lever for feeding the fasteners and a device for rocking the lever for cutting off the first fastener.

2. In a machine for uniting layers of material by means of metallic fasteners the combination of an awl, a bender for clenching the point of the fastener, a feeding finger for the work, a slide forming a raceway for the strip composed of the fasteners, a guide for the slide a lever having a cutting end, and pivoted in the slide, a device for displacing the slide and the lever for feeding the fasteners, means for rocking the lever for cutting off the first fastener, and for holding the lever in its position after cutting, the cutting end of the lever constituting an anvil for holding the fastener driven into the material during the operation of the bender.

In witness whereof, I have hereunto signed my name in the presence of two subscribing witnessees.

HERMANN CARL GROS.

Witnesses:
R. H. DUNN,
B. H. WARNER, Jr.