April 14, 1959 E. C. HARRIS 2,881,662

EMERGENCY WARNING SIGN

Filed Sept. 14, 1956

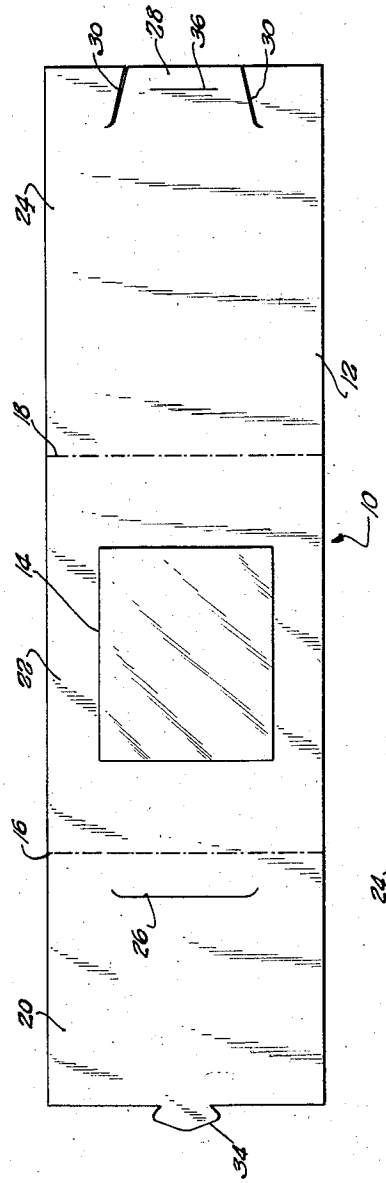


Fig. 1

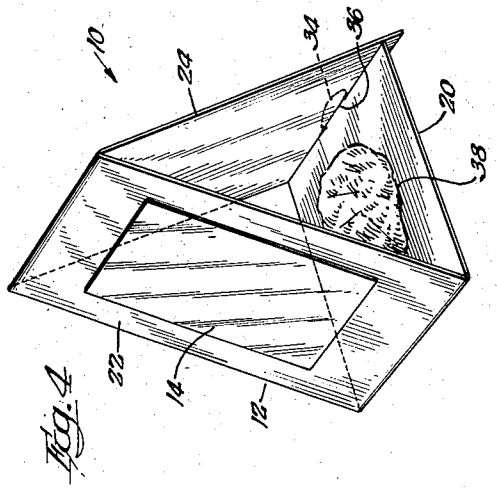


Fig. 4

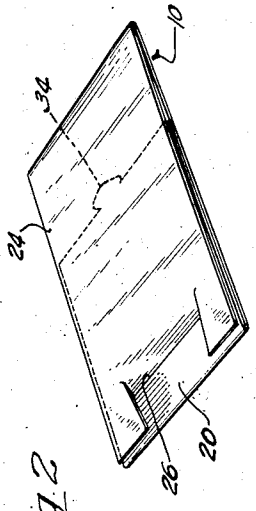


Fig. 2

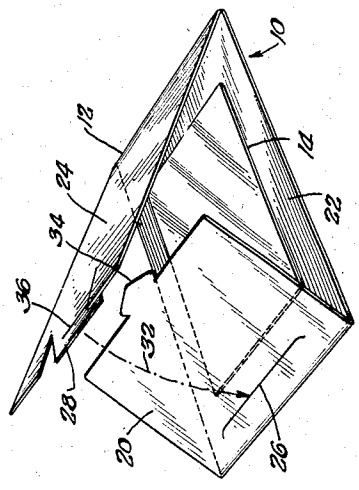


Fig. 3

INVENTOR.
EDWARD C. HARRIS

BY

Fulwider, Mattingly + Huxley
ATTORNEYS.

United States Patent Office

2,881,662

Patented Apr. 14, 1959



2,881,662

# EMERGENCY WARNING SIGN

Edward C. Harris, Woodland Hills, Calif.

Application September 14, 1956, Serial No. 610,008

1 Claim. (Cl. 88—79)

The present invention relates generally to emergency warning signals and particularly to an expendible emergency warning sign that is collapsible for convenient storage until such time as its use is required.

It frequently happens that vehicles become stalled in positions dangerously close to moving traffic. This stalling may be due to engine failure, tire puncture, or the like, but whatever the cause, the disabled vehicle is a hazard to its occupants and to passing traffic. Under these conditions, it is highly desirable to have warning signs strategically placed down the road from the disabled vehicle to warn oncoming traffic of the hazard ahead. It is to be emphasized that the use of a large number of such signs is desirable to give an unmistakable warning, since a single sign of such size as to be conveniently carried in a passenger vehicle can be easily overlooked.

Collapsible signs have heretofore been devised and marketed, but do not have as wide an acceptance among drivers of passenger vehicles as is thought desirable by safety authorities. A single one of the prior devices may not be costly, but if such signs are purchased in sufficient quantity to be useful, they represent an investment that too few drivers are inclined to make for something they hope will never be used. When warning signs are used, they are positioned remotely from the disabled vehicle so that oncoming traffic will be warned in ample time to avoid the hazard. Consequently, the signs are likely to become lost or damaged, even though not intended to be expendible. This factor also weighs against widespread purchase and use of the prior devices. A further disadvantage of the prior devices lies in their bulk. One folded sign can be stored in the glove compartment of a car, but a sufficient number of them cannot.

An object of my invention is to provide an emergency warning sign that is collapsible to a very thin, flat, closed condition whereby a large number of signs can be stored in the glove compartment of a car without interfering with its normal use for storage of other items. The sign is thus conveniently available for immediate use in an emergency, and it is of such construction that it can be quickly opened into a locked, erect position.

Another object of my invention is to provide a sturdy, foldable emergency warning sign that is of such simple and practical construction that it is extremely inexpensive. By virtue of its low cost, the sign is expendible and the free and liberal use of a safe number of the signs is thereby encouraged.

A further object of the invention is to provide a collapsible emergency warning sign having light reflecting means to make is readily visible during darkness when exposed to the headlights of approaching vehicles. The sign is adapted to enclose these means when it is closed whereby damage thereto is prevented during storage of the sign.

These and other objects and advantages of my invention will be apparent from the following description of a presently preferred embodiment thereof and from the annexed drawings illustrating that embodiment in which:



Figure 1 is a plan view of a sign embodying my invention in a flat development thereof;

Figure 2 is a perspective view of the sign shown in Figure 1 in closed condition for storage;

Figure 3 is a perspective view of the sign in partially unfolded condition to show the relationship of its various sections and the method of their connection; and

Figure 4 is a perspective view of the sign in erect position as it appears in use.

In the drawings, the sign is designated generally by the numeral **10**. The sign **10** comprises a body member **12** to which a reflector **14** is affixed. Body **12** is made of a sheet of semi-rigid, foldable material, such as paperboard, and reflector **14** is preferably a paper-backed light-reflecting material fastened to the body by means of an adhesive or the like. However, as is apparent, the light-reflecting material can be applied directly to the body **12**.

Specifically the body **12** is an elongate substantially rectangular member which has two parallel fold lines **16** and **18** extending transversely thereof. The fold lines **16** and **18** can best be seen in Figure 1 wherein it will be observed that they divide body **12** into a small end section or base **20**, a center section **22** and a large end section **24**. The center section **22** and large section **24** are of approximately the same length or area. Centrally located on one surface of center section **22** is the reflector **14** which is a substantially rectangular piece of paper coated with a highly reflective substance such as that commercially available under the name "Scotch Lite." The reflector **14** can also take the form of a warning legend such as the word "Slow."

The closed condition of the sign **10** is shown in Figure 2. It will particularly be noted that the closed sign **10** is extremely flat and thin. Is should also be observed that the reflector **14** is protected by virtue of having the small end section **20** and the large section **24** folded thereover. This compact closed condition of the sign **10** is maintained by means formed integrally with the body **12**.

In the small end section **20** adjacent the fold line **16** there is a transversely extending closing slit **26**. Referring now to Figure 3, it will be seen that the closing slit **26** is adapted to receive a substantially wedge-shaped closing tab **28** that is formed in the outer end of the large end section **24**. The closing tab **28** is defined by a converging pair of cuts **30** that extend to the outer end of the large end section **24**. As Figure 3 clearly demonstrates, the small end section **20** is first folded along the line **16** over the reflector **14** and center section **22**. The large end section **24** is then folded along the line **18** over the small end section **20**. As is shown by the arrow **32**, the closing tab **28** is inserted into the closing slit **26**. Thereafter, the three body sections can be pressed together to assume the compact closed condition shown in Figure 2. It will be noted that in the closed condition, the sign **10** has no projecting portions which are likely to be torn.

The opened or erect position of sign **10** is shown in Figure 4. In the erected position of the sign, the base section **20** and the large end section **24** have been folded away from the closed condition of Figure 2 to the opposite side of the center section **24**, thereby exposing the reflector **14**. The sign **10**, when erected, is of rigid triangular configuration and is stably maintained in this condition by means that are also formed integrally with the body member **12**. As can best be seen in Figure 1, the base section **20** has an integrally formed longitudinally extending continuation thereof which forms a spear tab **34**. The spear tab **34** is adapted for registration with an opening slit **36**. The opening slit **36** is formed in the closing tab **28** by a transversely extending cut. When the spear tab **34** is inserted into the opening slit **36**, the sign can be placed on a ground surface in the manner shown in Figure 4.

Inasmuch as the sign **10** is made of a fairly light material, on windy days it may be desirable to place a convenient weight **38**, such as a stone, loose dirt, etc., on the base **20** in the manner shown in Figure 4, in order to prevent the sign from being blown away. Since sign **10** is preferably made of a semi-rigid material, it will be found that the placement of a weight **38** therein on top of the base **20** will cause downward deflection of the base whereby an appreciable portion of the lower surface of said base will contact the ground. The stability of the sign under windy conditions is thereby greatly enhanced. As examination of Figure 4 will show, the sign **10** can also be placed on either of its sides to surround a weight **38**, or even a post.

As will readily be understood, an emergency calling for the use of sign **10** may arise in either daylight or darkness. Accordingly, it is preferable that the surface of body member **12** which carries reflector **14** be colored with a brilliant hue, such as red, which will attract attention from a long distance. As has already been pointed out, if desired, this entire surface of body member **12** may be coated with a reflector material in lieu of the use of a separate reflector piece **14**. When the sign **10** is folded, this brilliantly colored surface thereof and reflector **14** will be entirely closed and thus prevented from accumulating any dust or dirt which might injure its attention-attracting qualities.

Since the sign **10** is extremely compact and thin, a large number of such signs, for example, a dozen, can easily be banded together with a string or rubber band and placed in the glove compartment of a car where they will be ready for immediate use. When the sign **10** is folded, the other or reverse side thereof, that is to say, the side which is exposed in closed condition, can bear advertising material or a safety message. Due to the extremely inexpensive nature of this construction, the sign **10** is particularly well adapted to be distributed gratis by any advertiser who may have an interest in motor vehicle safety, for example, oil companies, community safety councils, or the like. Directions for erection of these signs may also be imprinted on this reverse surface of body member **12**.

When it is desired to use the sign **10**, it is unfolded in the manner previously described until it assumes the condition shown in Figure 4. The signs **10** are then distributed along the roadway remotely from the disabled vehicle and towards the oncoming traffic with the reflector **14** facing the traffic. Under conditions of darkness, the reflector **14** will reflect light from the headlamps of approaching vehicles.

Since the signs **10** may be obtained by a motorist gratis, or at a very reasonable cost, the widespread use of a number of them is encouraged, whereby ample warning of a stalled vehicle can be given to the oncoming traffic. The use of a large number of signs **10** is particularly important in the daytime. During the daylight hours, the attraction-gaining quality of the signs **10** resides in their brilliant hue alone, and therefore it becomes particularly important to distribute a large number of these signs in full view of the oncoming traffic.



While there has been shown herein what is considered to be the preferred embodiment of the present invention, it will be apparent that various modifications and changes may be made with respect to the foregoing description without departing from the spirit of the invention or the scope of the following claim.

I claim:

A warning sign comprising: a unitary body member that is made of a substantially rectangular sheet of a semi-rigid, foldable material having a rectangular center section, a rectangular end section of the same size as said center section, and a smaller rectangular end section, said sections being defined by a pair of parallel fold lines formed in the material of said body and extending transversely thereof, said smaller section at its free end being formed with an integral spear tab comprising a longitudinally central continuation of said smaller section, and a transversely-extending opening slit being formed in said larger section adjacent the free end thereof, said spear tab being insertable into said opening slit when said end sections are folded to the same side of said center section to maintain said sign in opened condition, the larger of said end sections being formed with a pair of generally longitudinally extending cuts adjacent opposite ends of said opening slit and convergingly opening into the free end of said larger section to define a wedge-like closing tab in which said opening slit is disposed flanked by adjacent free end portions of said larger section, said smaller section having a transverse closing slit formed therein adjacent one of said fold lines whereby the portion of said smaller section included between said one fold line and said closing slit is embraced between said closing tab and said flanking free end portions of said larger section when said closing tab is inserted into said closing slit whereby to maintain said sign in closed condition; and light reflecting means on said center section.


**References Cited** in the file of this patent

UNITED STATES PATENTS

| | | |
|---|---|---|
| 666,941 | Streit | Jan. 29, 1901 |
| 1,411,022 | Heindenreich | Mar. 28, 1922 |
| 1,629,670 | Malme | May 24, 1927 |
| 2,090,157 | Smith | Aug. 17, 1937 |
| 2,443,234 | Ford | June 15, 1948 |
| 2,630,641 | Hessdoerfer | Mar. 10, 1953 |
| 2,702,955 | Oliver | Mar. 1, 1955 |

FOREIGN PATENTS

| | | |
|---|---|---|
| 141,677 | Australia | June 19, 1951 |