(No Model.)

3 Sheets—Sheet 1.

J. R. REYNOLDS.

BOOK SEWING MACHINE.

No. 378,461. Patented Feb. 28, 1888.

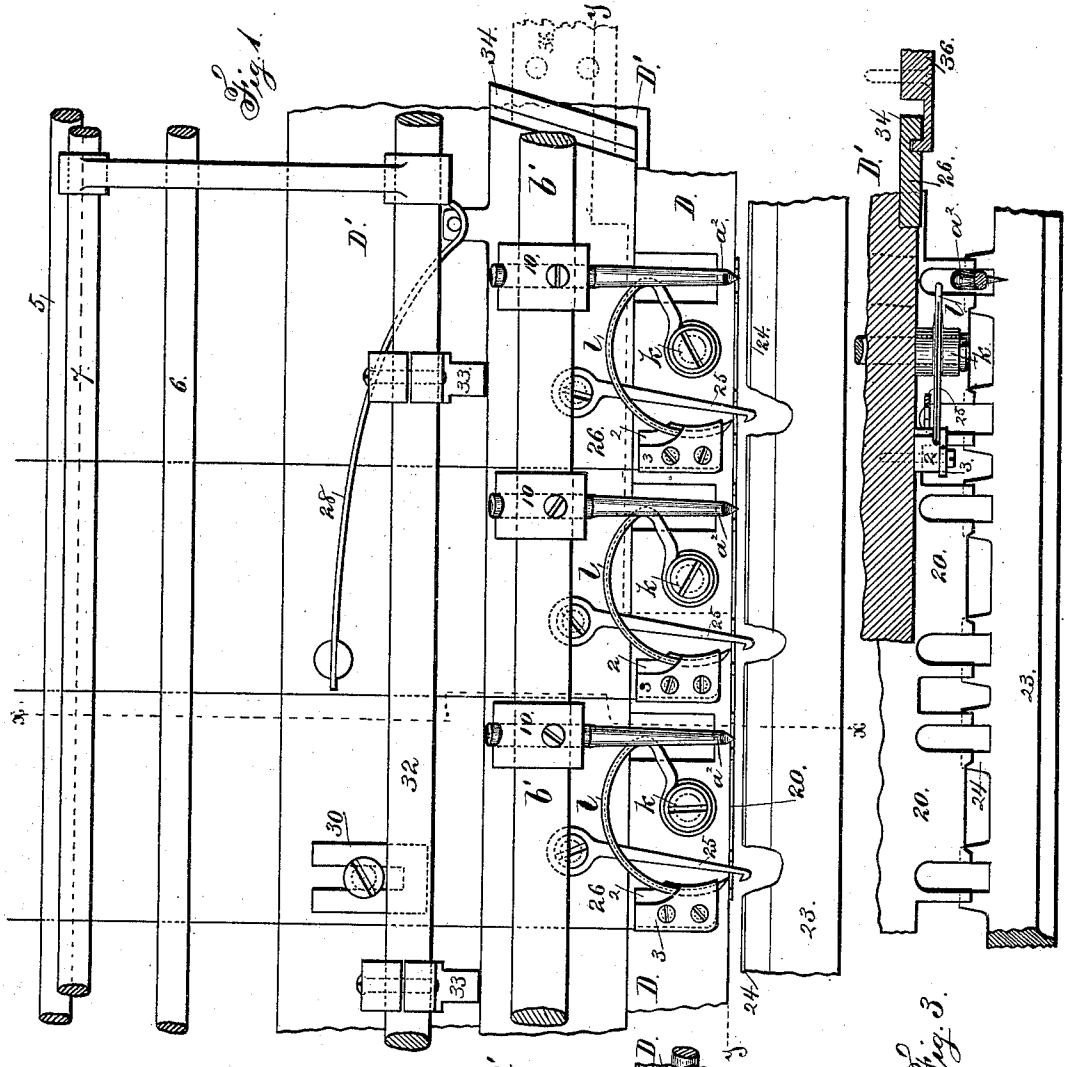

Fig. 1.

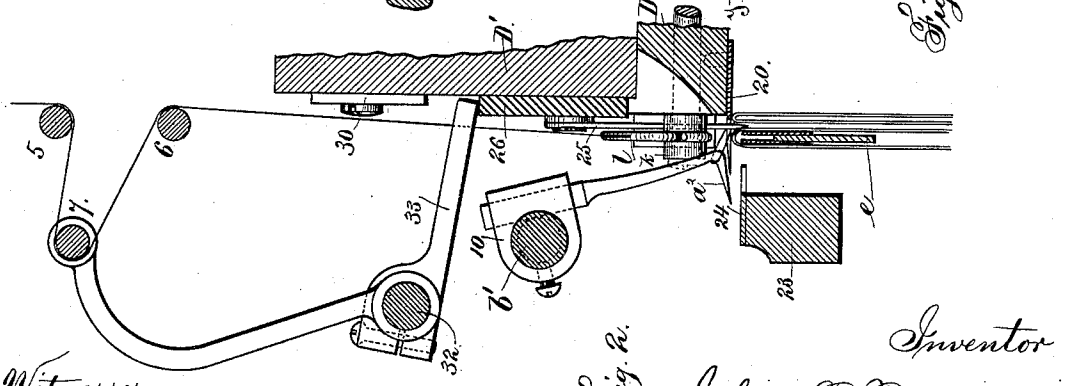

Fig. 2.

Fig. 3.

Witnesses
Harold Serrell
Chas. H. Smith

Inventor
per John R. Reynolds.
Lemuel W. Serrell
atty.

N. PETERS, Photo-Lithographer, Washington, D. C.

(No Model.)

3 Sheets—Sheet 2.

J. R. REYNOLDS.

BOOK SEWING MACHINE.

No. 378,461. Patented Feb. 28, 1888.

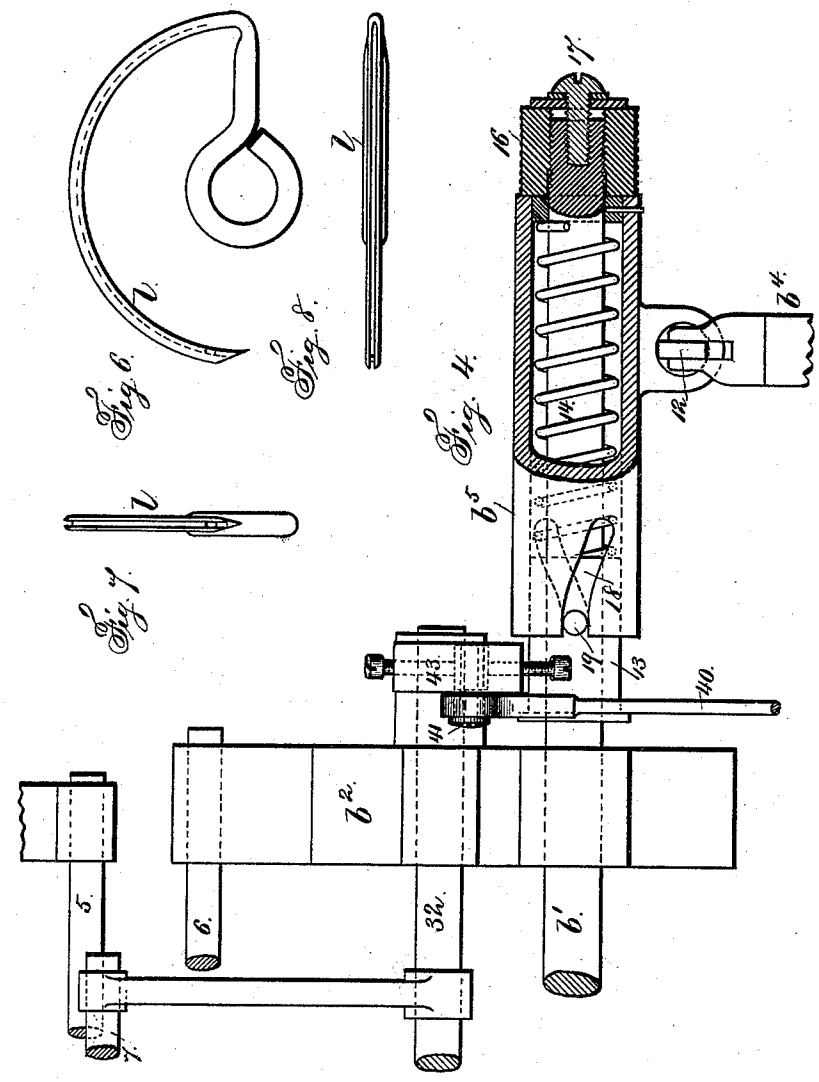

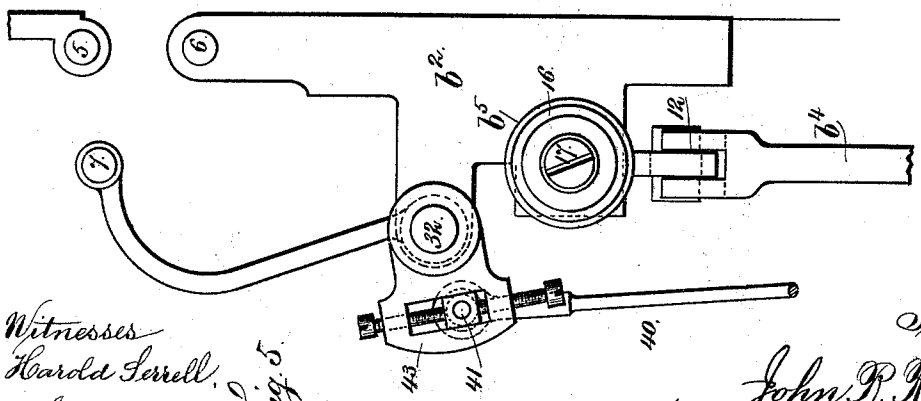

Witnesses
Harold Serrell.
Chas. H. Smith.

Fig. 5.

Inventor
per John R. Reynolds
Lemuel W. Serrell
Att'y

N. PETERS, Photo-Lithographer, Washington, D. C.

(No Model.) 3 Sheets—Sheet 3.

J. R. REYNOLDS.

BOOK SEWING MACHINE.

No. 378,461. Patented Feb. 28, 1888.

Fig. 10.

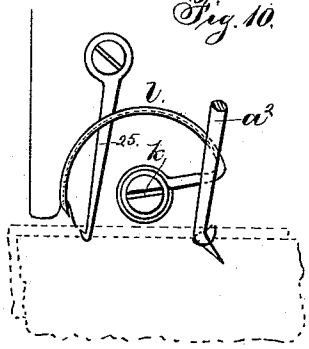

Fig. 11.

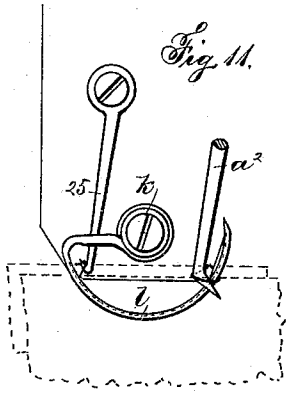

Fig. 12.

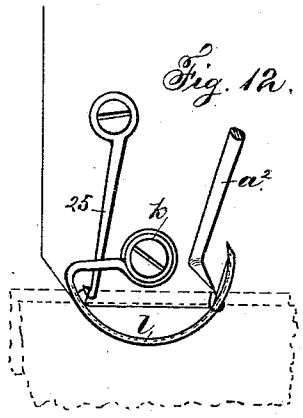

Fig. 13.

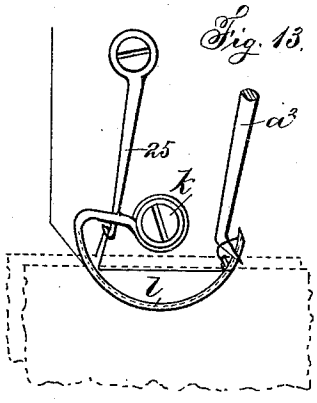

Fig. 14

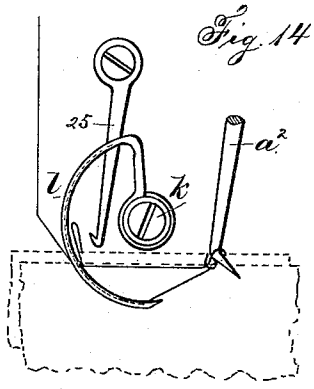

Fig. 15.

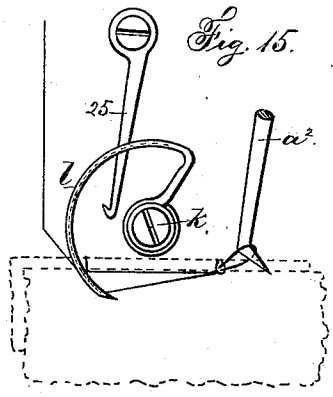

Fig. 9.

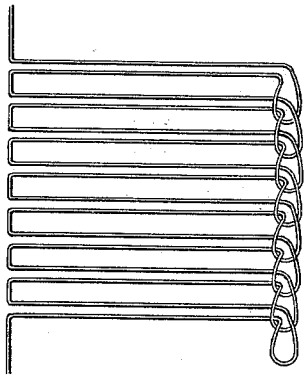

Witnesses—
Harold Ferrell.
Chas. A. Smith.

Inventor
per John R. Reynolds.
Lemuel W. Ferrell.
atty.

N. PETERS, Photo-Lithographer, Washington, D. C.

UNITED STATES PATENT OFFICE.

JOHN R. REYNOLDS, OF HARTFORD, CONNECTICUT, ASSIGNOR TO THE SMYTH MANUFACTURING COMPANY, OF SAME PLACE.

BOOK-SEWING MACHINE.

SPECIFICATION forming part of Letters Patent No. 378,461, dated February 28, 1888.

Application filed August 14, 1886. Serial No. 210,898. (No model.)

To all whom it may concern:

Be it known that I, JOHN R. REYNOLDS, of Hartford, in the county of Hartford and State of Connecticut, have invented an Improvement in Machinery for Sewing Books, of which the following is a specification.

This invention relates to an improvement upon the book-sewing device shown in D. M. Smyth's patents, Nos. 338,000 and 220,312.

In the said Patent No. 220,312 the threads are carried through the signatures by semicircular needles, and the loop that is left in one signature receives through it the point of the needle and the loop of thread in the next signature; but there is of necessity considerable slack thread in forming the respective loops, and it is found that the threads have considerable friction upon them in consequence of passing over the edges of the paper at the perforations, and hence it is difficult to pull up the preceding loops by the movements of the needle itself. In the Patent No. 338,000 the threads from each needle form ranges of loops, but there is too much slack thread.

In the drawings, Figure 1 is an elevation of three of the needles and the devices used in connection with the same. Fig. 2 is a section vertically at the line *x x*, Fig. 1. Fig. 3 is a plan view at the line *y y*, Fig. 1. Fig. 4 is an elevation of the devices for moving the looper-shaft. Fig. 5 is an end view of the same. Figs. 6, 7, and 8 represent the needle in larger size. Fig. 9 is a skeleton showing the looping of the threads. Figs. 10, 11, 12, 13, 14, and 15 are diagrams of the needle and loopers in the different positions.

Upon reference to the aforesaid Patent No. 220,312 it will be found that the folded sheets or signatures are placed upon arms and brought around successively and present the sheets or signatures to the sewing mechanism. One of these arms is represented sectionally at *e*, Fig. 2.

The needles *l* are semicircular, or nearly so, as seen in Figs. 6, 7, 8, and the eye of each needle is near the end, and each needle is attached upon the end of a shaft by a screw *k*, as in aforesaid patent, and to its shaft the proper movement is given at the right time for passing the needle into and out of the signatures.

I find it advantageous to groove these semicircular needles upon the outer periphery, from the shank to the point, in order that the threads may lie in such groove as the needle passes through the paper, thereby lessening the wear upon the thread and the tendency of the paper to cut the thread. To guide the needle in its downward movement, I make use of a grooved block, 2, fastened upon the frame D, above the folded edge of the signature, and there is a plate or cap, 3, that retains the needle in its place; but the needle is unobstructed as it slides through the guide. Upon reference to Fig. 1 it will be seen that the thread to each needle passes around the guide-bars 5 and 6, and also around the take-up bar 7, and from the guide-bar 6 the thread passes down around the guide-block 2 and through the eye of the needle, and thence to the previously-sewed signature. As the needle swings back its point rises into the groove in the guide-block 2; hence the thread lies within the groove of the needle, between the eye and the point, and the groove of the needle prevents the thread being pinched and injured by contact with the needle and the block 2.

Upon reference to Fig. 1 it will be seen that all the needles *l* swing in the same direction, and they are to be operated simultaneously, so that a signature will be sewed with as many ranges of loops as there are needles that operate in sewing the same. Fig. 9 indicates the stitch that is made in this machine—that is to say, each line of sewing is made by one thread, the thread being passed as a loop into the signature at one place and out at another place, and the second loop of thread passes through the end of the first loop, and so on. This stitch is the same as that shown in the Patent No. 338,000; but in this patent the needles work in opposite directions.

In the aforesaid Patent No. 220,312 each looper A^2 is shown as passing through the loop of thread and holding the same open for another needle to pass through the same as its point rises out of the signature, and such looper is drawn back and drops its loop and goes forward again, taking a loop of thread at the eye of the needle; but the looper acted in connection with two needles working in opposite directions.

In my present invention there is one looper to each needle, and there are usually as many

needles in the machine as are required for the largest sizes of signatures and the strongest binding, and when sewing smaller signatures some of the needles are not in use. The looper-shaft b' is supported near each end in frames. The frame b^2 at one end is shown in Figs. 4 and 5. Each looper is connected to the shaft b' by a collar, 10, and clamp-screw, there being preferably peripheral grooves in the shaft b' at the proper places for the loopers, and the cylindrical shank of the looper passes through the clamp-collar and partially into the groove, and the parts are held firmly by the screw that tightens the collar upon the shaft also binding the shank of the looper. The shaft b' can slide freely endwise through its bearings in the frames b^2, as well as revolve therein, and to give to such shaft the necessary oscillating motion and endwise motion to properly move the loopers, I make use of the lever b^4, that receives the proper movement by a cam, and it is connected at its upper end by a hinge, 12, to the sleeve b^5, that surrounds the looper-bar b' where it projects outside the frame b^2. There is a collar, 13, around the looper-bar b' and within the sleeve b^5, and a helical spring, 14, surrounds the looper-bar between the collar 13 and an inward flange at the end of the sleeve, and a collar or nut, 16, surrounding the looper-shaft, is adjusted by screwing it endwise upon said shaft, and there is a screw, 17, for clamping said nut 16, and the sleeve b^5 is slotted at 18 diagonally, and the pin 19 in such slot passes through the collar 13. It is preferable to have diagonal slots at each side of the sleeve. The operation of this part is that when the sleeve b^5 is pressed toward the frame b^2 the looper-shaft is slipped endwise by the pressure of the flange of the sleeve against the spring, and when the collar reaches the side of the frame b^2 the further end movement of the looper-shaft is arrested, but the sleeve is moved farther in the same direction, and the inclined slot 18 and pin 19 give to the looper-bar a partial rotation. Upon the lever b^4 moving in the other direction the first operation is to give the looper-bar a partial rotation the reverse way as the inclined slot 18 moves back on the pin 19, and then the further movement draws the looper-bar endwise by the end of the sleeve taking against the collar 16, and this collar being adjustable, the position of the looper-bar endwise, and consequently of the loopers, can be regulated.

The relative motions given to each needle and its looper will be understood by reference to Figs. 10 to 15. Fig. 10 shows the needle about to enter the signature, and the looper a^2 as holding the previous loop, ready for the needle to pass into the position of Fig. 11 and go through the first loop. Then the partial rotation of the looper-shaft carries the looper back and drops the first loop around the needles, as in Fig. 12. Then the looper swings forward again, taking a loop of thread from the needle, as in Fig. 13, as the needle draws back to the position shown in Fig. 14, leaving a second loop or thread on the looper with the first loop of thread around it. The second loop is spread by the lateral movement of the loop, as in Fig. 15, and then the looper is carried back laterally to the position in Fig. 10, with the loop spread for the stitch through the next signature, the end motion of the looper-bar carrying the looper laterally from the position of Fig. 15 to that of Fig. 10, and the partial revolution of the looper-bar swinging the looper from the positions of Figs. 10 and 11 back to that of Fig. 12 and forward to that of Figs. 13 and 14. In these motions the threads are looped as shown in the skeleton, Fig. 9, the double threads passing along in the signatures, and the loop at the end in one signature receiving through it the threads of the loop in the next signature. These operations cannot be performed in book-sewing advantageously without the production of more or less slack thread.

One feature of my improvement is for taking up the slack thread. Another feature is to prevent the tension on the threads tearing or injuring the paper. Another feature is to hold the sewed signatures back out of the way of the fresh and unsewed signature. These features are next described.

Upon the under side of the frame D, that carries the needle-shafts, I place a notched plate, 20, that projects in the front of said frame, and it has notches at the places where the loopers are located and the semicircular needles pass down and their points rise up, so as not to obstruct the action of the needles or of the loopers that act with them, and the signature upon the arm *e*. is raised up beneath such plate and held there during the sewing operation, and when the threads are pulled up the paper cannot be torn, because the metal plate supports the same.

The bar 23 is provided with a plate, 24, on the top that projects toward and beneath the plate 20, and its edge is notched in a corresponding manner, so as not to interfere with the sewing, and after the signature has been sewed and the arm *e* drops down out of the same the bar 23 is to be brought up, and the edge of the plate 24 presses the signatures back out of the way of the next signature as it is brought up to place by the arm e' to be sewed.

The loop-tighteners 25 are in the form of downwardly-projecting fingers with hooks on their lower ends. These tighteners are fastened upon the bar 26, that lies above the frame D, against the plate or frame D', and this bar 26 is suspended by the springs 28, and its upward movement is limited by the adjustable stop 30.

The rock-shaft 32 is supported in bearings upon the frame, and there are arms that carry the take-up bar 7, and also arms 33, that act upon the top edge of the bar 26 to force it down, and at the end of the bar 26 there are inclined lips 34, that are within similarly-shaped stationary guides 36 upon the frame D'; hence as the bar 26 is pressed down a slight end motion is given to it. The rock-shaft 32

receives its motion at the proper time by a cam that acts upon the rod 40, that passes to the adjustable crank-pin 41 in the arm 43, and the parts are timed so that the bar 26 is forced down directly after the sewed signature has been passed back, so that the lower ends of the loop-tighteners pass through the notches of the plates and outside the face of the sewed sheet, and the plate 24 holds the signatures back in place until a fresh signature is brought up to be sewed, and the tighteners 25 remain in that position until the sewing-needles have passed into the signature. The positions of these parts are such that the threads draw from one signature to the next directly over the hooks of the tighteners, and as the stitch is taken, as indicated in Figs. 11, 12, and 13, the tighteners are raised by the springs 28 and catch the threads and draw them up, thereby tightening the previous loop around the needle, as in Fig. 13; but before the needles draw out of the signature the bar 26 is slightly depressed again, and the loops, by their elasticity, spring off the tighteners, as indicated in Fig. 14, and the slack thread is drawn up by the endwise movement of the shaft, looper, and other parts as the needle draws back to the position shown in Fig. 15, thereby insuring the proper tightening up of the stitches in each signature as the same is sewed.

The grooves in the periphery of each semicircular needle extending past the eye and to the base of the point receive the thread when the eye of the needle is raised above the bottom of the guide-block 2, thereby preventing the thread being clamped or worn against the guide-block.

I claim as my invention—

1. The combination, in a book-sewing machine, of a range of semicircular needles, all standing in the same direction and moving simultaneously to carry the threads through the signatures, loopers to hold the threads as the needles draw back and to present the loops to the same needles from which the threads were drawn after such needles have passed through the next signature, and means for operating the said needles and loopers, thereby uniting the signatures by the ranges of interlooped threads, substantially as set forth.

2. The combination, in a book-sewing machine, of semicircular needles, shafts for holding and oscillating such needles, loopers for taking loops from the needles as the points emerge from the signatures, and means, substantially as specified, for moving the loopers to present the loops to the same needles at the next stitch, and loop-tighteners and mechanism for moving the same and drawing up the respective stitches, substantially as set forth.

3. The combination, with the loopers and looper-shaft, of a sleeve with inclined slots, a cross-pin and collar, a spring between the sleeve and the looper-shaft, and stops to limit the end movement given to the looper-shaft, whereby the looper-shaft is turned and the loopers swung by a continuation of the end movement given to the sleeve, substantially as set forth.

4. The combination, with the semicircular needles and the shafts for the same, of the loopers and the notched plate 20, projecting from the under side of the bar D and against which the fold of the signature rests while the sewing is performed, substantially as set forth.

5. The combination, in a book-sewing machine, of the semicircular needles and their shafts, the loopers and looper-shaft, the arms for holding the signature while being sewed, the notched plate 20, against which the signature is held, and the bar for pushing the signatures back, and the loop-tighteners that pass in between the sewed signature and the signature that is presented for sewing, substantially as set forth.

6. The semicircular or nearly semicircular needle having a groove upon its periphery extending from the shank to the point, and an eye through the needle near the point and opening into the groove, in combination with the grooved guide-block 2, substantially as set forth.

Signed by me this 3d day of August, A. D. 1886.

JOHN R. REYNOLDS.

Witnesses:
W. B. McCRAY,
CHAS. E. PARKER.