(12) UK Patent Application (19) GB (11) 2 216 331 (13) A

(43) Date of A publication 04.10.1989

(21) Application No 8902990.4

(22) Date of filing 10.02.1989

(30) Priority data
(31) 6340195 (32) 23.02.1988 (33) JP

(71) Applicant
Jeol Ltd

(Incorporated in Japan)

1-2, Musashino 3 chome, Akishima, Tokyo, Japan

(72) Inventor
Hisashi Matsuda

(74) Agent and/or Address for Service
Boult Wade & Tennant
27 Furnival Street, London, EC4A 1PQ,
United Kingdom

(51) INT CL⁴
H01J 49/32

(52) UK CL (Edition J)
H1D DM D21B D21C D2ID

(56) Documents cited
None

(58) Field of search
UK CL (Edition J) H1D DM
INT CL⁴ H01J 49/30 49/32

(54) Instrument for mass spectrometry/mass spectrometry

(57) A double focus mass spectrometer used as the second mass analyser of a MS/MS instrument has a uniform electric field into which fragment ions produced by dissociation of precursor ions of a certain ionic species are introduced. The fragment ions travel along parabolic orbits and are separated according to energy, and the separated fragment ions are introduced into a magnetic sector 6 wherein they are dispersed according to mass and impinge on a two-dimensional ion detector 7, disposed along a focal plane of the magnetic sector in order to simultaneously detect said fragment ions and to obtain a spectrum of the fragment ions. The use of the uniform electric field 4 allows fragment ions having a wide range of energies to pass through the electric field simultaneously. If the exit boundary of the sector 6 lies on a straight line through the ion injection point into the electric field 4, the focal plane of the magnetic sector for different masses also lies on a straight line through the injection point. The mass scale on the focal plane is linear. The electric field 4 and magnetic sector 6 may abut one another (as shown) or there may be a field - free space between them.

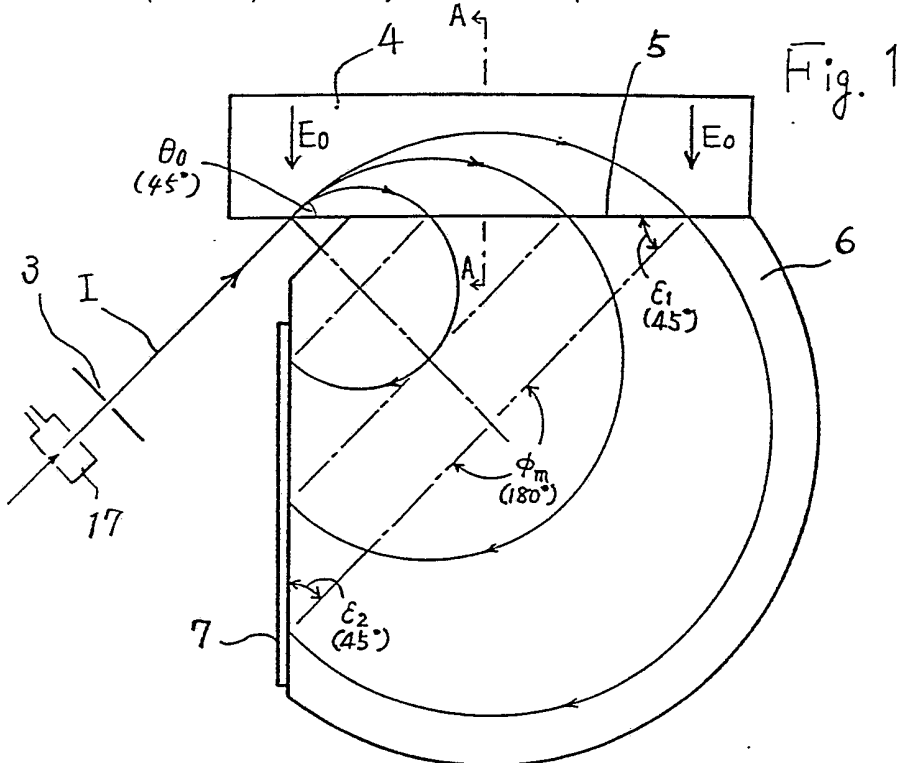

Fig. 1

GB 2 216 331 A

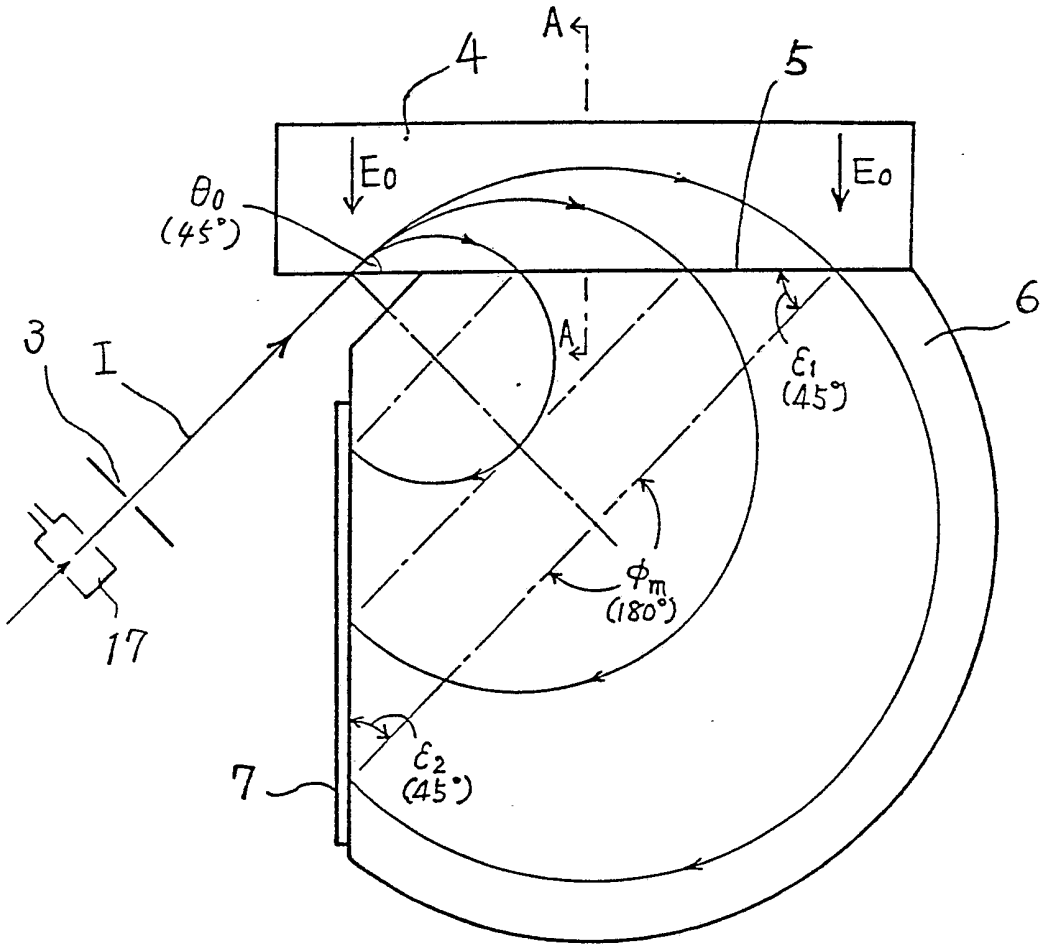

Fig. 1

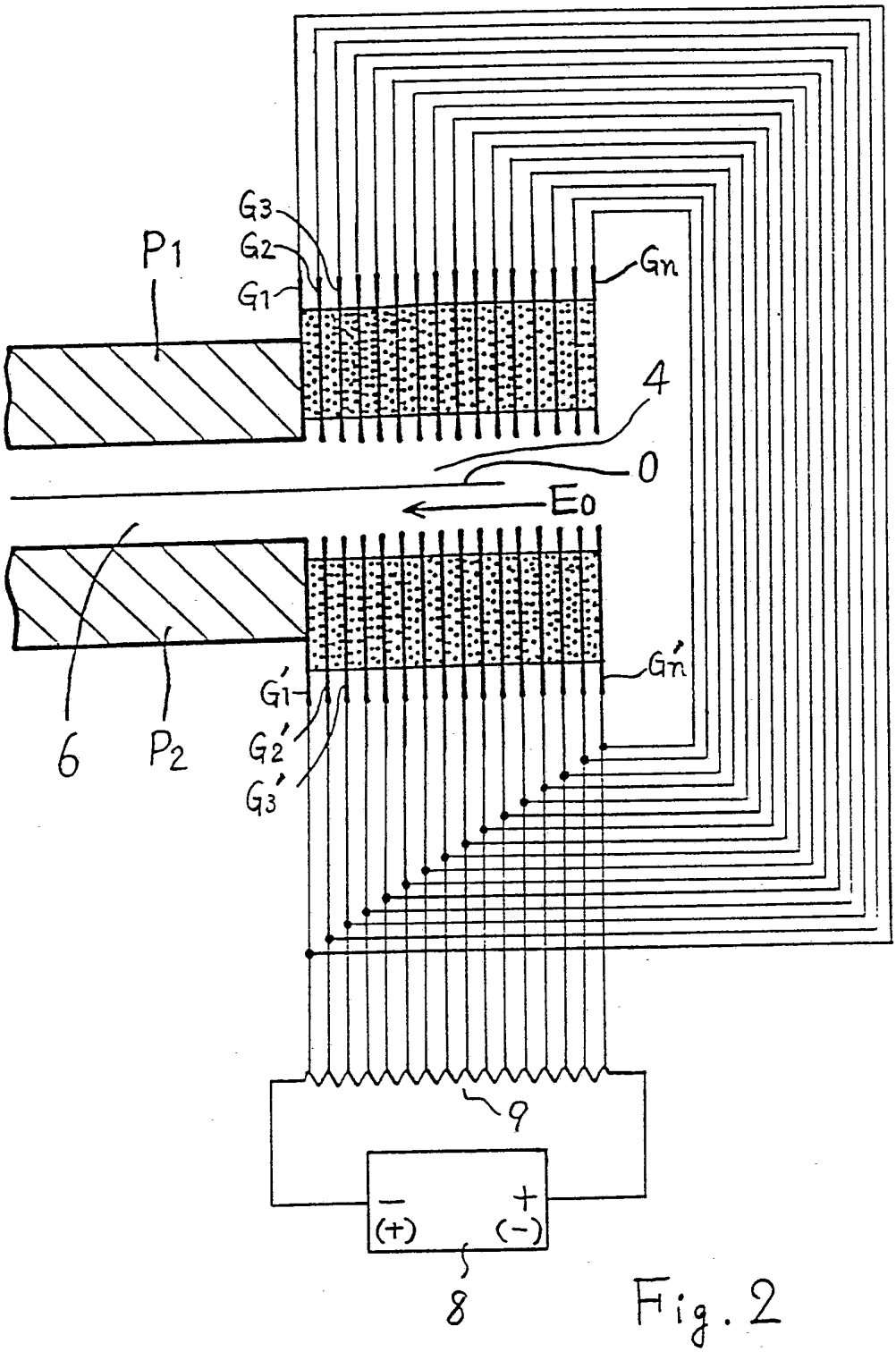

Fig. 2

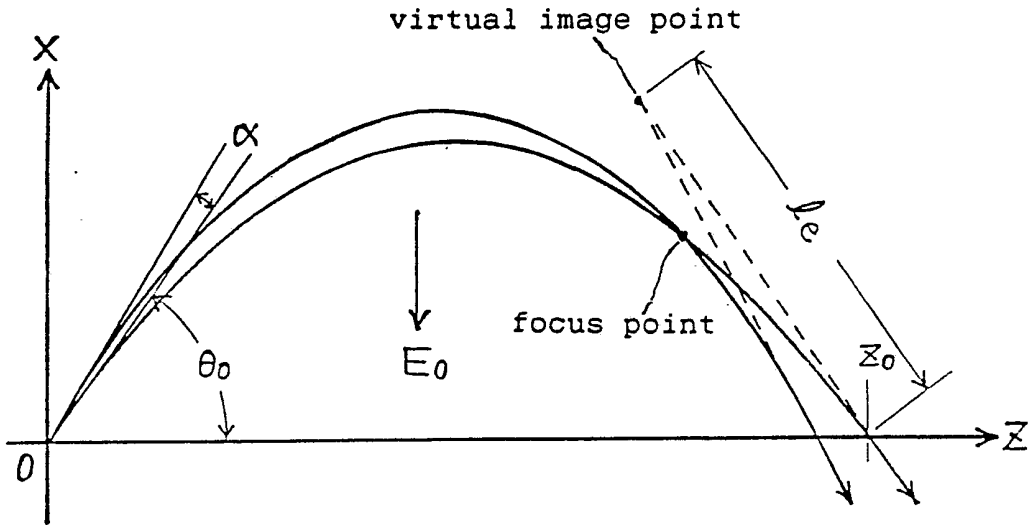

Fig. 3

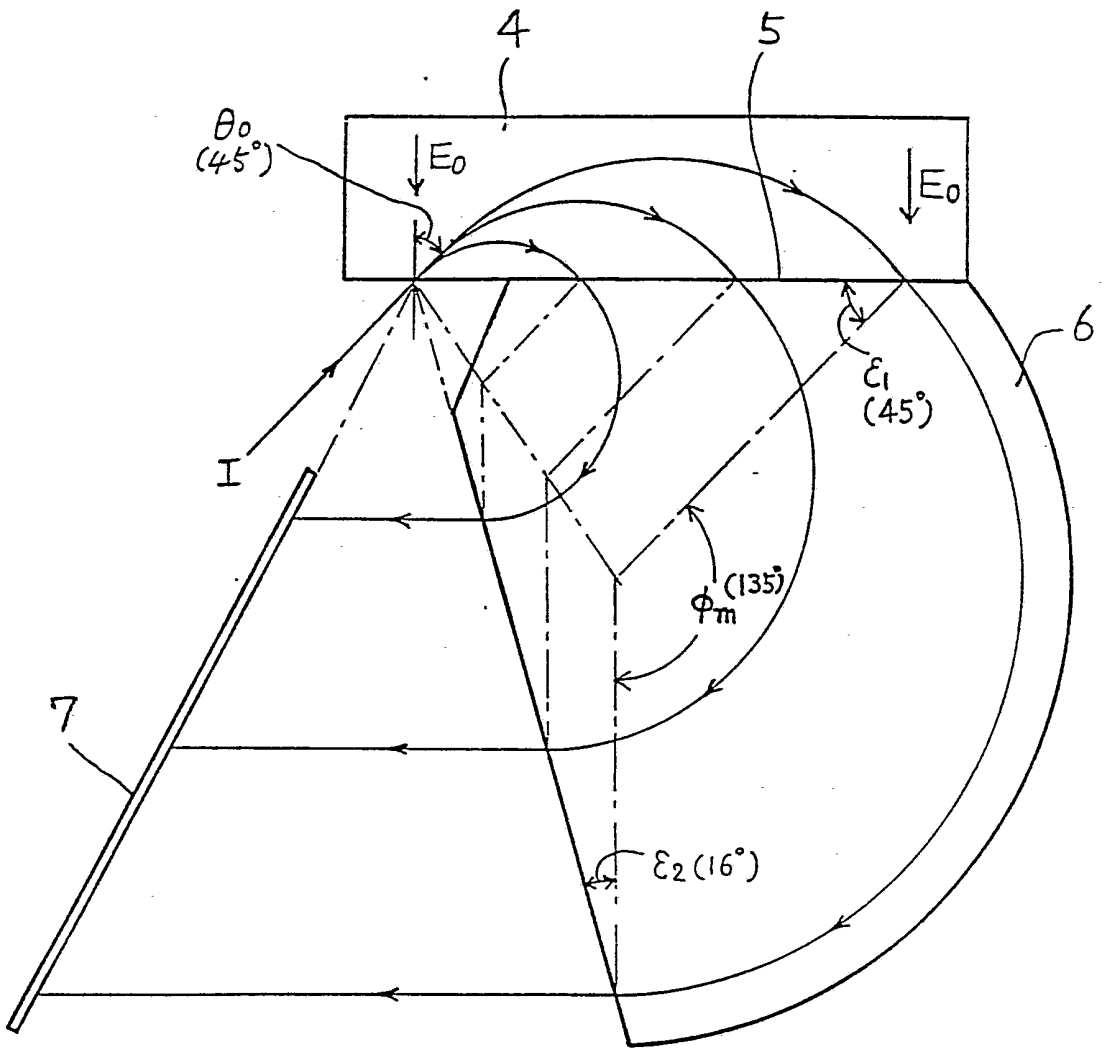
4
5
θ_0 (45°)
E_0
E_0
6
ε_1 (45°)
I
ϕ_m (135°)
7
ε_2 (16°)

Fig. 4

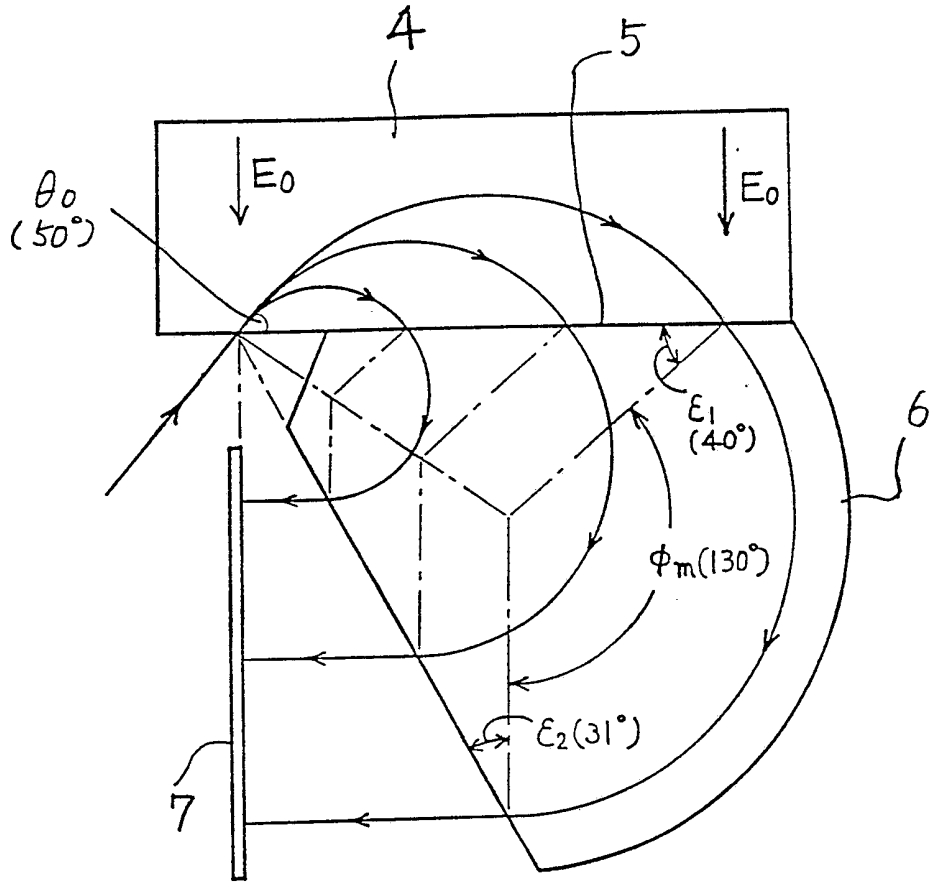

Fig. 5

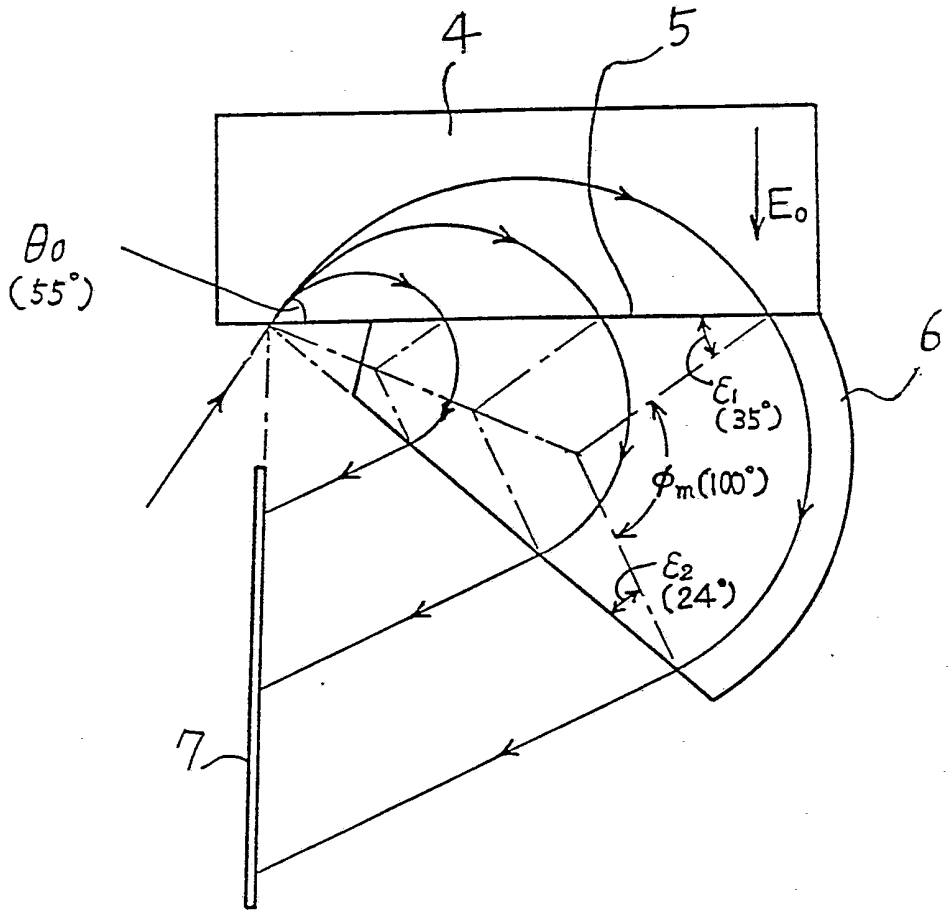

Fig. 6

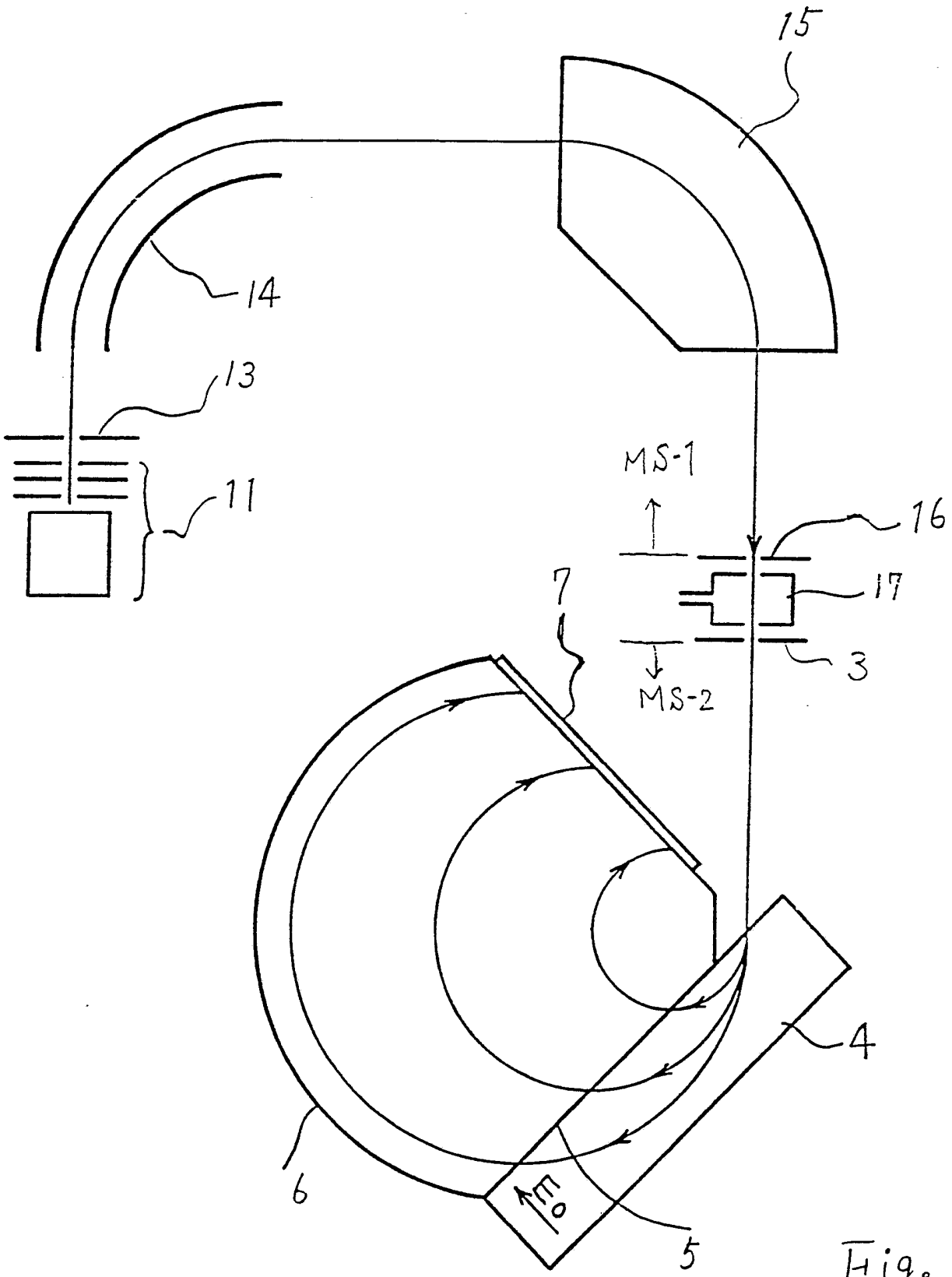

Fig. 7

INSTRUMENT FOR MASS SPECTROMETRY/MASS SPECTROMETER

BACKGROUND OF THE INVENTION

The present invention relates to an instrument for mass spectrometry/mass spectrometry (MS/MS), and more specifically, relates to a MS/MS instrument utilizing a double focusing mass analyser as the second mass analyser, said analyser having a uniform electric field and a magnetic sector.

The MS/MS method is a powerful technique to achieve structural characterisation of complex organic compounds. In the MS/MS method, two mass analysers are arranged in tandem and a chamber for collision induced dissociation is inserted between the mass analysers. Precursor ions selected by the first mass analyser dissociate into fragment ions in the chamber and the resulting fragment ions are analysed by the second mass analyser.

When precursor ions dissociate into fragment ions, it is thought that all of the fragment ions travel at the same velocity as the precursor ions. For this reason, the energy of the fragment ions lie in a wide range from the energy of the precursor to zero corresponding to their masses.

Heretofore, various mass analysers, such as a quadrupole analyser, electric sector, magnetic sector, etc., are used as the second mass analyser of the MS/MS instrument, however, to obtain mass spectra of fragment ions with high resolution, it is required to use a double focusing mass analyser as the second mass analyser. When a conventional Nier-Johnson type