Aug. 5, 1947. R. L. SNYDER, JR 2,425,131

ELECTRONIC COMPUTING CIRCUIT

Filed Jan. 29, 1945

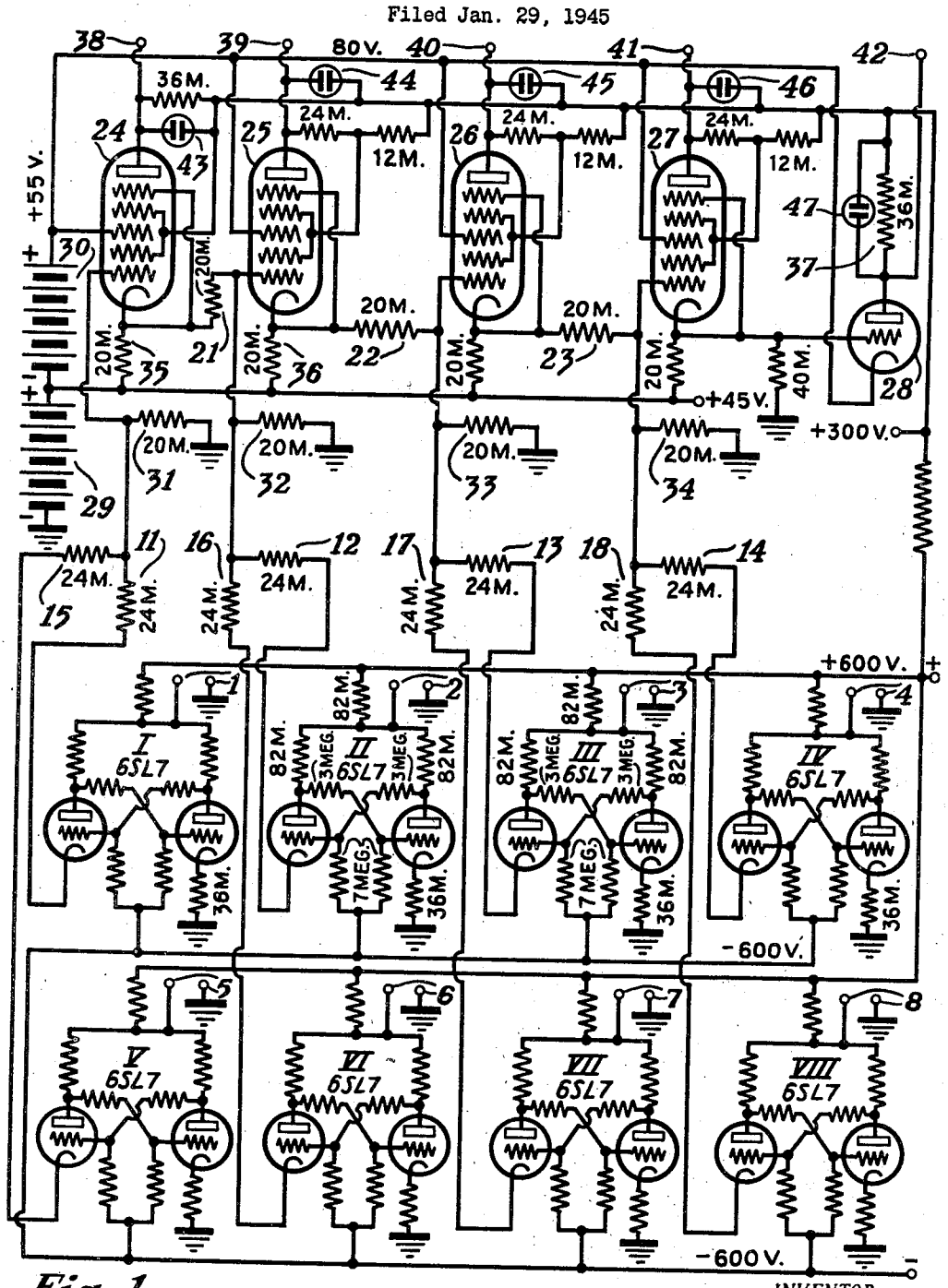

Fig. 1

INVENTOR.

Richard L. Snyder, Jr.

BY

C. D. Puska

ATTORNEY.

Patented Aug. 5, 1947

2,425,131

UNITED STATES PATENT OFFICE

2,425,131

ELECTRONIC COMPUTING CIRCUIT

Richard L. Snyder, Jr., Princeton, N. J., assignor to Radio Corporation of America, a corporation of Delaware

Application January 29, 1945, Serial No. 575,124

6 Claims. (Cl. 235—61)

1

This invention relates generally to electronic computers and particularly to a circuit for deriving voltages the amplitudes of which correspond to the values of the individual binary terms of the sum of at least two quantities wherein the quantities are represented by applied voltages characteristic of the values of each binary term thereof.

The present application is a continuation-in-part of an application Serial No. 473,408, filed January 23, 1943.

The binary system of computation is particularly adaptable to electronic computation, since the values of binary terms may be represented by the conducting or non-conducting condition of an electrical circuit. The binary system of computation is described in "Elementary Number Theory" by Uspenski and Heaslet. Multivibrators, or trigger circuits, of the type generally described in "Theory and Application of Vacuum Tubes" by Herbert J. Reich are particularly useful in this field.

The operation of typical trigger circuits when utilized as components of electronic computing circuits is described in considerable detail in the copending application of George A. Morton and Leslie E. Flory, Ser. No. 473,146, filed Jan. 21, 1943. In adding two binary numbers, a particular digit in the sum will be either binary 1 or binary 0, and the amount to be carried to the next succeeding place will be either binary 1 or binary 0. A binary 1 term will appear in the sum only if one of the added digits is binary 1 and the other binary 0, and nothing is carried from the preceding place; or if both added digits are binary 0 and binary 1 has been carried from the preceding place; or if both added digits are binary 1 and binary 1 has been carried from the preceding place. In all other instances, the particular digit in the sum will be binary 0. Similarly, a binary 1 carryover is necessary when any two or three binary 1 terms, or carryovers from preceding digits, occur in any one place.

The instant invention employs a novel arrangement of a plurality of cascaded thermionic tubes each having a plurality of control electrodes, in a circuit which provides output potentials which may be utilized to indicate the successive binary terms in the sum of two binary numbers. The circuit also provides carryover potentials required for the next succeeding place when any two or three binary 1 terms coincide in any one place. One multielectrode tube is required for each place in the binary sum.

While trigger circuits are disclosed herein for

2

deriving input voltages representing each term of the binary numbers to be added, it should be understood that any other sources of voltage which represent the values of the binary terms of these quantities may be employed. The voltages representing corresponding terms of the two binary quantities to be added are applied additively, through suitable isolating networks, to the first control electrode of each corresponding one of the thermionic tubes having a plurality of control electrodes. These applied voltages cause the multi-electrode tube to be conductive, thereby raising the cathode potential, and decreasing the anode potential thereon. When two or more of such applied voltages coincide on the first control electrode, the cathode potential is raised sufficiently to provide a carryover control potential which is applied to the first control electrode of the next succeeding cascaded multi-electrode tube. The cathode is normally maintained at a predetermined positive potential 45 v. The second control electrode is maintained at a slightly higher positive potential 55 v. than the cathode. Applicants' copending application, Serial No. 452,820, filed July 30, 1942, discloses amplifying and oscillation circuits having similar operating conditions.

Among the objects of the invention are to provide an improved method of and means for deriving the sum of the amplitudes of at least two or more applied voltages. Another object is to provide an improved method of and means for deriving voltages, the amplitudes of which are representative of the binary values of the individual terms of the sum of two quantities, which are applied to the circuit in terms of other voltages of amplitudes characteristic of the binary values of individual terms of each of the quantities. Still another object is to provide an improved method of and means for deriving the binary sum of two quantities, which comprises a plurality of cascaded multi-control electrode thermionic tubes in which each tube provides an indication of the value of a particular binary term of a sum, and also provides a potential characteristic of a carryover quantity to be applied to the next succeeding term.

The invention will be described by reference to the accompanying drawing of which the single figure is a schematic circuit diagram of one embodiment thereof.

Referring to the drawing, a first group of trigger circuits I, II, III, and IV include input circuits 1, 2, 3 and 4, respectively. These trigger circuits are of the conventional type described in

the copending Morton and Flory application mentioned heretofore, wherein voltages, or voltage pulses, applied to the symmetrical point in the anode circuits of each of the trigger tubes of each trigger circuit provide a change in polarization of that trigger circuit. This group of trigger circuits represents four binary terms of one of the quantities to be added. A second group of trigger circuits V, VI, VII, VIII include input circuits 5, 6, 7 and 8, respectively. These trigger circuits are of the same general type as the first group of trigger circuits. The cathode of the first tube of trigger circuit I is connected through an isolating resistor 11 and a bias resistor 31 to a source of reference potential, such as ground. The cathode of the first tube of trigger circuit V is connected through a second isolating resistor 15, which is also connected through the bias resistor 31 to ground. Similarly, the cathode of the first tube of trigger circuit II is connected through a third isolating resistor 12 and a second bias resistor 32 to ground. The cathode of the first tube of trigger circuit VI is connected through a fourth isolating resistor 16 and through the second bias resistor 32 to ground.

The cathode of the first tube of trigger circuit III and the cathode of the first tube of trigger circuit VII are also connected through fifth and sixth isolating resistors 13 and 17, respectively, and through a third bias resistor 33 to ground. The cathode of the first tube of trigger circuit IV and cathode of the first tube of trigger circuit VIII are similarly connected through seventh and eighth isolating resistors 14 and 18, respectively, and through a fourth bias resistor 34 to ground.

The ungrounded terminal of the first bias resistor 31 is connected to the first control electrode of a first multi-electrode tube 24, which includes a plurality of control electrodes, such as a pentagrid tube of the RCA 6L7 type. The cathode of the first pentagrid tube 24 is connected through a first cathode resistor 35 to a source of positive potential such as a battery 29. The negative terminal of the battery 29 is grounded. An additional source of positive potential such as the battery 30 is connected to the second control electrode of the tube 24. The negative terminal of the second battery 30 is connected to the positive terminal of the first battery 29. The screen electrode, the suppressor electrode and the anode of the tube 24 are biased by suitable operating potentials in a conventional manner.

The ungrounded terminal of the second bias resistor 32 is connected to the first control electrode of a second pentagrid tube 25. The cathode of the first pentagrid tube 24 is also connected through a grid resistor 21 to the first control electrode of the second pentagrid tube 25. The second control electrode of the second pentagrid tube 25 is also connected to the positive terminal of the battery 30. The cathode of the second pentagrid tube 25 is similarly connected, through a second cathode resistor 36, to the positive terminal of the first battery 29.

The ungrounded terminal of the third bias resistor 33 is connected to the first control electrode of a third pentagrid tube 26. This electrode is also connected, through a second grid resistor 22, to the cathode of the second pentagrid tube 25. The remaining electrodes are connected in the same manner as described for the other pentagrid tubes. Likewise, the ungrounded terminal of the fourth bias resistor 34 is connected to the first control electrode of a fourth pentagrid tube 27. This electrode is also connected to the cathode of the third pentagrid tube 26 through a third grid resistor 23. The remaining electrodes of the fourth pentagrid tube 27 are connected to sources of operating potentials similarly to the other pentagrid tubes. The cathode of the fourth pentagrid tube 27 is connected to the control electrode of a triode 28. The cathode of the triode 28 is connected to the positive terminal of the second battery 30. The anode of the triode 28 is connected through any suitable isolating means, such as a resistor 37, to a source of anode potential. Potentials, characteristic of the binary values of the individual terms of the sum of the applied quantities to be added, are derived in any desired manner from the terminals 38, 39, 40, 41, and 42 connected to the anodes of the tubes 24, 25, 26, 27 and 28, respectively. Indicator lamps 43, 44, 45, 46 and 47 which may, for example, be of the conventional gaseous discharge type, may be connected across the anode resistors of the tubes 24, 25, 26, 27 and 28, respectively. The lamps may be illuminated, for example, when the corresponding tubes are drawing appreciable anode or screen electrode current, whereby each lamp provides a direct indication of the value of each term in the binary sum.

The triode 28 is intended to provide a reduced anode potential, to indicate binary 1, only if a positive carryover signal is derived from the cathode of the fourth pentagrid tube 27. Otherwise, the triode 28 remains in a non-conducting condition due to the high positive cathode potential derived from the second battery 30.

Pentagrid tubes such as the RCA 6L7's have a circular cathode around which are placed five concentric grids. A cylindrical plate surrounds the whole structure. Starting with the grid closest to the cathode, the first grid is a control grid which is normally operated at some potential slightly negative with respect to the cathode; the second grid is a screen grid which is normally operated about 100 to 200 volts positive with respect to the cathode; the third grid is another control element which is normally operated in the same potential region as the second grid; the fourth grid is a screen grid and is usually connected to the second grid; the fifth grid is a suppressor grid normally connected to the cathode for the purpose of suppressing secondary emission from the anode.

The action of the first grid is similar to that of a control grid in a triode or pentode, controlling the total emission of the cathode. The second control grid being situated between the two screen grids is somewhat different. If it is more positive than the cathode, it has little or no influence on the electron current passing through the structure. As this grid becomes negative with respect to the cathode, its effect on the current to the plate is very similar to that of the first control grid when the second control grid is positive, but as the current is cut off by the second control grid going negative, the electrons are not returned to the cathode but are collected by the screen grid. Thus, the second control grid can be thought of as merely controlling the division of current between the screen and the anode.

In order to understand the operation of this circuit, let us assume that the pentagrid tube is connected in the following way: The cathode is connected through a resistor to a source of potential about 30 volts above ground. The first control grid is connected to a source of potential which starts about 15 volts above ground and

which can be increased in 30-volt steps to 105 volts. The screen is connected through a 12,000 ohm resistor to +300 volts. The second control grid is maintained at +55 volts, and the plate is connected through a 24,000 ohm resistor to the screen and also to one terminal of a glow tube whose other terminal is connected to the +300 volt supply.

As various potentials are impressed on the control grid, the circuit will behave as follows: When the first grid is at +15 volts, the current from the cathode will be cut off because of the positive bias imposed on the cathode. At the first step above 15 volts, i. e. +45 volts, some current will leave the cathode which will rise to approximately +50 volts. Some of this current will strike the screen grid, but a large part of it will pass through and strike the anode making the anode go negative. The voltage developed by the current flowing through the screen resistor and that developed by the plate current flowing through the plate resistor and the screen resistor will be sufficient to light the neon indicator lamp connected between the plate and the +B. When the voltage of the first grid rises by another 30 volt increment to 75 volts, the cathode will rise to about 77 volts which makes it sufficiently positive with respect to the second control grid to completely cut off the stream of electrons passing to the plate. The cutting off of the plate current causes its potential to rise to that of the screen which, because of the low screen resistance, is not sufficient to light the indicator lamp.

Thus, the neon tube indicates the value of a digit of a binary number. The value indicated being one when the neon tube is lighted and zero when it is unlighted. The indication should be zero when the grid is most negative, should be one when it is advanced by one increment to +45 volts, should be zero and a carryover provided when the grid is positive by two increments, that is when the grid is at +75 volts. It should be on indicating one and a carryover should be provided when the grid is at 105 volts. When connected to another circuit the potential of the plate indicates the number. If it is too positive to cause the glow lamp to light, the indication is zero. If it is negative the indication is one.

In this circuit the variable potential on the first control grid is derived from three sources. The first two sources are the trigger circuits of the two input systems. The third source is a cathode of the pentagrid tube concerned with the preceding digit. This source represents a carryover.

There are several different ways of coupling the control grid to these various sources. The one shown in the diagram is arranged to fit the group of trigger circuits shown as the input counters. The cathodes of the pentagrid tubes are connected through 20,000 ohm resistors to a bus maintained at +45 volts. The first control grid of the succeeding pentagrid tube is connected to this cathode by another 20,000 ohm resistor. A third 20,000 ohm resistor is connected from the control grid to ground. With this arrangement in the absence of any signal on the grid of the first pentagrid tube and from the input circuits, the first control grid of the second pentagrid tube is maintained at +15 volts while its cathode is maintained at +30 volts. These voltages are suitable for cutting off the cathode current. The second control grid of each pentagrid tube is maintained at +55 volts. The resistors coupling the

first control grid of each pentagrid tube to the input trigger circuits should be in the neighborhood of 24,000 ohms, and the cathodes of the tubes in the trigger circuits at which these are connected should swing about 110 volts. Under these conditions, a voltage change of one increment on the cathode of one pentagrid tube will cause slightly less than one half an increment change in the potential of the first control grid of the succeeding pentagrid tube. This change is insufficient to have any significant influence on the rest of the circuit. However, if the cathode of a pentgrid tube rises two increments, it causes one full increment change in the potential of the control grid of the succeeding pentagrid tube and does have the effect of a change of one on the input to this tube. A change in the trigger circuit from off to on will change the potential of the control grid of the pentagrid tube by a single increment. With this arrangement an indication of one in either of the input circuits or an indication of two or three in the preceding pentagrid tube will cause the grid to effectively rise by one increment. If both of the input circuits are on or if one is on and the preceding circuit indicates two or three, the grid will be positive by two (or two plus) potential increments. If both of the input circuits indicate on and the preceding pentagrid tube indicates two or three, the grid will be full positive and the tube will indicate three, i. e., the neon lamp will indicate one and a carryover will be passed to the succeeding digit. Thus, the tube may be used to indicate the sum of two digits plus a carryover.

The first pentagrid tube in the series is not supplied with a carryover, and therefore, the separate screen resistor is unnecessary and only a plate resistor, whose value is the sum of the combined plate and screen resistor in the succeeding pentagrid tubes need be used.

Since the final pentagrid tube has a carryover and there are no input elements to combine with this carryover, the indication of this carryover may be had by means of a simple triode whose cathode is biased at the same potential as the second control grid in each of the pentagrid tubes and in whose plate circuit is connected to a resistor equal to the sum of the plate and screen resistor of the pentagrid tubes shunted by a neon indicator lamp.

The half voltage increment which may be impressed on a control grid will cause non-uniformity in the plate currents. This non-uniformity is of no consequence since it does not interfere with the on or off nature of the output signal. The effect of several of these half signals occurring in successive pentagrid tubes does not cause trouble because the degeneration which is present in the resistive networks and cathode follower systems greatly reduces the influence of a half step in succeeding tubes.

It should be understood that as many pentagrid tubes, as required for the number to be added, may be connected in cascade in a similar manner. Slight degeneration occurs in each stage which may prove objectionable if a very large number of stages are cascaded. This may be overcome readily by employing an occasional stage of amplication between successive pentagrid tubes, although it is not necessary unless a very large number of tubes are cascaded.

It should be understood that the various control and bias potentials may be derived and applied to the various circuits herein in any other

suitable manner known in the art. It should be also appreciated that the carryover and sum indicating potentials may be derived from any other suitable circuit components which will provide the required polarity for satisfactory circuit operation.

Thus the invention described comprises an improved method of and means for adding quantities represented by voltages corresponding to the values of binary terms of said quantities wherein the static characteristics of pentagrid tubes are utilized to provide potentials characteristic of each digit and carryover quantity in the sum.

I claim as my invention:

1. The combination of an electron discharge element provided with anode, cathode and screen electrodes and with first and second control grids, a cathode lead impedance element, means for applying one fixed positive potential to said second control grid and a lower fixed positive potential to said cathode through said cathode lead impedance, means for applying to said first control grid a potential which changes by discrete steps, and an anode lead including series-connected impedance means of relatively high and low values connected at their junction point to said screen electrode.

2. The combination of a pair of electron discharge elements each including a cathode and anode, first and second control grids and a screen grid, means for applying operating potential to said anodes and screen grids, means including a pair of impedance devices each connected in the lead of a different one of said cathodes for biasing said cathodes to a predetermined positive potential, means for maintaining said second control grids at a predetermined positive potential, means connecting the cathode of one of said elements to the first control grid of the other of said elements, and means for raising the potentials of said first control grids by discrete steps.

3. The combination of a pair of electron discharge elements each including a cathode and anode, first and second control grids and a screen grid, means for applying operating potential to said anodes and screen grids, means including a pair of impedance devices each connected in the lead of a different one of said cathodes for biasing said cathodes to a predetermined positive potential, means for maintaining said second control grids at a predetermined positive potential, means connecting the cathode of one of said elements to the first control grid of the other of said elements, and means including a pair of groups of trigger circuits for raising the potentials of said first control grids by discrete steps.

4. The combination of first and second electron discharge elements each including a cathode and anode, first and second control grids and a screen grid, means including an impedance device for applying operating potential to said anodes and screen grids, means including a pair of impedance devices each connected in the lead of a different one of said cathodes for biasing said cathodes to a predetermined positive potential, means for biasing said second control grids to a predetermined positive potential, means for raising the potentials of said first control grids by discrete steps, and means connected between the cathode of said first element and the first control grid of said second element for raising the first control grid potential of said second element by one discrete step when the first control grid potential of said first element has been raised by two discrete steps.

5. The combination of first and second electron discharge elements each including a cathode and anode, first and second control grids and a screen grid, means including an impedance device for applying operating potential to said anodes and screen grids, means including a pair of impedance devices each connected in the lead of a different one of said cathodes for biasing said cathodes to a predetermined positive potential, means for biasing said second control grids to a predetermined positive potential, means for raising the potentials of said first control grids by discrete steps, means connected between the cathode of said first element and the first control grid of said second element for raising the first control grid potential of said second element by one discrete step when the first control grid potential of said first element has been raised by two discrete steps, and means connected to said anodes for providing the same indication in response to first control grid potentials which have been raised by one and by three discrete steps.

6. The combination of a plurality of electron discharge elements each including a cathode and anode, first and second control grids and a screen grid, means for applying operating potential to said anodes and screen grids, means for biasing said second control grids to a positive potential, means including a plurality of impedance devices each connected in the lead of a different one of said cathodes for biasing said cathodes to a predetermined positive potential, means including a pair of groups of trigger circuits having their units of the same order connected to corresponding ones of said first control grids for raising the potential of said first control grids by two discrete steps, and means connected from the cathodes of said elements to the first control grid of the next successive element for raising the potentials of said first control grids by one discrete step when the first control grid of the immediately preceding element has been raised by two discrete steps.

RICHARD L. SNYDER, Jr.