C. L. BERGER.

SURVEYOR'S INSTRUMENT.

APPLICATION FILED MAR. 4, 1912.

1,125,939.

Patented Jan. 26, 1915.

2 SHEETS—SHEET 1.

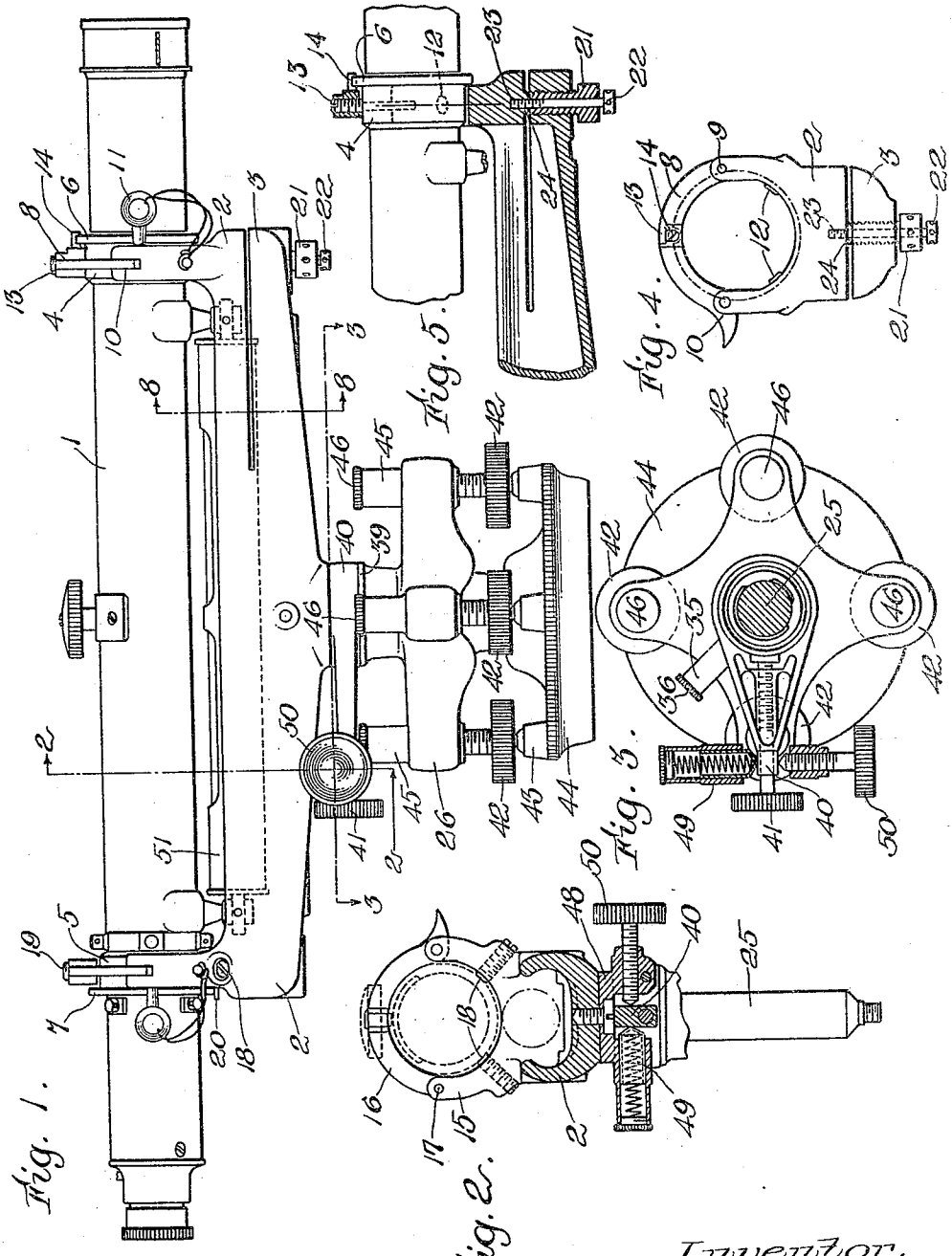

Fig. 1.

Fig. 2.

Fig. 3.

Fig. 4.

Fig. 5.

Witnesses:
Edward Maxwell
James R. Hodder

Inventor.
Christian L. Berger.
by Geo. S. Maxwell,
Attorneys

THE NORRIS PETERS CO., PHOTO-LITHO., WASHINGTON, D. C

C. L. BERGER.

SURVEYOR'S INSTRUMENT.

APPLICATION FILED MAR. 4, 1912.

1,125,939.

Patented Jan. 26, 1915.

2 SHEETS—SHEET 2.

Fig. 6.

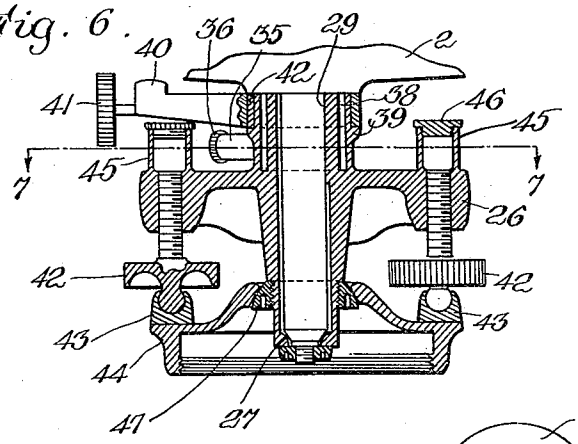

Fig. 8.

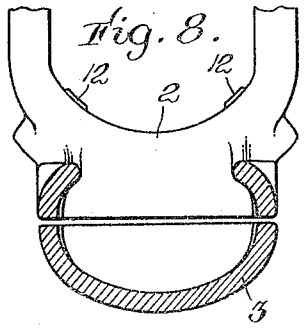

Fig. 7.

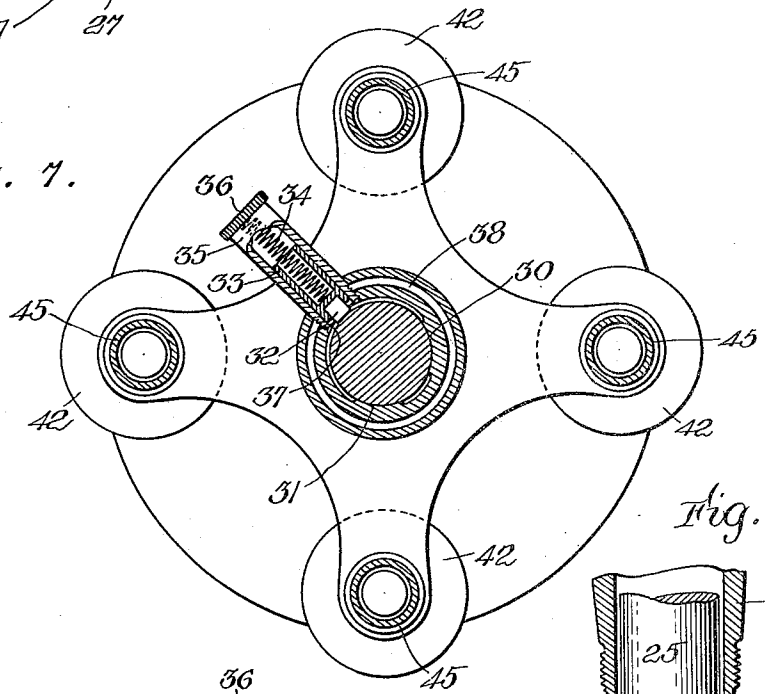

Fig. 10.

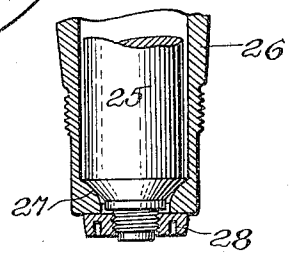

Fig. 9.

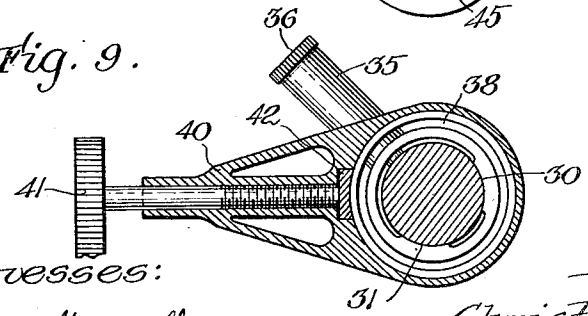

Witnesses:

Edward Maxwell

James R. Hodder

Inventor:

Christian L. Berger,

by Geo. S. Maxwell,

Attorney.

THE NORRIS PETERS CO., PHOTO-LITHO., WASHINGTON, D. C.

UNITED STATES PATENT OFFICE.

CHRISTIAN L. BERGER, OF BOSTON, MASSACHUSETTS.

SURVEYOR'S INSTRUMENT.

1,125,939. Specification of Letters Patent. Patented Jan. 26, 1915.

Application filed March 4, 1912. Serial No. 681,547.

To all whom it may concern:

Be it known that I, CHRISTIAN L. BERGER, a citizen of the United States, and resident of Boston, in the county of Suffolk and State of Massachusetts, have invented an Improvement in Surveyors' Instruments, of which the following description, in connection with the accompanying drawings, is a specification, like letters on the drawings representing like parts.

My invention relates to surveyors' instruments, and particularly to that type known as surveyors' transits or Y levels, and my object is to improve and perfect instruments of that type.

It is a particular object of my invention to improve the means of mounting and supporting the cross-bar holding the telescope in such instruments, and to provide a construction whereby such supporting means will be free from all strain or binding in its bearings. Such supporting means is preferably a rotatable post, and my invention contemplates improved bearings both at its end and throughout its length. This is an important feature in mounting an instrument of precision, but is especially important in surveyors' instruments such as transists, theodolites, Y levels, etc.

A further important object is to provide means whereby the supporting post for the telescope will be yieldingly held in its bearings, and which means will automatically compensate for any looseness or play, whether occasioned by faulty construction, wear, or otherwise, in the bearings, and which will maintain the post firmly in its bearings and in a centered position.

Still further objects of my invention are to provide improved adjusting means in various parts of the instrument, and to enable such adjusting means to be quickly and easily made and to be locked in their position wherever adjusted. One of the important novel features in such adjustments is in the provision of adjustable bearing means in the Y supports upon which the telescope normally rests and in the means coöperating therewith.

Other objects of my invention are to improve the construction and form of the leveling head, the cross-bar, the means to operate the leveling head, means to prevent the clogging or injuring of the leveling-head adjusting screws, means to protect and partially inclose the spirit level, means to secure the advantages of strength, lightness, ease of manufacture, etc., from a rounded form, and to render the entire transit more compact, more easily positioned, more easily adjusted, and more accurate and serviceable in operation than heretofore.

Other important features, details of construction, and combinations of parts will be hereinafter more fully pointed out and claimed.

Referring to the accompanying drawings, wherein a preferred embodiment of my invention is shown as applied to a Y transit, Figure 1 is a side elevation of the telescope, the cross-bar, and leveling head; Fig. 2 is a view partly in cross-section on the line 2—2 of Fig. 1; Fig. 3 is a view partly in cross-section on the line 3—3 of Fig. 1; Fig. 4 is an end view of the front Y; Fig. 5 is a view showing the connection between the telescope and the adjusting end of the telescope support, illustrating the support in longitudinal section; Fig. 6 is a sectional view of the leveling head; Fig. 7 is an enlarged plan view, partly in section, on line 7—7 of Fig. 6; Fig. 8 is a view on the line 8—8 of Fig. 1; and Figs. 9 and 10 are enlarged views partly in cross section of details of construction.

Any suitable or usual type of telescope 1 may be employed, which is supported by front and rear Y arms which are formed on opposite end portions of a cross-bar 2. This cross-bar is of novel construction, and has its forward portion in two horizontal sections, the lower section being indicated at 3. The telescope is preferably provided with collars 4 and 5 affixed upon the barrel at appropriate positions to rest in the forward and rear Y supports. These collars have flanges 6 and 7 respectively, each flange being formed on its collar and arranged to contact with the outside of its respective adjacent Y support and thus act to prevent longitudinal movement of the telescope. These collars are each of similar diameter and their outer bearing surfaces are carefully arranged to be concentric with the line of collimation of the telescope. The forward Y support has a clamp 8 pivoted at 9 to one upstanding arm, and the free end of the clamp 8 is arranged to fit into a socket 10 in the other arm, and preferably a pin 11 may be used to lock the clamp 8 when in lowered position. Bearings 12 are preferably arranged in the lower part of the forward Y support as indicated in Fig.

4, these bearings being of any suitable metal and either fitted into sockets bored therefor in the Y support or otherwise secured. Threaded through the center of the top of the clamp 8 is a thrust screw 13 which may be adjusted to bear properly on the top of the collar 4 and thus hold the collar firmly upon the two lower bearings 12. A horizontal pin 14 is also secured to the clamp 8 and is adapted to engage with a notch in the flange 6 so that, when the clamp 8 is swung into its downward position to hold the telescope in the supporting Ys, the engagement of the pin 14 with the notch will prevent any rotative movement of the telescope.

The rear Y 15 has a clamp 16 pivoted at 17 to one arm of the Y and fitting in a socket cut therefor in the other arm of the Y in a similar manner to that just described in connection with the front Y. Two bearing members 18 are threaded through tapped holes in the opposite arms of the rear Y, as shown in Fig. 2, being similar in their position to the fixed bearings 12 of the front Y. The bearing members 18, however, are preferably arranged to be adjusted from the outside of the Y arms, being slightly longer than the tapped holes through which they are threaded and having slotted heads which will receive a common screwdriver to rotate them and give them any desired adjustment. A vertical thrust screw 19 is also threaded through the top of the clamp 16 to bear upon the top of the collar 5 and hold it firmly upon the lower bearing members 18 when the clamp 16 is in its locked position. In order to hold the threaded bearings 18 in their respective adjusted positions, set screws may be threaded through the Y arms at right angles to the tapped holes containing said members, one such set screw being indicated at 20 in Fig. 1.

The cross-bar 2 is of novel form, being preferably convex on its outer sides with a "tumble home" so as to present substantially a semi-circular form in cross section. The forward portion of the cross-bar 2 is sawed horizontally for a considerable length, the lower portion 3 being of considerably greater size and strength. Threaded through the forward portion 3 is a capstan screw 21, which screw is arranged to bear against the upper portion of the cross-bar. This construction permits a fine vertical adjustment of the forward Y support, as proper rotation of the capstan screw 21 will force the upper portion of the cross-bar carrying the front Y upwardly relatively with the lower portion 3 and the rest of the cross-bar. The portion 3 comprising the continuous convex sides and bottom of the cross-bar affords sufficient rigidity to spring the upper part slightly to effect this adjustment. Preferably a tightening screw 22 is provided which may be conveniently positioned loosely through the hollow bearing screw 21 and with its inner end threaded into a suitably tapped hole 23 in the upper portion of the cross-bar. When the screw 21 is manipulated to make a desired adjustment, the tightening screw 22 may be rotated to lock the two portions in their adjusted relation, as will be readily understood on reference to Fig. 5. If desired, the bearing screw 21 may have its bearing end slightly concave and the corresponding portion against which it abuts may be formed as a boss 24 or any suitable bearing block may be utilized.

Fixed to the central portion of the cross-bar 2 is the supporting post or stem 25 which is held in a suitable socket formed in a leveling head 26, the lower portion of the post 25 being beveled and preferably resting against a convex bearing surface 27 (see Fig. 10). The post 25 has its lower end reduced in diameter and threaded, on which a nut 28 may be fitted. The socket in the leveling head is of a special construction, having the greater portion of its length of a considerably larger diameter than that of the post 25 and being formed with the upper portion only of appropriate diameter to act as a bearing support for said post. This upper portion is indicated at 29 in Fig. 6, and preferably comprises two sections 30 and 31, the post 25 being thrust and held against these bearing sections 30 and 31 by means of a spring-pressed plunger 32, which plunger is held in a sliding sleeve 33 and actuated by the spring 34. This sleeve is secured within a tube 35 having its forward end threaded and adapted to be screwed into a tapped socket in the side of the leveling head 26 and having a cap 36 at its outer end against which the spring 34 bears. The threaded aperture for the tube 35 is not open throughout its entire diameter into the socket where the post 25 rests, but is cut to leave a bearing 37 around the inner portion of the walls forming said socket, this bearing being for the purpose of providing a stop to limit the inward movement of the sleeve 33, so that if the post 25 is removed entirely from its socket, the sleeve 33 will not be displaced by the expansive action of its operating spring 34. Referring to Figs. 6, 7, and 9, it will be noted that the upper portion of the leveling head 26 is formed with an annular recess 38 therein, the inner portion forming the bearings for the post 25. The outer portion is provided with an annular shoulder or flange 39 which supports the plate clamp 40, this clamp having the usual tightening or binding screw 41 bearing against a loosely held block 42′, as indicated in Fig. 9, so that manipulation of the thumb nut 41 will act to tighten the block 42′ upon the leveling head and hold the clamp 40 in any desired position about the circumference of the

leveling head. The annular recess 38 permits such clamping without any danger of binding the bearings of the post 25, as it will be seen that the bearings 30, 31 and the block 30 are entirely free from any pressure exerted by such clamping action.

Through the leveling head are four threaded openings for the leveling screws 42 which have a ball-and-socket engagement with the screw caps 43, these screw caps in turn resting upon the surface of the foot plate 44 in a usual manner. It has been customary heretofore to have the bored openings in the leveling head for the leveling screws entirely open, but such construction has proven to be very objectionable because of the accumulation of dust, moisture, etc., in the screw sockets, and it is an important feature of my improved construction to prevent the accumulation of dust or moisture in the screw sockets and to preserve the leveling screws from injury, by forming the leveling head with upstanding protecting devices 45 over each of the sockets for the leveling screws 42, such protecting devices having caps 46 screwed on the top. This arrangement effectually prevents damage to the threads of the leveling screws and permits such screws to project upwardly beyond their sockets in the leveling head to the limit of their adjustability, the upstanding sections 45 being of appropriate height therefor. Threaded onto the lower section of the leveling head 26 is a ball and socket bearing 47 arranged to act against a coöperating bearing surface on the foot plate 44 in usual manner.

A tangent bracket 48 is secured by a set screw to the lower part of the cross-bar 2 and has a spring-actuated tangent piston 49 and a thumb nut 50 bearing upon opposite sides of the outer end of the plate clamp 40 in a customary manner for effecting fine adjustments of the telescope after it has been roughly positioned by the plate clamp 40.

Adjustably secured in any suitable manner to the lower portion of the telescope 1 is a spirit level 51 which is partially inclosed by the "tumble home" of the sides of the cross-bar 2, such construction acting to protect the spirit level in the greatest degree practicable while not interfering with the operator's view of the level.

The advantages of the construction embodying my invention will, it is believed, be readily appreciated by those skilled in the art. The rounded form of the cross-bar and of the leveling head affords the maximum of strength with a comparatively small amount of metal, simplifies the manufacture, and enables a finer finish to be more easily applied thereto. The protecting devices 45 and the caps thereon effectually protect the leveling screw sockets and maintain them in proper condition for quick and effective action at all times. The adjustable bearings 18 in the rear supporting Y permit easy and accurate adjustments to be made at any time and afford a ready means of readjusting the instrument and of compensating for any inaccuracy caused by wear on, or shrinkage of, the collar 5, while the adjusting screws 21 and 22 and the split form of the cross-bar at the forward supporting Y enable an equally effective and fine adjustment to be made at that end. The construction of the bearings for the supporting post 25 are of especial advantage and importance, as this enables the post and consequently the telescope and spirit level to be firmly held and seated at all times and under all conditions, automatically compensating for any looseness caused by wear, automatically centering the supporting post, and decreasing the friction when the telescope is swung upon its vertical axis. The short bearing at the upper portion of the post enables the level to be easily turned on its vertical axis and thus enables the operator to more quickly adjust the level in its desired position than was possible in former constructions. This result is also facilitated by the construction of the beveled face and convex bearing support at the foot of the post 25, this arrangement preventing any danger of binding between these parts. The entire instrument may thus be made more firm and compact than heretofore and more capable of withstanding the rough handling incident to field use without displacing its adjustments or endangering its accuracy of operation, which features are of the greatest importance in instruments of precision of this type.

Having described my invention, what I claim as new and desire to secure by Letters Patent is:

1. A surveyor's instrument, comprising a telescope having a vertical supporting post, said post being mounted for rotatable movement, and means to hold said post under a yielding pressure in its normally vertical position.

2. A surveyor's instrument, comprising a cross-bar arranged to hold a telescope, supporting means for the cross-bar including a rotatable center post, and bearings for the center post normally holding said post under a yielding pressure in a vertical position.

3. In a surveyor's instrument, a cross-bar arranged to hold a telescope, a supporting post for said cross-bar, and bearings for said post comprising a rigid bearing and a yielding bearing normally acting to maintain said post in contact with the rigid bearing.

4. In a surveyor's instrument, a cross-bar arranged to hold a telescope, a supporting post for said cross-bar, and bearings for said post comprising two rigid bearings and

a yielding bearing normally acting to hold said post in contact with the rigid bearings.

5. In a surveyor's instrument, a cross-bar arranged to hold a telescope, a supporting post for said cross-bar, and bearings for said post comprising means to compensate automatically for wear of the post and its bearings.

6. In a surveyor's instrument, a cross-bar arranged to hold a telescope, a vertically disposed supporting post for the cross-bar, bearings for said post comprising two fixed surfaces and a yieldingly actuated member constructed and arranged to maintain the post normally in contact with both fixed surfaces, and means to limit the movement of the yielding member.

7. In a surveyor's instrument, a cross-bar arranged to hold a telescope, a vertically disposed supporting post for the cross-bar, bearings for said post comprising two rigid bearing surfaces, each in contact with a portion only of the circumference of said post, and means to maintain the post yieldingly in contact with both rigid surfaces.

8. In a surveyor's instrument, a telescope, a rotatable supporting post therefor, a beveled support for said post, said post having thereon a beveled portion arranged to rest on the beveled support, and means to hold the post in normally vertical position.

9. In a surveyor's instrument, a telescope and a rotatable supporting post therefor having a beveled portion, a convex supporting member coöperating with said beveled portion on which the beveled portion of the post rests, and means to hold the post normally in vertical position.

In testimony whereof, I have signed my name to this specification, in the presence of two subscribing witnesses.

CHRISTIAN L. BERGER.

Witnesses:
EDWARD MAXWELL,
JAMES R. HODDER.

Copies of this patent may be obtained for five cents each, by addressing the "Commissioner of Patents, Washington, D. C."