Dec. 22, 1964 J. J. GREGORY 3,162,329

VALVE PROTECTING CAP FOR AEROSOL-TYPE CONTAINERS

Filed Jan. 11, 1962

2 Sheets-Sheet 1

Fig. 1

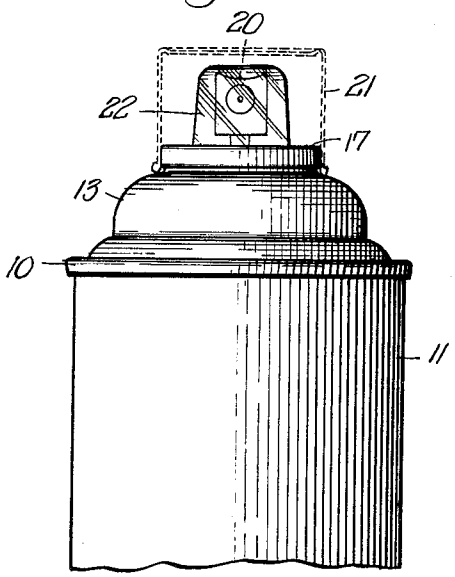

Fig. 2

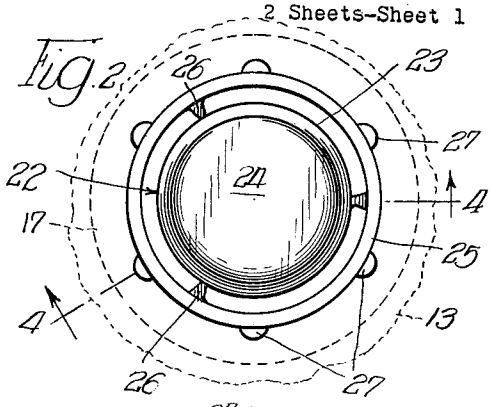

Fig. 3

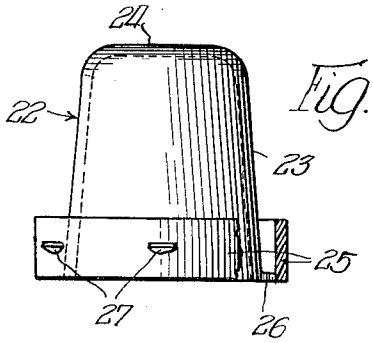

Fig. 4

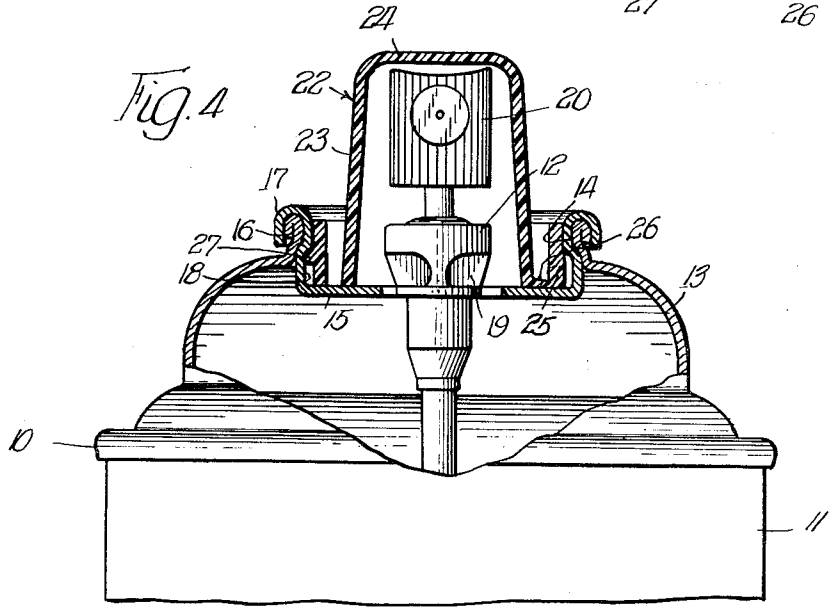

INVENTOR.
Joseph J. Gregory,
BY
Cromwell, Greist & Warden
Attys.

Dec. 22, 1964 J. J. GREGORY 3,162,329

VALVE PROTECTING CAP FOR AEROSOL-TYPE CONTAINERS

Filed Jan. 11, 1962 2 Sheets-Sheet 2

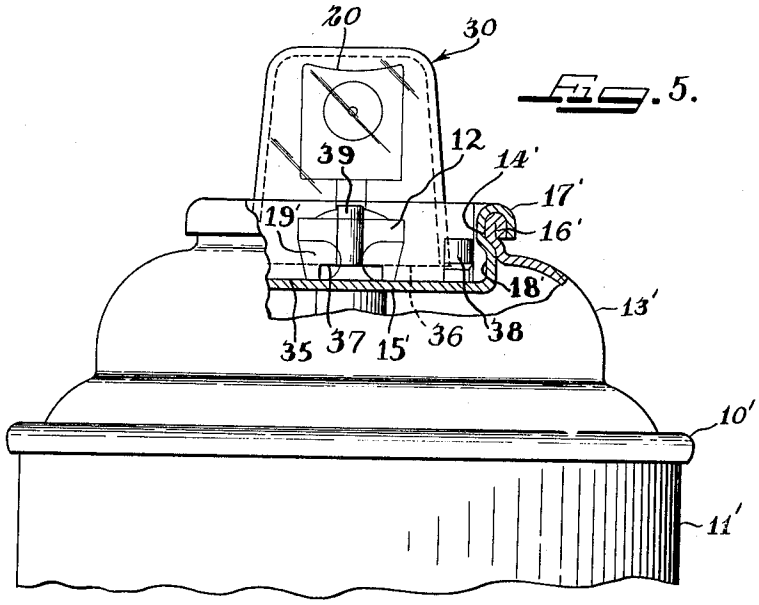

Fig. 5.

Fig. 6.

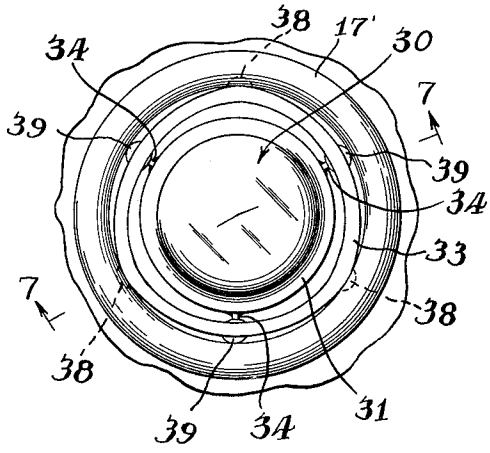

Fig. 7.

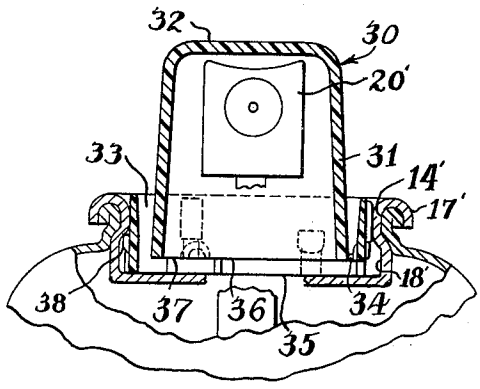

INVENTOR.
JOSEPH J. GREGORY
BY
Cromwell, Greist & Warden
Atty's.

United States Patent Office 3,162,329
Patented Dec. 22, 1964

3,162,329

VALVE PROTECTING CAP FOR AEROSOL-TYPE CONTAINERS

Joseph J. Gregory, Westchester, Ill., assignor to Arnel Industries, Inc., Chicago, Ill., a corporation of Illinois

Filed Jan. 11, 1962, Ser. No. 165,637
5 Claims. (Cl. 222—182)

This invention relates to aerosol-type dispensing containers and is more particularly concerned with improvements in a protective cap for the dispensing valve of this type container.

This application is a continuation-in-part of application Serial No. 72,959, filed December 1, 1960 and now abandoned.

It is a general object of the invention to provide a simple and effective cap for preventing accidental or unauthorized operation of the dispensing valve of an aerosol container after the container is filled and during the handling and/or storage of the container prior to its use by a purchaser or other authorized user.

It is a more specific object of the invention to provide a protective cap for the valve assembly of an aerosol-type container which will provide an indication of unauthorized or accidental operation during the handling, shipment or storage of the container until it is delivered to an authorized user, the cap being so constructed and so mounted on the container that it may readily be removed and discarded when it is desired to dispense the contents of the container while the presence or absence of the cap on the container serves to indicate whether there may have been any tampering with or operation of the dispensing valve.

It is a still more specific object of the invention to provide a cap forming member for an aerosol-type dispensing container having a valve assembly mounted in a supporting cap in the top of the container which comprises a dome-shaped body and a flange-like annular base to which the body is connected by readily breakable members with the base being adapted to be inserted within a recess in the supporting cup for the valve assembly and to remain in the recess when the body is twisted to free the same from the base and permit removal thereof so as to provide access to the spray head of the valve.

It is a further object of the invention to provide a cap for temporarily covering and protecting the valve assembly on an aerosol-type dispensing container which comprises a tubular body closed at the top end and connected by peripherally spaced, frangible arms to a ring-like annular base member of larger diameter which is adapted to be seated in a recess in the supporting cup for the valve assembly and to remain therein when the body is separated therefrom by breaking the connecting arms.

It is a still further object of the invention to provide a protective cap for the valve assembly of an aerosol-type dispensing container which comprises a tubular body closed at the top end and connected at the open bottom end by peripherally spaced frangible arms to a ring-like annular base member of larger diameter with the base member having its bottom edge spaced below the bottom edge of the body member so that when the base member is seated in the supporting cup for the valve assembly the body may be separated therefrom by applying sufficient downward force to break the connecting arms, thereby permitting the body to be discarded and providing access to the discharge head of the valve.

These and other objects and advantages of the invention will be apparent from a consideration of the preferred embodiments thereof comprising protector caps shown by way of illustration in the accompanying drawings wherein:

FIGURE 1 is an elevational view of an aerosol-type dispensing container having a cup supported valve assembly in the top of the container which is covered by a protective cap embodying the principal features of the invention;

FIGURE 2 is a plan view, on an enlarged scale, of the cap which is shown in FIGURE 1 with portions of the dispensing container being shown in dotted lines;

FIGURE 3 is a side elevational view on an enlarged scale, of the cap with portions thereof broken away;

FIGURE 4 is a vertical sectional view taken on the line 4—4 of FIGURE 2, with the top portion of the dispensing container being shown partially in section and partially in elevation;

FIGURE 5 is an elevational view of the top portion of an aerosol dispensing container having a cup supported valve assembly in the top which is covered by a modified form of the cap, the container having portions broken away;

FIGURE 6 is a plan view of the cap of FIG. 5 with portions of the dispensing container being shown; and

FIGURE 7 is a vertical sectional view taken on the line 7—7 of FIGURE 6, with the top portion of the dispensing container being shown partially in section and partially in elevation.

Referring to FIGURES 1 to 4 of the drawings, there is illustrated an aerosol-type dispensing container **10** which is adapted for use in the marketing of liquid or semi-liquid products which are capable of being dispensed from the pressurized can body **11** through a dispensing valve assembly **12**. The can body **11** is of a conventional type and is provided with a dome-shaped top **13** having a dispensing opening **14** in which a supporting cup **15** for the valve assembly **12** is mounted and forms a closure for the opening **14**. The valve assembly cup **15** is secured on the peripheral flange **16** which surrounds the opening **14** by reversely turning the rim portion **17** of the cup **15** about the flange **16** and expanding the adjoining inner portion of the flange **16** so that a peripheral recess **18** is formed which extends about the bottom inside edge of the cup **15**. The valve assembly **12** is mounted in an upstanding housing **19** in the center of the cup **15** and includes a discharge head or button **20** which projects above the same and which is adapted to be operated by downward pressure on the top surface thereof. Since other details of the valve mechanism are well known and do not constitute a part of the present invention, they are not illustrated.

The portions of the valve assembly **12** which project above the base of the mounting cup **15** are normally covered by a tubular or cup-shaped cover or cap, such as indicated at **21**. The cover **21** is customarily made so that it is frictionally held on the outside periphery of the reversely turned flange **17** and is readily removable so that it may be replaced when the dispenser is not in use. Consequently, the cover **21** does not provide any indication of any tampering with or unauthorized operation of the discharge member **20** of the valve assembly **12**.

The protective cap **22**, which is constructed in accordance with the principles of the present invention, is provided for temporarily protecting the valve discharge member or push button spray head **20** against accidental or unauthorized operation prior to the intentional operation of the valve by the authorized user.

The protective cap **22** is preferably formed of a transparent plastic material such as methylmethacrylate, polystyrene, polyethylene, acrylonitrile or other suitable plastic having similar characteristics. It is molded or otherwise formed to provide a cylindrical bell-shaped body portion **23** having a closed top end wall **24** and having

a maximum diameter at the bottom open end. The diameter at the bottom end is substantially less than the inside diameter of the valve mounting cup **15** and somewhat greater than the external diameter of the valve housing **19**. The body portion **23** is connected at its bottom edge to an annular mounting ring **25** by a series of peripherally spaced, frangible, or readily breakable, radially extending connecting portions or arm members **26**. The annular base or mounting ring **25** is provided on its outside periphery with a series of spaced button-like projections **27**. The exterior diameter of the mounting ring **25** and the minimum internal diameter of the valve mounting cup **15** bear such a relation that the ring **25** may be forced, with a snap-like action, into the recess **18** at the base of the cup **15** so as to be retained therein and to resist removal by forces applied to the body **23** of the cap. The plastic material from which protective cap **22** is formed also is sufficiently resilient to permit this.

The cap **22** is applied to the container **10** after the filling and closing of the container with the product which it is adapted to contain. The ring-like base **25** of the cap **22** is snapped into the recess **18** of the cup **15** and the body portion **23** of the cap covers the upwardly projecting valve discharge member **20** and prevents operation of the same so long as the cap **22** is in position. This prevents unauthorized or accidental use of the discharge member **20** from the filling of the container until it reaches the authorized user. When access to the valve discharge member **20** is desired for dispensing the contents of the container **10**, the body portion **23** of the cap **22** is freed from the base ring **25** by breaking the connecting members **26** through the application of a twisting force on the body portion **23**. The body portion may then be discarded, leaving the mounting ring **25** seated in the valve cup **15** with the valve discharge member **20** accessible for use. The presence or absence of the body portion **23** of the cap **22** can be readily observed upon an inspection of the can and this provides an indicator for a prospective purchaser to judge the probable condition of the contents of the can **10**. With the cap body **23** in valve covering position on the can **10** the user is assured that the dispensing valve has not been tampered with or accidentally operated so as to deplete the supply of the product in the container. Absence of the cap body **23** from the can and the presence thereon of the ring **25** provides an indication that unauthorized or accidental operation of the valve discharge member **20** may have occurred.

In FIGURES 5 to 7 an aerosol-type dispensing container is shown which is generally of the same construction as the previously described container **10** with the elements thereof being identified by the same numerals primed. The container **10'** comprises a body **11'** and a ale assembly **12'** mounted in the dome-shaped top **13'** which has a dispensing opening **14'** with a supporting cup **15'** seated therein for receiving the valve assembly **12'**. The supporting cup **15'** is secured on the peripheral flange **16'** surrounding the opening **14'** by reversely turning the rim portion **17'** of the cup **15'** about the flange **16'** and expanding the inner portion of the flange **16'** so that a peripheral recess **18'** is formed which extends about the bottom inside edge of the cup **15**. The valve assembly **12'**, details of which are well known, is mounted in an upstanding housing **19'** in the center of the cup **15'** and includes a discharge member **20'** usually of push button construction which projects above the same and which is adapted to be operated by downward pressure on the top surface thereof.

The protective cap **30**, which is formed of a transparent plastic material such as described for the cap **22**, is molded or otherwise formed to provide a cylindrical bell-shaped body portion **31** having a closed top end wall **32** and downwardly and outwardly sloping side walls with a maximum diameter at the open bottom end

which is substantially less than the inside diameter of the valve mounting cup **15'** and greater than the valve housing **19'**. The body portion **31** is connected at its bottom edge to an annular mounting ring **33** by a series of peripherally spaced, frangible or readily breakable, radially extending arm members **34**. The lower edge **35** of the mounting ring extends a predetermined distance below the lower edge or bottom face **36** of the body portion **31**. The frangible arm members **34** have their bottom faces in the plane of the bottom face of the body portion and extend to cut-out slots **37** in the lower margin of the mounting ring **33**. The mounting ring **33** is provided on its outside surface with a series of peripherally spaced button-like projections **38** which are disposed intermediate the top and bottom edges. It is also provided with rib-like projections **39** which extend substantially the full depth of the ring **33** and which are aligned radially with the frangible arms **34**. These projections reinforce the connection of the arms **34** with the ring **33** and also aid in holding the ring **33** in the cup **15'**. The exterior diameter of the mounting ring **33** and the minimum internal diameter of the valve mounting cup **15'** bear such a relation that the ring **33** may be forced, with a snap-like action into the cup **15'** with the projections **38** disposed in the recess **18'** at the base of the cup **15'** so as to retain the ring **33** therein and resist removal by forces applied to the body portion **31** of the cap **30**. The projections **38** are spaced peripherally on the ring **33** between the projections **39** and the latter cause the ring to bow outwardly in the areas between them when the ring **33** is seated in the cup **15'** which results in the projections **38** being urged against the flange **17'** and helps to hold them seated in the recess **18'**.

The cup **30** is applied to the container **10'** after the filling and closing of the container. The ring-like base **33** of the cap is snapped into the recess **18'** of the cup **15'** and the body portion **31** covers the valve discharge member **20'** and prevents operation of the same so long as the cap **30** is in position. When access to the valve discharge member **20** is desired for dispensing the contents for the container **10'**, the body portion **31** of the cap **30** is freed from the base ring **33** by breaking the connecting arm members **34**. This may be accomplished by downward pressure on the body portion **31** in the direction of its axis, the body portion **31** being free to move in the axial direction when the arm members **34** are broken due to the raised position of the lower edge or face **36** of the body portion **31** relative to the lower edge **35** of the base ring **33** when the cap **30** is seated in the cup **15'**. Sufficient downward pressure is applied to the top of the body portion **31** to break the connecting arm members **34** and free the body portion **31** so that it may be removed and discarded. The breaking of the arm members **34** may, of course, be accomplished by a twisting force applied to the body portion **31** as described with reference to the cap **22**.

While particular details of construction and specific materials are referred to in describing the illustrated embodiments of the protective cap, it will be understood that different details of construction and other materials may be resorted to within the spirit of the invention.

I claim:

1. A protective cap for an aerosol-type dispensing container, which container is characterized by a body member having a dispensing opening in a wall thereof with a valve assembly supported in said opening by a closure of cup-like shape which opens upwardly and is provided with an inwardly facing annular recess in its outside wall, said protective cap being formed of transparent plastic material and comprising a tubular valve covering body section with an integral closure at one end thereof, a tubular base section of substantially less height than the body section and having an internal diameter somewhat greater than the external diameter at the edge of the open end of said body section and peripherally spaced,

readily breakable members connecting the open end of said body section with said base section, said body section extending into said base section radially spaced from said base section and having its open bottom end spaced above the bottom end of the base section, said base section being constructed and arranged so that it may be seated in said recess, bottomed within said closure and retained therein frictionally engaged with the inner annular surface of said outside wall while an axially directed force is applied to the body section to break said connecting members and free said body section whereby said body section may be removed and discharded thereby providing access to said valve.

2. A protective cap for an aerosol-type dispensing container, which container is characterized by a body member having a dispensing opening in a wall thereof with a valve assembly supported in said opening by a closure of cup-like shape which opens upwardly and is provided with an inwardly facing annular recess in the wall defining said dispensing opening, said protective cap being formed of transparent plastic material having substantial brittleness and comprisng a dome-like valve covering member, a mounting ring in the form of a tubular section of substantially less height than said valve covering member and having an internal diameter greater than the external diameter at the edge of the open end of said valve covering member said open end extending within the mounting ring, and peripherally spaced radial bridging members extending between the open end of said valve covering member and said mounting ring, the open edge of said valve covering member and said radial bridging members terminating short of the bottom edge of said mounting ring, said mounting ring bottoming within said closure and having an external diameter permitting it to be seated in said recess and means for frictionally engaging the facing inner surface of said outside wall for retaining the ring therein while sufficient force is applied to the valve covering member in the axial direction to break said radial bridging members and free said valve covering member so that it may be removed and discarded thereby providing access to said valve.

3. A protective cap for an aerosol-type dispensing container which container is characterized by a body member having a dispensing opening in a wall thereof with a valve assembly supported in said opening by a closure of cup-like shape which opens upwardly and is provided with an inwardly facing annular recess in the wall defining said opening, said cap being formed of transparent plastic material and comprising a tubular valve covering body section which is closed at one end thereof, a mounting base of ring-like section having less height than the body section and having an internal diameter greater than the external diameter at the edge of the open end of said body section, said base section bottoming within said closure, and peripherally spaced radial arm members connecting the open end of said body section with said base section, which arm members are of relative small cross section so as to be readily broken when substantial pressure is applied to said body section in the direction of the base section, said body section having the face thereof at its open end extending into said base section radially spaced therefrom and spaced above the face of the base section at the corresponding end thereof, said base section being constructed with peripherally spaced external projections so that it may be seated in said

recess and retained therein when axial pressure is applied to the body section to break said connecting arm members and free said body section whereby said body section may be removed and discarded thereby providing access to said valve.

4. A protective cap for an aerosol-type metal container, the container being of the construction which includes an upwardly opening cup-shaped top closure having a central protruding discharge member and the top closure having an annular upstanding rim spaced from said discharge member with the discharge member inside of said rim, the protective cap adapted to be disposed in the space within the rim to protect the discharge member, said cap having at least one portion thereof bottoming within said top closure, comprising a bell-shaped body portion closed at its top end and open at its bottom end and adapted to surround the discharge member, an annular base member concentrically arranged outside of the bell-shaped body portion and connected to the marginal edge of the open bottom end of said bell-shaped body portion only by a plurality of frangible circumferentially spaced apart arms, said open end disposed within said base member, said base member having means on exterior surface portions thereof adapted permanently to mount the same into the top closure engaged with the inside circumferential surface of said rim, whereby a force may be applied to said bell-shaped body portion to break said arms and enable removal of said body portion, so as to permit access to said discharge member, and said bell-shaped body portion having its bottom end spaced above the bottom end of the base member so that a downwardly directed force applied to said body portion will fracture said arms to permit separation of the body portion from the base member.

5. The combination of an aerosol-type container having the upper cup-shaped closure with an upstanding central dispensing valve with an indicator cap for protecting said dispensing valve from accidental or unauthorized use, said cap being formed of a plastic material which is relatively brittle, said cap having at least one portion thereof bottoming within said closure comprising a base in the form of a tubular section of relatively small cross section and having means on the external wall thereof adapted to frictionally engage with the interior wall portions of said closure of the container which define an inwardly facing annular recess extending around the dispensing valve, a dome-shaped body having its lower margins extending within said base and a plurality of circumferentially spaced frangible arms connecting the body and the base, said body being of a size sufficient to cover said dispensing valve and being adapted to be broken free of said base so as to permit its removal from said closure to provide access to the dispensing valve for authorized use thereof, the lower end of the base being axially spaced from the lower end of the body such that the body in turn is spaced above the bottom of the closure, whereby axial pressure upon the top of the body downward will break said arms to free said body.

References Cited in the file of this patent

UNITED STATES PATENTS

2,162,712	Hamberger	June 20, 1939
3,037,672	Gach	June 5, 1962
3,081,899	Parker	Mar. 19, 1963
3,125,259	Young	Mar. 17, 1964

UNITED STATES PATENT OFFICE

CERTIFICATE OF CORRECTION

December 22, 1964

Patent No. 3,162,329

Joseph J. Gregory

It is hereby certified that error appears in the above numbered patent requiring correction and that the said Letters Patent should read as corrected below.

Column 3, line 55, for "ale" read -- valve --; column 5, line 12, for "discharded" read -- discarded --; line 22, for "comprisng" read -- comprising --.

Signed and sealed this 27th day of April 1965.