US005908354A

United States Patent [19]

Okuniewicz

[11] **Patent Number: 5,908,354**

[45] **Date of Patent: Jun. 1, 1999**

[54] **PROGRAMMABLE SOUND CARD FOR ELECTRONIC DEVICES**

[76] Inventor: **Douglas M. Okuniewicz**, 2 Deer Trail, Council Bluffs, Iowa 51503

[21] Appl. No.: **08/795,152**

[22] Filed: **Feb. 7, 1997**

[51] **Int. Cl.**[6] **A63F 9/22**

[52] **U.S. Cl.** ..... **463/35**; 463/20; 273/143 R

[58] **Field of Search** ..... 463/35, 20; 381/61, 381/1; 704/270; 434/185; 273/143 R

[56] **References Cited**

U.S. PATENT DOCUMENTS

4,522,399	6/1985	Nishikawa .	
4,611,808	9/1986	Palmer .	
4,884,972	12/1989	Gasper	434/185
4,964,638	10/1990	Ishida .	
4,993,713	2/1991	Harada .	
5,096,195	3/1992	Gimmon .	
5,149,104	9/1992	Edelstein	463/35 X
5,178,389	1/1993	Bentley et al. .	
5,375,830	12/1994	Takemoto et al. .	
5,390,938	2/1995	Takeya	463/35
5,393,073	2/1995	Best	463/35
5,411,258	5/1995	Wilson et al. .	
5,467,856	11/1995	Okada .	
5,472,195	12/1995	Takemoto et al. .	
5,472,197	12/1995	Gwiasda et al. .	

Primary Examiner—Michael O'Neill
Attorney, Agent, or Firm—Adam H. Jacobs

[57] **ABSTRACT**

A programmable sound card for an electronic apparatus includes at least one read-only detection device adapted for connection to an electronic apparatus, the read-only detection device operative to detect selected event occurrences on an electronic apparatus and output event occurrence notification signals upon detection of an event. The read-only detection devices are connected to an event detection sampling device operative to detect and receive event occurrence notification signals from the detection devices, analyze those signals and output event occurrence information signals including information specifying event occurrences. A programmable event occurrence information signal computing device is connected to the event detection sampling device, the signal computing device operative to receive and analyze event occurrence information signals output by the event detection sampling device and output sound generation command signals for initiating generation of selected sounds by the programmable sound-producing device. Connected with the programmable event occurrence information signal computing device is a read/write audio signal storage memory device operative to store audio signals in retrievable form and access and output selected audio signals in response to reception of sound generation command signals from the programmable event occurrence information signal computing device. Finally, an audio signal output device is connected to the audio signal storage memory device is provided for transferring, converting and outputting the selected audio signals from the read/write audio signal storage memory device to a sound-producing device such as a speaker.

10 Claims, 10 Drawing Sheets

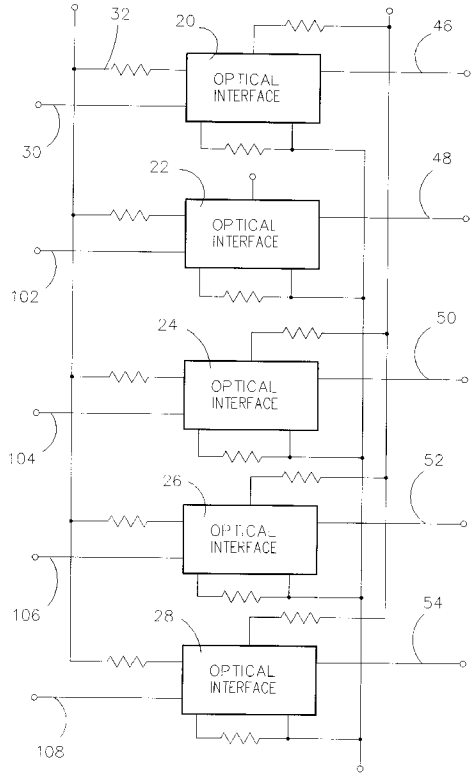

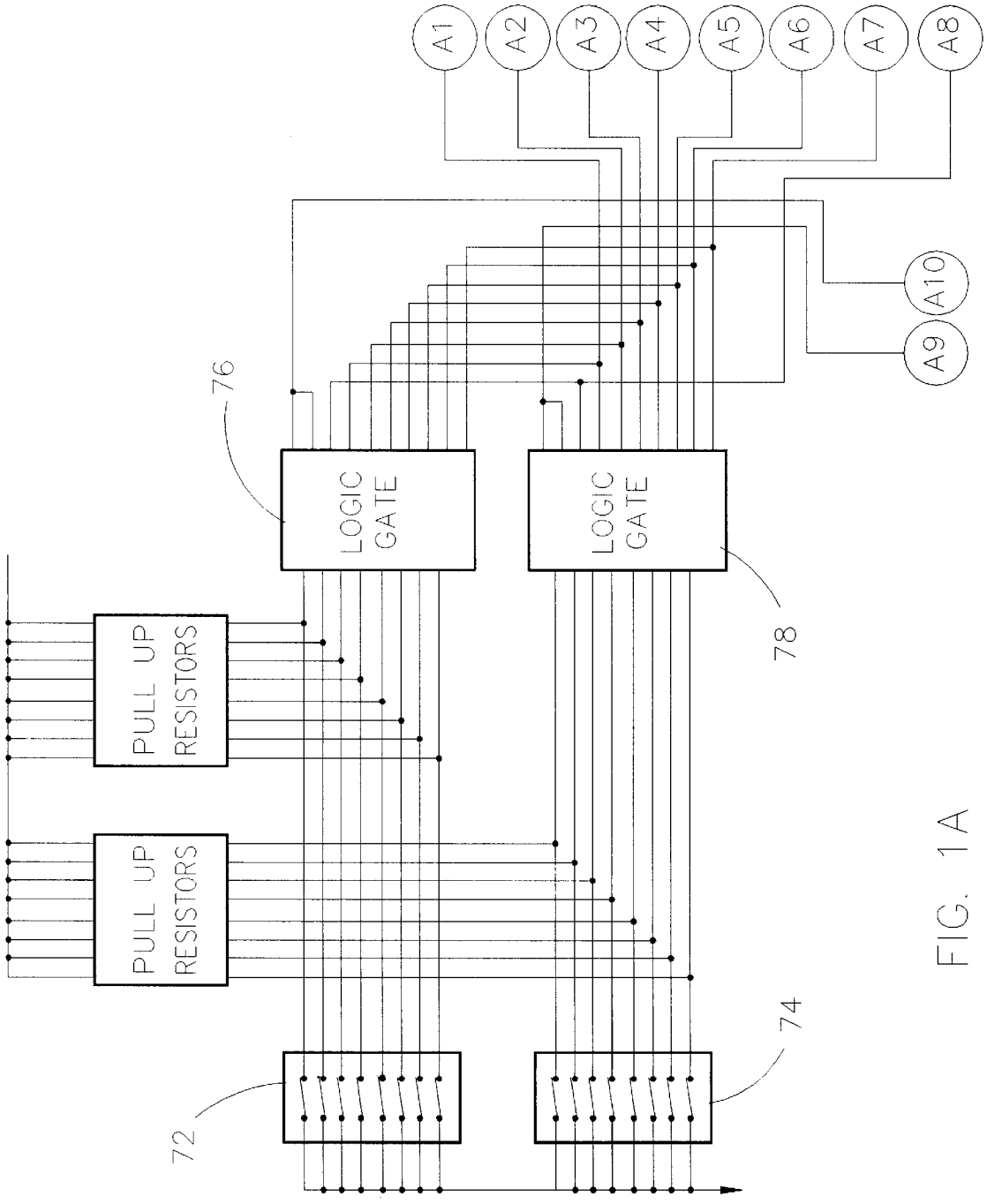
A1
A2
A3
A4
A5
A6
A7
A8
A10
A9
76
LOGIC GATE
LOGIC GATE
78
PULL UP RESISTORS
PULL UP RESISTORS
74
72

FIG. 1A

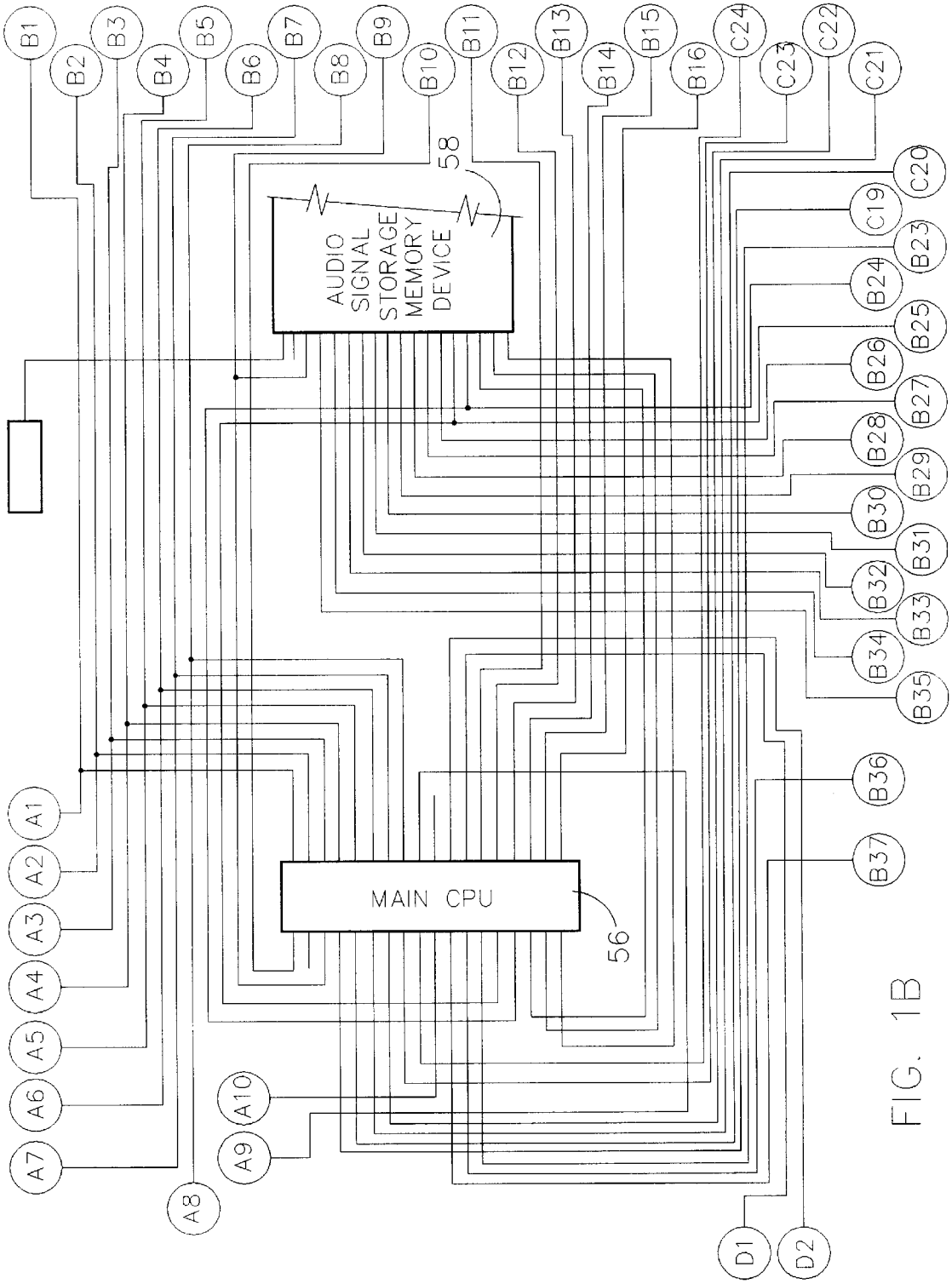
B1
B2
B3
B4
B5
B6
B7
B8
B9
B10
B11
B12
B13
B14
B15
B16
C24
C23
C22
C21
C20
C19
B23
B24
B25
B26
B27
B28
B29
B30
B31
B32
B33
B34
B35
B36
B37
58
AUDIO SIGNAL STORAGE MEMORY DEVICE
MAIN CPU
56
A1
A2
A3
A4
A5
A6
A7
A8
A9
A10
D1
D2

FIG. 1B

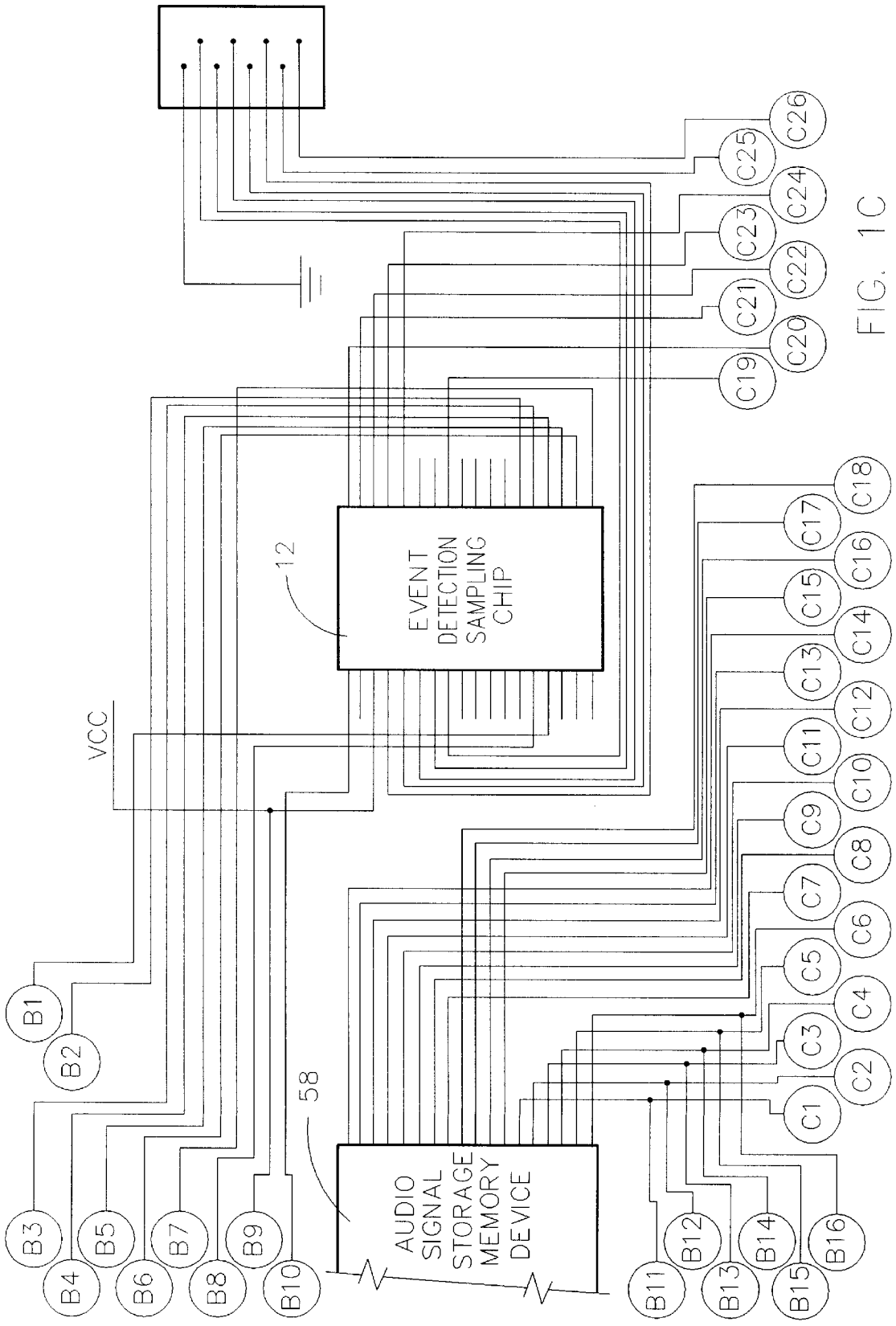
EVENT DETECTION SAMPLING CHIP
12
VCC
AUDIO SIGNAL STORAGE MEMORY DEVICE
58
B1
B2
B3
B4
B5
B6
B7
B8
B9
B10
B11
B12
B13
B14
B15
B16
C1
C2
C3
C4
C5
C6
C7
C8
C9
C10
C11
C12
C13
C14
C15
C16
C17
C18
C19
C20
C21
C22
C23
C24
C25
C26

FIG. 1C

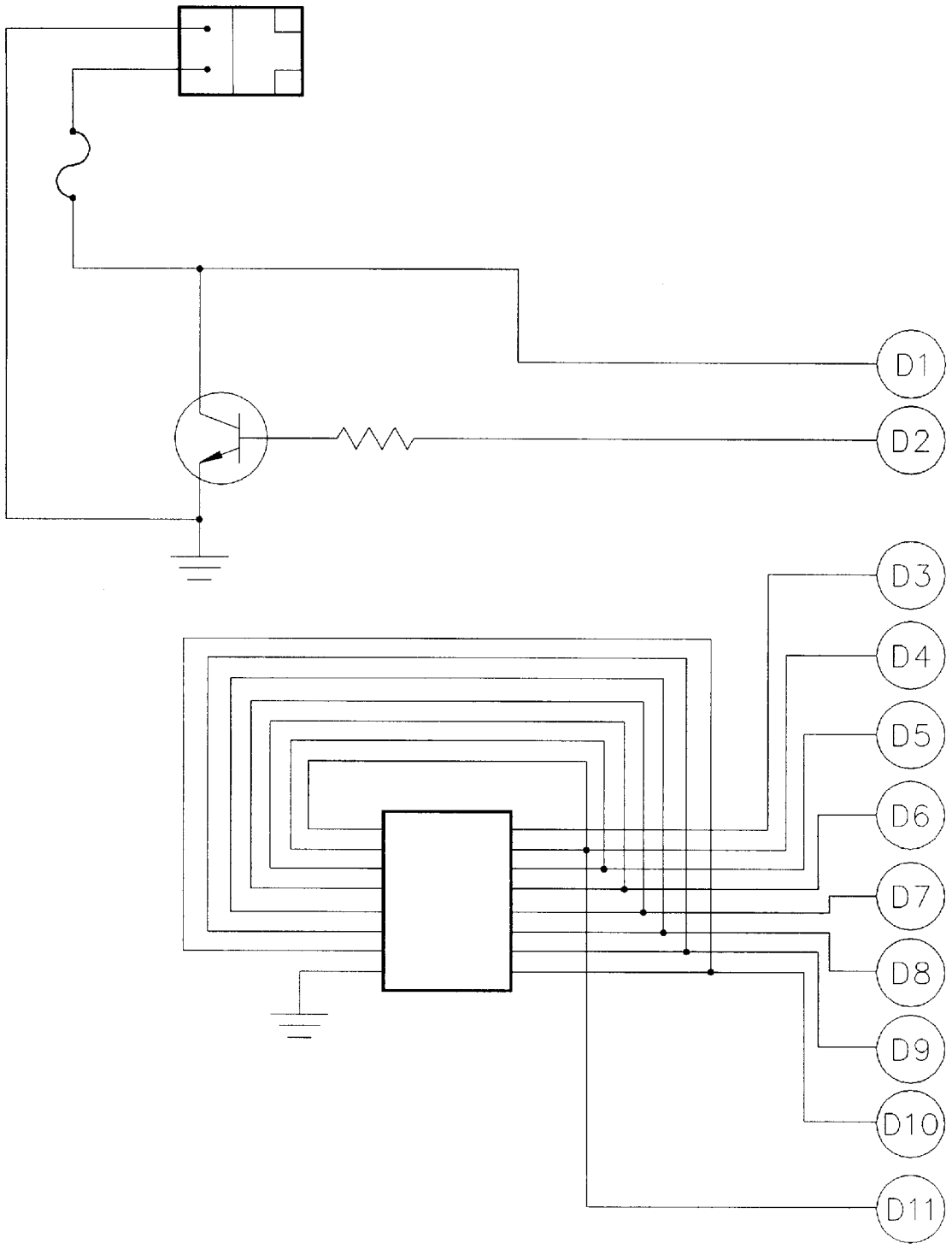

FIG. 1D

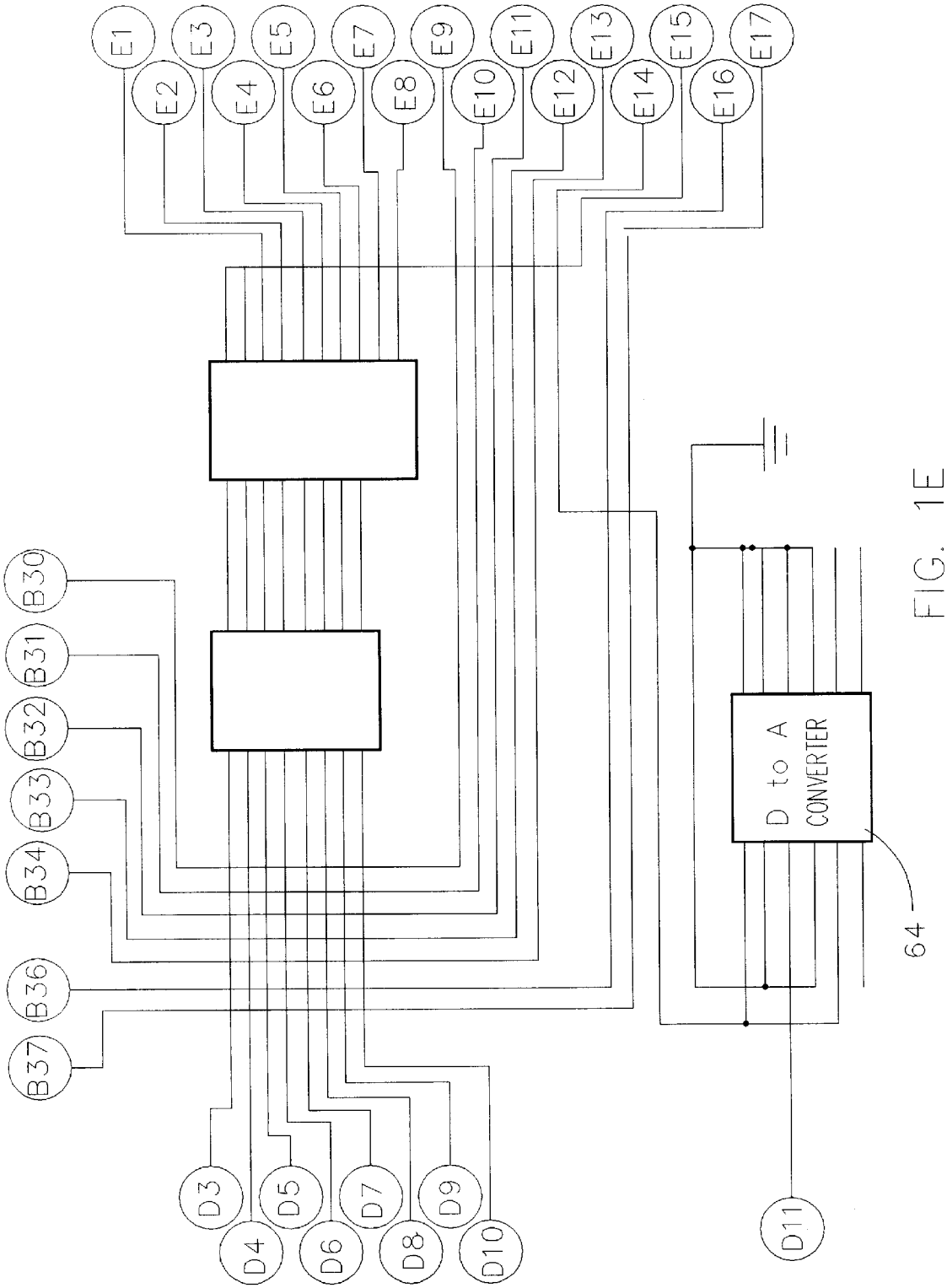
E1
E2
E3
E4
E5
E6
E7
E8
E9
E10
E11
E12
E13
E14
E15
E16
E17
B30
B31
B32
B33
B34
B36
B37
D3
D4
D5
D6
D7
D8
D9
D10
D11
D to A CONVERTER
64

FIG. 1E

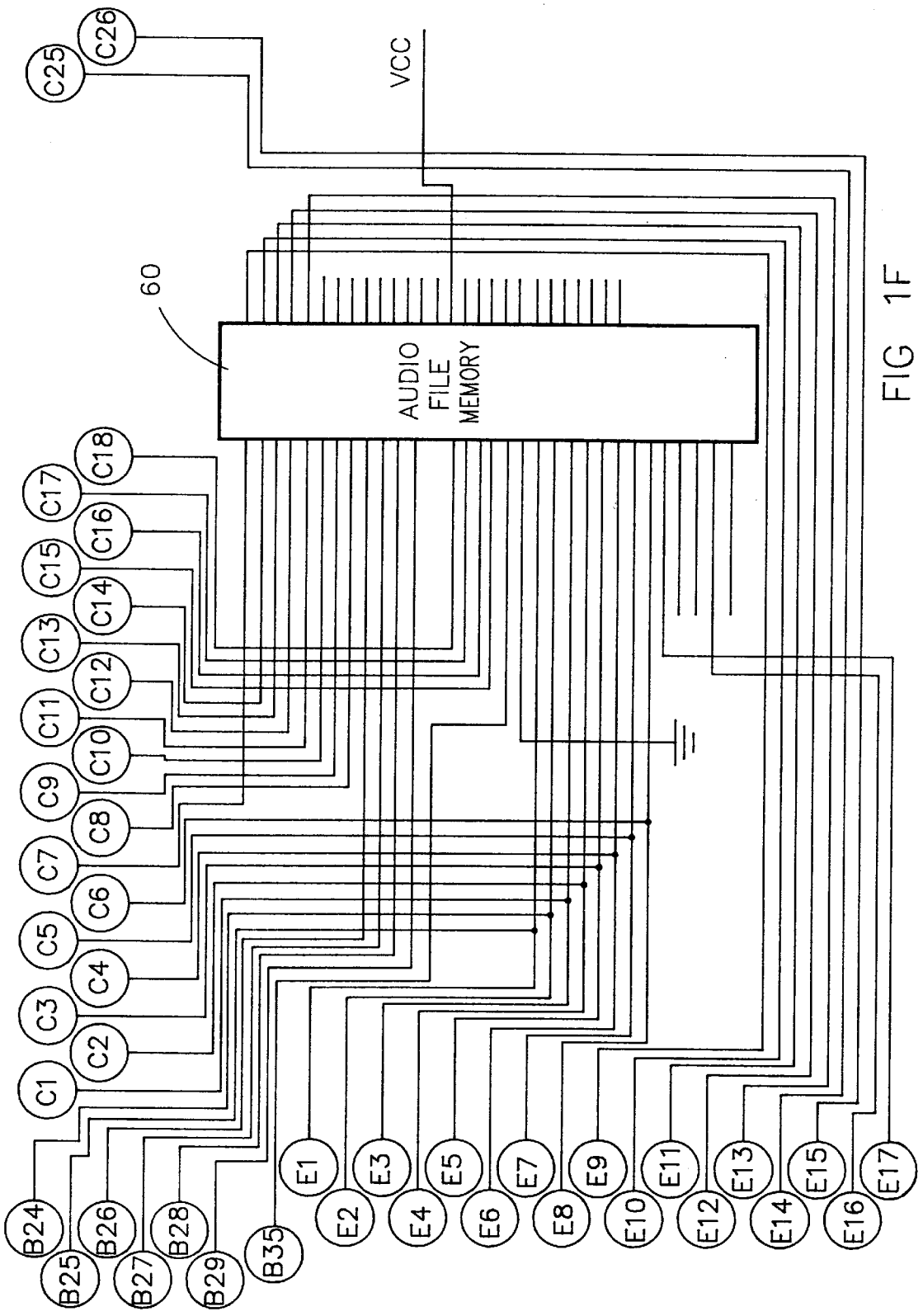
C25
C26
VCC
60
AUDIO FILE MEMORY
C18
C17
C16
C15
C14
C13
C12
C11
C10
C9
C8
C7
C6
C5
C4
C3
C2
C1
B24
B25
B26
B27
B28
B29
B35
E1
E2
E3
E4
E5
E6
E7
E8
E9
E10
E11
E12
E13
E14
E15
E16
E17

FIG 1F

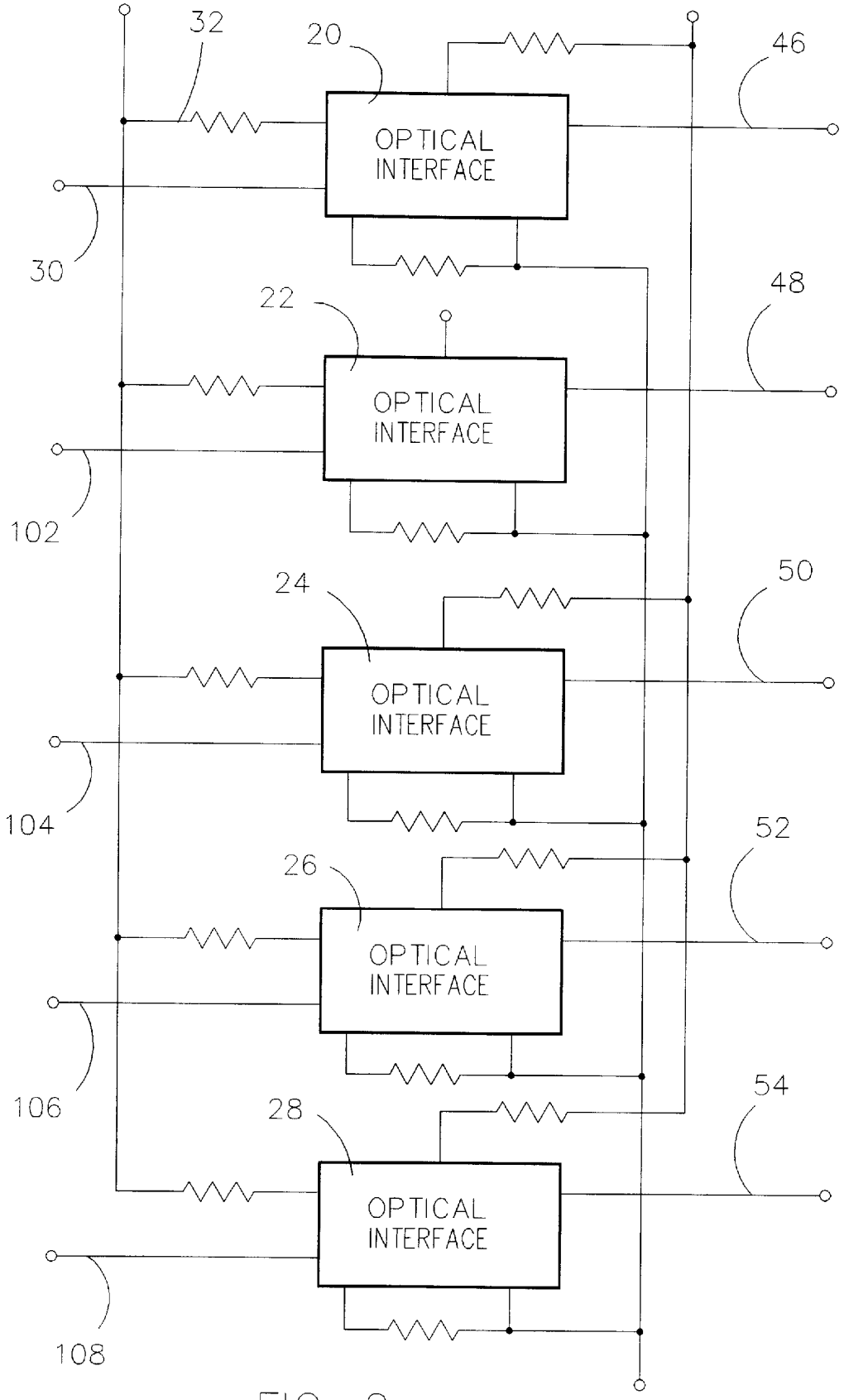
32
20
46
OPTICAL INTERFACE
30
22
48
OPTICAL INTERFACE
102
24
50
OPTICAL INTERFACE
104
26
52
OPTICAL INTERFACE
106
28
54
OPTICAL INTERFACE
108

FIG. 2

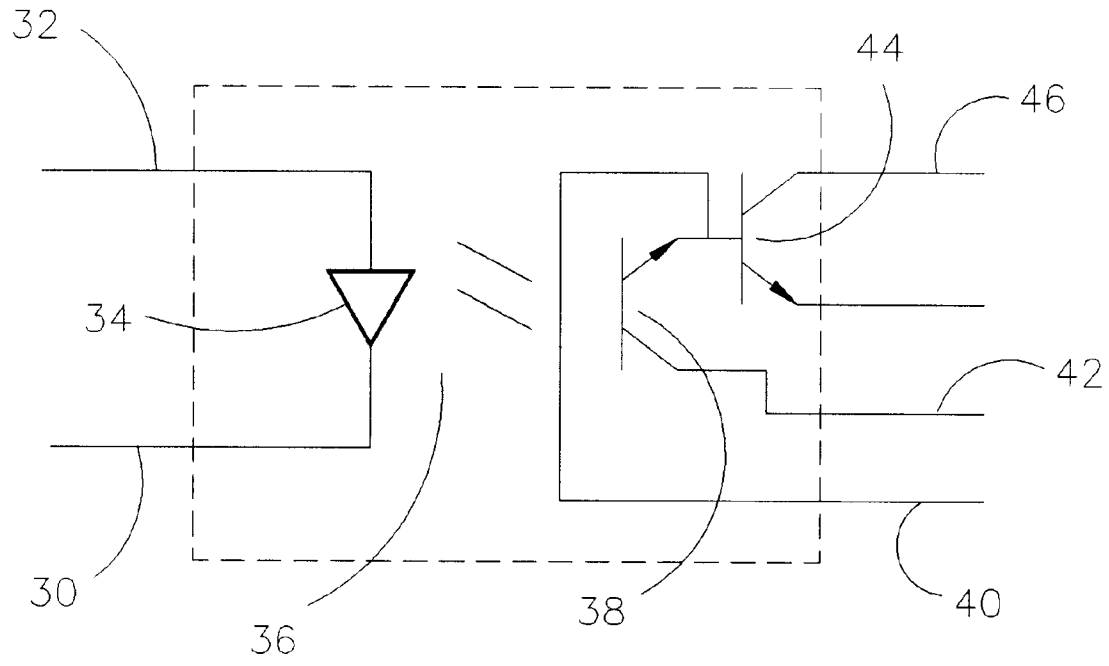

FIG. 3

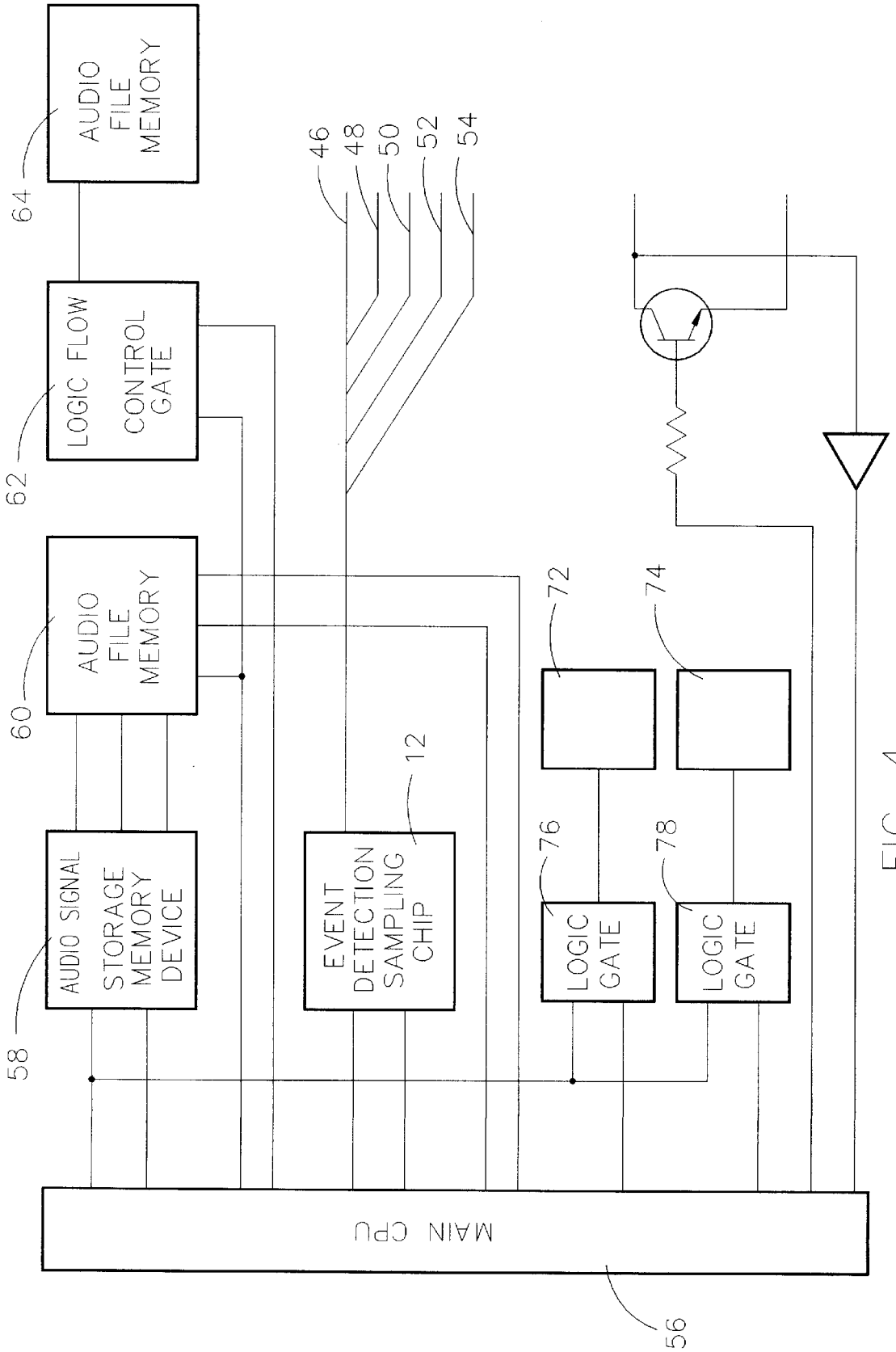
AUDIO FILE MEMORY
64
LOGIC FLOW CONTROL GATE
62
AUDIO FILE MEMORY
60
AUDIO SIGNAL STORAGE MEMORY DEVICE
58
EVENT DETECTION SAMPLING CHIP
12
46
48
50
52
54
72
74
76
78
LOGIC GATE
LOGIC GATE
MAIN CPU
56

FIG. 4

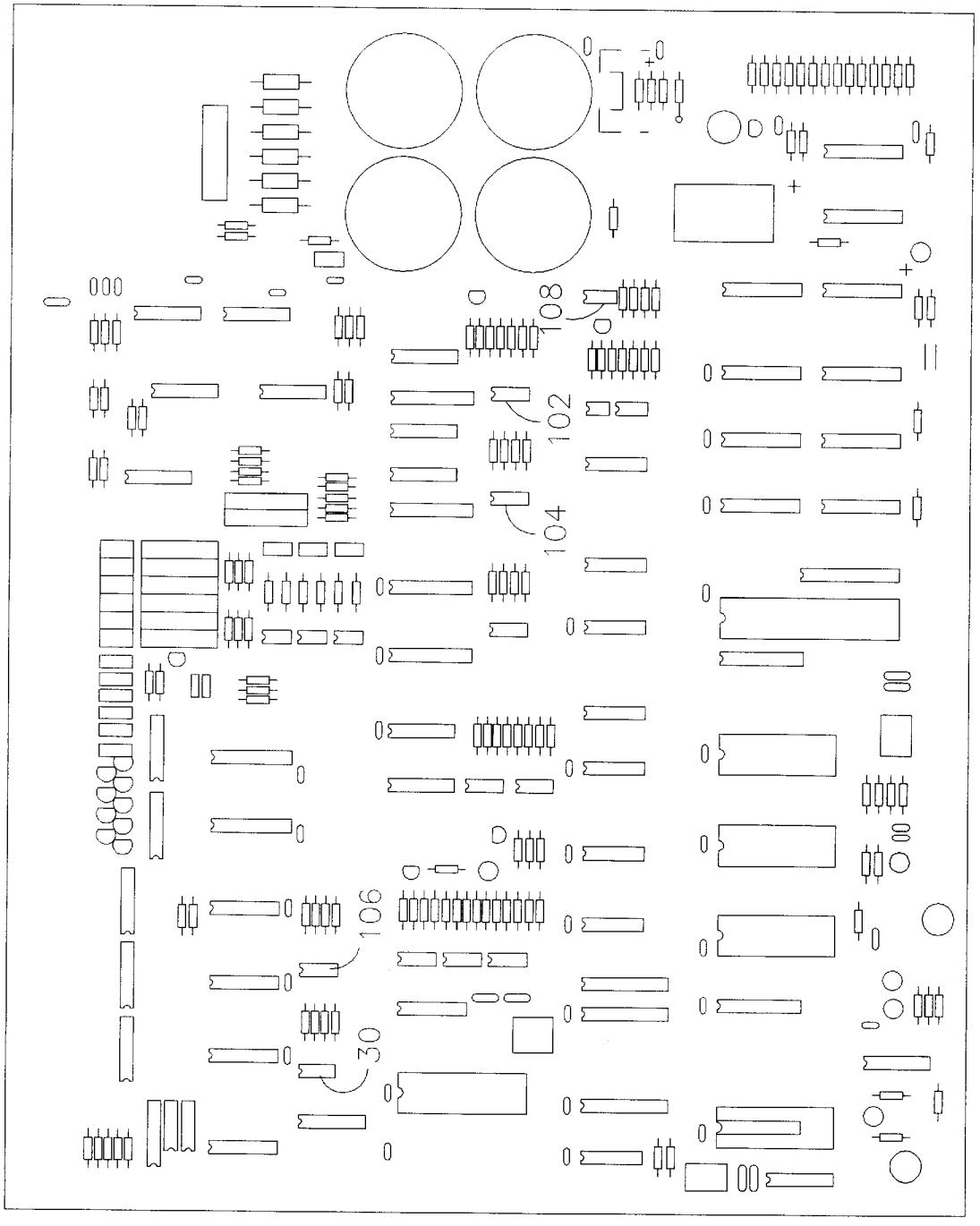

FIG. 5

PROGRAMMABLE SOUND CARD FOR ELECTRONIC DEVICES

BACKGROUND OF THE INVENTION

1. Technical Field

This invention relates to electronic sound cards and, more particularly, to a programmable sound card for an electronic device which includes at least one read-only detection device connected to a circuit board of an electronic apparatus, an event detection sampling device in information transmission connection with the read-only detection devices, a programmable event occurrence information signal computing device connected to the event detection sampling device, a read/write audio signal storage memory device in information transmission connection with the computing device and an audio signal output device for transferring the audio signals to a sound-producing device such as a speaker.

2. Description of the Prior Art

Slot machines and video poker machines continue to be the most widely used types of gaming devices found in the gaming industry. The oldest slot machines and video poker machines were relatively simple devices which included little in the way of sound generating devices, commonly including only a bell or buzzer to signify a winning combination on the reels. With the advent of new technology in the gaming industry, the slot machines and video poker machines were now able to produce a variety of pre-programmed sounds through the use of computer chip technology. These chips are most often constructed as integral parts of the gaming device and are programmed at the factory to produce a limited number of sounds in response to events such as a winning combination coming up on the reels. The sounds produced by the machine can be of high quality through the use of efficient loudspeaker systems.

In spite of the use of such new technology, one of the major disadvantages found in the prior art regarding the sounds produced by the slot machine has gone unaddressed. Specifically, because the chips are programmed by the factory, the sound produced by the machine cannot be changed by the customer, i.e., the casino. The sounds produced by the gaming device thus are always the same, and the gaming public may lose interest in play of the machine due to the lack of any changes in the output of the machine when winning combinations are produced. It is important to understand that on most machines the sound information and the payout tables are programmed on the same chip. If a user of the gaming device wishes to modify the sounds produced by the machine, the chip containing the sound bytes must be "reburned" or reprogrammed by the factory or the casino. The reprogramming of the chip, however, will mandate review and testing of the chip by an independent testing laboratory and by the state gaming commission to confirm that nothing on the chip was modified except for the sounds themselves. Obviously, if retesting of the chip each time the smallest change in sound produced by the chip is necessary, no casino location will wish to go through the process due to the length of time involved. There is, therefore, a need for a sound-producing device for inclusion in a gaming device which is capable of being quickly and easily reprogrammed to produce a different sound in response to a particular event occurrence, and which does not require retesting by an agent of the gaming commission each time a new sound is included.

It is thus seen that a disadvantage of the prior art is that the sound-producing devices found in gaming devices cannot be modified by the casino to produce alternative sounds. However, it is a further disadvantage of the prior art that the sound-generating devices on all but the newest machines are often technologically insufficient to produce such sounds as human speech and difficult-to-reproduce sounds. It therefore may be desirable to enhance the sound-producing capabilities of the gaming device by "adding on" a more sophisticated sound card. Due to restrictive gaming regulations, however, any such add-on sound card would have to be incapable of influencing the outcome probabilities of the gaming device, thus requiring a type of read-only detection means for detecting specific event occurrences on the electronic circuit board or the reels of the gaming device. At present, such read-only detection devices are not found in the prior art, as most, if not all, of the sound-producing devices found in the prior art are integrated into the gaming device and such read-only detection devices are not necessary. With the rapid improvement in sound cards, however, the need for non-intrusive read-only detection devices for use in combination with an add-on sound card has arisen. There is therefore a need for such a read-only detection device used in combination with an add-on sound card.

One of the most recent innovations in gaming is the multi-machine jackpot, such as Quartermania, Megabucks and Cool Millions. In these games, a bank of gaming machines are connected to one another in information transmission connection such that coin input at each of the machines adds to an overall jackpot which can be hit on the any of the machines in the group. These wide-area progressive games have acted to increase game play thus increasing the handle of the casino. The disadvantage to such wide-area progressive games is that the casino is again prevented from modifying the sound output of the machine when a jackpot or other winning combination is achieved. The casino may desire to formulate its own location-specific games, such as treasure hunts or other such games, in which the treasure would be "found" by a specific reel combination turning up on the machine. Should such a reel combination come up on the machine, the player would be notified by casino-specific sounds emanating from the machine. It also may be desirable to have "treasure hunts" between multiple casino locations having wide-area progressive games, but again the sounds emitted by the machine must be modified to reflect the new game play. Obviously, the sounds included in the machine from the factory are not designed with this type of option in mind, and it would be necessary for the casino to be able to interrupt the ordinary sound production of the gaming device and substitute its own desired sound output for particular event occurrences. It is believed that the variety offered by such sound variations will significantly increase "coin in" on the various machines due to the heightened interest in the modified games.

Another disadvantage found in those devices representative of the prior art is that the when an update of sound produced is desired, the chip carrying the sounds must be reprogrammed or "reburned". As was stated previously, on many machines the sound wave files are played by the same chip that controls the payouts and pay tables for the machine. Therefore, each time the chip is reprogrammed to issue new sounds, the modified chip must be retested by an independent laboratory and the state authorities. Obviously, a casino organization which has invested millions of dollars in slot machines does not wish to lose the use of the slots for a period of time during testing each time the sounds produced by the machine are modified. There is therefore a need for an easily updatable and reprogrammable sound-producing device for use in slot machines and the like that

will increase the usable life span of the slot machine and, more importantly, require only a single round of testing when initially added to the machine.

There are several examples of devices in machines proposed in the prior art which attempt to increase the amount of "coin in" by increasing interest in the games. For example, Nishikawa, U.S. Pat. No. 4,522,399, discloses a device for generating an impact sound for a slot machine, the device intentionally producing an impact sound when reels start to be rotated by motors. Clearly, however, this device cannot be modified in any meaningful way to produce a variety of sounds and thus its application to the gaming industry is limited.

A different approach to increasing interest in gaming is taken by Takemoto, et al., U.S. Pat. Nos. 5,472,195 and 5,375,830, which disclose, respectively, a display system at a game machine island and a slot machine comprising a plurality of liquid crystal displays. It is important to note that each of these inventions emphasize the visual aspects of the gaming devices in order to promote increased game play, but only addresses in standard fashion the auditory aspects of the gaming experience. Note that each of the devices includes only a simple sound card or a sound-producing device, and thus neither of the Takemoto inventions address the problem of reprogrammability presently found in the prior art.

Therefore, an object of the present invention is to provide an improved sound-producing device for use in casino gaming machines.

Another object of the present invention is to provide a programmable sound-producing device for an electronic apparatus which includes at least one read-only detection device adapted for connection to an electronic apparatus which is operative to detect selected event occurrences on the electronic apparatus and output event occurrence notification signals upon detection of an event.

Another object of the present invention is to provide a programmable sound-producing device for an electronic apparatus which includes an event detection sampling device in information transmission connection with the detection devices, the event detection sampling device operative to receive and detect the event occurrence notification signals from the detection devices, analyze the signals and output information specifying which events have occurred on the electronic apparatus circuit board.

Another object of the present invention is to provide a programmable sound-producing device for an electronic apparatus which includes a programmable event occurrence information signal computing device in information transmission connection with the event detection sampling device, the computing device operative to receive and analyze event occurrence information signals output by the event detection sampling device and upon detection of selected event occurrence information signals, output sound generation command signals for initiating generation of selected sounds by the programmable sound-producing device.

Another object of the present invention is to provide a programmable sound-producing device for an electronic apparatus which includes a read/write audio signal storage memory device in information transmission connection with the programmable event occurrence information signal computing device, the memory device operative to store audio signals in retrievable form and output those audio signals in response to reception of sound generation command signals.

Another object of the present invention is to provide a programmable sound-producing device for an electronic apparatus which may be quickly and easily reprogrammed by the casino itself to generate a different array of sounds in response to the same reel combinations turning up on the machine.

Another object of the present invention is to provide a programmable sound-producing device for an electronic apparatus which may be "added-on" to already existing gaming devices to enable the potentially outdated machine to be reinvigorated by production of an alternative group of sounds by the machine.

Another object of the present invention is to provide a programmable sound-producing device for an electronic apparatus, particularly a casino gaming device, which is capable of sampling event occurrences on the circuit board of the gaming device that is clearly incapable of influencing the outcome of any gaming event in the gaming device, thus permitting the sound-producing device to be added to gaming machines while requiring only a single inspection by a gaming commission. Future sound modifications will not require reinspection by the gaming commission.

Finally, another object of the present invention is to provide a programmable sound-producing device for an electronic apparatus which is durable in construction and safe and efficient in use.

SUMMARY OF THE INVENTION

The present invention provides a programmable sound-producing device for an electronic apparatus, the device including at least one read-only detection device adapted for connection to the electronic apparatus, the read-only detection device operative to detect selected event occurrences on an electronic apparatus and output event occurrence notification signals upon detection of an event. The read-only detection devices are connected in information transmission connection with an event detection sampling device operative to detect and receive event occurrence notification signals from the detection devices, analyze the event occurrence notification signals and output event occurrence information signals including information specifying event occurrences. A programmable event occurrence information signal computing device is connected in information transmission connection with the event detection sampling device, the signal computing device operative to receive and analyze event occurrence information signals output by the event detection sampling device and upon detection of selected event occurrence information signals, output sound generation command signals for initiating generation of selected sounds by the programmable sound-producing device. Connected in information transmission connection with the programmable event occurrence information signal computing device is a read/write audio signal storage memory device operative to store audio signals in retrievable form and access and output selected audio signals in response to reception of sound generation command signals from the programmable event occurrence information signal computing device. Finally, an audio signal output device in information transmission connection with the audio signal storage memory device is provided for transferring the selected audio signals from the read/write audio signal storage memory device to a sound-producing device such as a speaker, the audio signal output device operative to convert the audio signals to a format for driving a sound-producing device such as a loudspeaker.

The advantages of the present invention over those devices found in the prior art are numerous and include the fact that the present invention may be added to any existing

gaming device to produce alternative sound signals in response to event occurrences in the electronic apparatus. Furthermore, because the present invention is reprogrammable in a quick and easy manner, a variety of sound generation schemes may be instituted over the life span of a gaming device, thus insuring that consumer interest in the game remains relatively high. Also, because the present invention only samples events off of the electronic apparatus and cannot be used to modify the probabilities of gaming occurrences, it is believed that the present invention will be acceptable for use with slot machines and the like without requiring any more than a single additional inspection and certification by the gaming commissions of the various states. Because the computing device on the sound card may be programmed to interrupt the normal sound output of the gaming device and substitute an alternative sound, exciting new varieties of games may be introduced even though the new game is being played on the old piece of gaming machinery. Also, one of the most exciting features of the present invention is that unique messages such as advertisements for casino activities and the like can be included in the sound-producing device, and the variety of potential messages is unlimited. Therefore, the present invention provides a substantial improvement over those devices found in the prior art.

BRIEF DESCRIPTION OF THE DRAWINGS

FIG. **1** is a schematic diagram of the elements and connections of the sound-producing device of the present invention;

FIG. **2** is a circuit diagram of the read-only detection devices showing the interconnection of the devices;

FIG. **3** is a detail diagram of one of the read-only detection devices of the present invention;

FIG. **4** is a high level block diagram of the present invention showing the elements of the present invention; and

FIG. **5** is a block diagram of a typical gaming device circuit showing the sampling points used by the present invention.

DESCRIPTION OF THE PREFERRED EMBODIMENT

The programmable sound card **10** of the present invention is best shown in FIGS. **1–4** in schematic format. The actual physical structure of the sound card is not critical to the functioning of the invention and, therefore, the following description will focus mainly on the circuitry features of the invention. It is to be understood, however, that the programmable sound card **10** will preferably be of a standard size and shape as sound cards commonly found in the prior art, although variations in size and shape will fall under the intended broad scope of the appended claims.

The programmable sound card **10** of the present invention is best shown in high-level detail in FIG. **4** as including three separate EPROM microcontroller chips **12**, **56**, and **58**, each of which, in the preferred embodiment, would be an eight-bit CMOS microcontroller manufactured by Microchip Technology, Inc., part No. PIC16C6X. Of course, it is to be understood that numerous other types of microcontrollers may be used with the present invention provided those microcontrollers are programmable to perform the same or similar operations as will be described below.

To provide the interface between the programmable sound card **10** and an electronic circuit board, chip **12** is an event detection sampling chip **12** programmed to detect and receive event occurrence notification signals, analyze those signals and output information regarding a specific event occurrences.

On a standard slot machine board **100** as shown in FIG. **5**, there are three main lines of serial communications which control most of the slot machine's operations. These data lines are commonly known as "OUT", "IN" and "DISP". The "OUT" line handles all output information including the lighting of the machine's candle, the lighting of any of the machine's panel lights, and any other machine operations which require initiation of the particular operation by the machine. The "IN" line handles all input information, including coin in, handle pull and any other data input initiated by the machine operator. Finally, the "DISP" line handles all display data for display on the LED screen of the slot machine, such as credits available. A serious operational problem arises when data on the slot machine board **100** needs to be sampled by the event detection sampling chip **12** due to the numerous restrictions placed on the slot machine industry by gaming commissions across the country. Specifically, the addition of foreign devices to slot machine boards necessitates review by the gaming commission of the state in which the casino is located, thus mandating review each time the slot machine is altered in any manner. However, it is the intent of the present invention to provide a non-intrusive sampling system which functions as a read-only detection device to not interfere with the operation of the slot machine.

In the preferred embodiment, the read-only detection devices would be a plurality of optical interfaces **20**, **22**, **24**, **26**, and **28**, as best show in FIG. **2**. The slot machine board **100** shown in FIG. **5** is similar to a standard IGT (International Game Technologies) game board, which includes the three lines of serial communications ("OUT", "IN" and "DISP") and additionally includes the "ILOAD" line and the "Clock" line of communications. The "ILOAD" line sends an end of frame signal and acts as a "secondary clock",and the "Clock" line provides a clock pulse used for synchronization of signals on the slot machine board **100**. On the IGT board, data is sent to the registers of the chips on the board at discrete times as determined by the "Clock" line. Eight clock pulses constitute a packet and four packets constitute a frame, the end of the frame being signified by the "ILOAD" signal. At that signal the data collected in the registers is moved to the rest of the machine.

As best shown in FIGS. **2** and **3**, optical interface **20** is connected to the "ILOAD" line **30**, optical interface **22** is connected to the "CLOCK" line **102**, optical interface **24** is connected to the "OUT" line **104**, optical interface **26** is connected to the "IN" line **106** and optical interface **28** is connected to the "DISP" line **108**. FIG. **5** shows a standard IGT board and the preferred sampling connection points for the optical interfaces **20**, **22**, **24**, **26** and **28**. Each of the optical interfaces **20**, **22**, **24**, **26** and **28**, are preferably identical and therefore the following description of optical interface **20** should be understood to apply to the other optical interfaces **22**, **24**, **26** and **28**. Optical interface **20** is best shown in FIG. **3** as including two input lines, line **30** being the "ILOAD" line and line **32** being a +5 volt DC line coming from the slot machine board **100**. Lines **30** and **32** are connected to one another by a light-emitting diode **34** which will emit a light pulse when a signal is sent down the "ILOAD" line. The light pulse emitted by the light-emitting diode **34** is detected by the light detection section **36** of the optical interface **20**. The light detection section **36** of optical interface **20** preferably includes a light-sensitive transistor **38** connected to a ground line **40** at the output thereof and

a +5 volt DC current line **42** attached to the input of the transistor **38**. The output end of the transistor **38** is further connected to the base of a second transistor **44** which acts to transfer the signal to the ILOAD output line **46** which leads to the event detection sampling chip **12**. Optical interface **20** thus transfers an exact duplicate of the signal output by the "ILOAD" line **30** to the ILOAD output line **46**, the signal being sampled in a non-intrusive manner. Furthermore, because the light-emitting diode **34** is incapable of transferring signals to the "ILOAD" line **30** there is no possibility that event occurrences on the slot machine board **100** can be affected or changed by signals sent down the ILOAD output line **46**. Each of the other optical interfaces **22**, **24**, **26**, and **28** will operate in substantially the same manner.

An alternative sampling system for detection of specific game events would include a set of optic readers mounted on or adjacent the reels of the slot machine. Commonly, the multiple reels on the slot machine each have an optical detection device mounted adjacent the reel to allow the resulting reel combination to be read by the machine. The alternative sampling system of the present invention would add an optic reader to each reel at a location on the reel that would not interfere with the normal operation of the slot machine. The reel combination would be read by the optic readers and an offset figure would be applied to determine the precise reel combination turning up on the reels. In the preferred embodiment, the optic readers would be optic interrupter sensors including a light-emitting diode and a photo-transistor, the diode and transistor arranged such that the diode faces the transistor and the reel tabs are positioned therebetween. In this manner, when a tab passes between the diode and the transistor, the transistor detects the absence of light and the signal output by the transistor is interrupted, thus signaling the presence of the tab. The tab size corresponds to a particular symbol on the reel, and by applying the offset figure the reel combination may be detected. The resulting data on the reel combination would be used by the programmable sound card **10** in the same manner as the data taken directly from the circuit board **100** of the slot machine.

In the original embodiment, five output lines feed into the event detection sampling chip **12**, the ILOAD output line **46**, the CLOCK output line **48**, the "OUT" output line **50**, the "IN" output line **52**, and the "DISP" output line **54**. The event detection sampling chip **12** is programmed to constantly monitor the output lines **46**, **48**, **50**, **52**, and **54**, as the data flow on most slot machine boards **100** is constant. The event detection sampling chip **12** thus acts as a kind of "babysitter" chip which constantly monitors the data lines for event occurrence notification signals sent down the output lines **46**, **48**, **50**, **52**, and **54**. The preferred microcontrollers described previously are designed to be programmed using RISC code which is a low-level machine code programming language. A program written to program the event detection sampling chip **12** would be understood by anyone skilled in the art of RISC code programming. It is to be understood that numerous modifications, additions and substitutions may be made, and therefore the following descriptions shall refer to the functioning of the event detection sampling chip **12** and not specifically to a low-level machine code program.

As the event detection sampling chip **12** is constantly monitoring the data output lines **46**, **48**, **50**, **52**, and **54**, any event occurrence notification signal output by the slot machine board **100** will be detected. The signals output by the slot machine board **100** are transferred by the event detection sampling chip **12** to determine which specific event has occurred in the slot machine. This translated information is then stored in the data storage registers within the event detection sampling chip **12**. The precise location and number of registers within the event detection sampling chip **12** will be dependent upon the type of chip used in the programmable sound card **10** but it is expected that the event detection sampling chip **12** will be capable of storing upwards of 100 separate event occurrence notification signals.

Connected to the event detection sampling chip **12** in information transmission connection therewith is a programmable event occurrence information signal computing device **56** which will be referred to herein as the main CPU (central processing unit). The main CPU **56** is programmed to scan the registers within the event detection sampling chip **12** and remove, identify and compare the event occurrence notification signal found within the register of the event detection sampling chip **12** to a table of numbers preloaded into the registers of the main CPU **56** itself. These numbers held within the main CPU **56** correspond to selected event occurrence information signals which in turn correspond to particular machine events. For example, common machine events may include coin in, handle pull, jackpot, or any other payoff combination or the like.

As was described in connection with event detection sampling chip **12**, the programming code used for the main CPU **56** again would be in RISC code. Again, however, it is to be understood that the exact object code to be used in the main CPU **56** is not critical to the invention so long as the main CPU **56** operates to perform all of its intended functions.

When the main CPU **56** identifies a match of an event occurrence information signal and a machine event number within the register of the main CPU **56**, the main CPU **56** must signal the start of a sound byte. To clarify, the programmable sound card **10** of the present invention is designed to substitute casino-specific sound bytes for the sound bytes normally produced by the slot machine. Obviously, replacement of all of the sound bytes produced by the machine is not necessary nor even advisable in many instances and therefore the main CPU **56** is operative to replace only those sound bytes designated for replacement by the numbers entered in the registers of the main CPU **56** and allow the remaining sound bytes to be produced normally by the slot machine.

When the main CPU **56** detects a match of a selected event occurrence informational signal and a number held within the registers of the main CPU **56**, a sound generation command signal is output by the main CPU **56**. The main CPU **56** is in information transmission connection with a read/write audio signal storage memory device **58**, commonly referred to herein as the memory manager. The memory manager chip **58** is programmed to keep track of the starting and ending points of the audio files stored in the audio file storage memory **60**. The memory manager chip **58** also sets the 22 memory address lines used to access up to 2 Megabytes of memory for the audio files. Lastly, the memory manager chip **58** tracks the playback speed for each sound stored in the audio file storage memory **60**. In the preferred embodiment, the memory manager chip **58** would include a table of audio file information organized in the following manner. The table would be seven (7) bytes wide (each byte including 8 bits) and up to 256 rows long, depending on the number of audio files present in the PC/MCIA card discussed below. Each row of information contains data for a specific audio file, with one byte containing information about the playback or sampling speed, three bytes containing information about the starting address

of the audio file in memory, and the final three bytes containing information about the length of the audio file to be played.

The starting address of the audio file is stored in 22 of the 24 bits of the 3 bytes. The 22 bits are needed to access the 2 megabytes of sound data stored in the PC/MCIA card described below. Likewise, it is conceivable that a single audio file would be stored on the card, thus requiring the length of the audio file to be shown by a 22 bit number also, hence the 3 byte size of the length information. The sampling speed can be varied to produce sound quality that meets or even exceeds CD quality. It is preferred that if the value in the speed byte equals zero (0), that machine function will be unavailable and no sound will be substituted for the standard slot machine sound. A great benefit of the above-described method of sound file storage and access is that the same audio file may be accessed in response to several event occurrences, and the same file may even be "broken up" such that only a fragment of the audio file is played. For example, if the entire audio file contained the phrase "Wow, you've hit the jackpot", the present invention could play back "Wow" or "jackpot" or "jackpot hit, Wow" in any order, so long as the starting address of the individual words or phrases were stored by the memory manager chip **58**. This versatility is unique in the gaming industry.

Again, it is to be understood that the specific program and microprocessor used in the present invention is not critical to the invention so long as the memory manager clip **58** is capable of fulfilling all of its entended operations.

When the main CPU **56** detects specific sound substitution, the main CPU **56** signals the memory manager clip **58** to initiate playback of the placement audio file. The start location, length of sound byte and playback or sampling speed are downloaded by the memory manager clip **58** which loads the start location into the audio file storage memory **60** thus accessing the desired audio file. The memory manager clip **58** also signals a logic flow control gate **62** to open to allow audio file data to flow from the audio file storage memory **60** to a digital to analog converter unit **64** operative to convert the audio file download from the audio file storage memory **60** into an audio wave that when sent to an amplifier (OP AMP) in a loud speaker system will become the original sampled sound.

After the logical flow control gate **62** is opened, the playback speed for the audio file must be loaded into a timer **66** which controls the playback and sampling speed of the audio file. Each time the timer **66** resets, the memory address lines are updated to reflect the next memory location, the process continuing for the length of the audio file.

The main CPU **56** and the memory manager clip **58** work in conjunction to substitute the custimized audio files stored in the audio file storage memory **60** for the standard output files housed machine is interupted and the customized audio file is output in place thereof. The output lines from the digital to analog converter unit **64** feed into the slot machine amplifier such that when a signal is sent from the digital to analog converter unit, the sound the slot machine is attempting to issue is preempted and the customized sound byte is substituted. The actual interrupt mechanism can be of any suitable kind, but in the preferred embodiment, the interrupt mechanism would include an OP AMP to which the sound output line for the slot machine is connected and routed through. The op amp is also connected to the output of the digital to analog converter **64**. When no audio file is sent out by the digital to analog converter **64**, the sound output line is free to send the sound file data through to the amplifier. If an audio file is sent from the digital to analog converter **64**, a voltage is built on the op amp input connected to the digital to analog converter **64** which causes the op amp to select the signal coming in on that input and disregard the signal from the sound output line. Once the audio stops, the voltage on the op amp input drains off and the input from the sound output line is re-selected.

The audio file storage memory device **60** is preferably a two megabyte PC/MCIA ram card which can be quickly and easily reprogrammed to include a variety of audio files. Of course, RAM and EPROM chips of any size could also be used, but is preferred that the PC/MCIA card be used for the ease of reprogrammability mentioned previously. Programming of a PC/MCIA card would be performed in a manner consistent with common programming techniques which would be understood by those skilled in the art of programming such cards. Preferably, the audio files would be stored in .WAV format (wave files) in memory. When a start address and length of file for a selected wave file is sent to the inputs of the audio file storage memory device **60**, the data at that location and thereafter for the specified length is downloaded onto the data buss to the digital to analog converter **64**. The digital bytes downloaded are taken in by the digital to analog converter **64** to create a voltage which varies between 0 and 5 volts in 256 discreet steps. This change in voltage results in an audio wave that when sent into an amplifier will become the original sampled sound. Of course, the number and length of the stored audio files may be increased by adding byte size to the audio file storage memory device **60** but it is believed that 2 megabytes of memory (which, when played at a low sampling rate may give 5 to 6 minutes of replayed sound) be sufficient for most, if not all, intended purposes of the present invention.

The above describes the main function of the programmable sound card **10**. The programmable sound card **10** is designed to be retrofitted onto currently existing slot machines, although it could be easily used with newly manufactured machines and installed during the manufacturing process. The programmable sound card **10** provides a system by which each casino location may individualize some or all of the gaming devices on the casino floor by having the gaming device output particular sounds in response to machine events, those sounds differing from the factory preset sounds programmed into the slot machine. Such programmability clearly provides advantages for casino operators, including potential increase of coin in and further identification of the casino itself.

Of course, while the present invention has been described as including three separate programmable microcontroller chips, the three chips (the event detection sampling chip, the main CPU and the memory manager chip) could be combined and programmed onto a single central processing chip with the three separate chips represented thereon as three interconnected program sections. The advantage to such an arrangement is that the sound card **10** may be of simpler physical construction, but a disadvantage may be that the speed of the sound card is slightly compromised by the single chip design.

One additional feature of the present invention is that a number of programmable sound cards **10** of the present invention may be connected together in a network system such that downloads of new audio files may be coordinated from a central location. Shown in FIGS. **1–3** are two sets of address DIP switches **72** and **74** that can be read by the main CPU chip **56**. These can be used for various purposes, but are intended to provide a way to identify each individual programmable sound card **10** with its own address. The 16

bits of the address DIP switches would allow a potential 64,535 units to be individually addressed by a central computer system.

Also, to provide such a network system, the individual cards must be hardwired to one another, which may cause a problem in already-existing casino locations. Obviously, if a new casino is being built, the casino floor can be constructed to include such hardwiring. For existing casinos, however, an alternative solution must be devised.

Most casinos are now wired for player's club information, in which the player enters his or her personal information into the system through a card format at the machine itself. This information is used by the casino to track slot machine activity and award bonuses or "comps" to big players. The most common system in use is a standard ASYNC communications protocol identical to that used in the RS-232 standard, and is made by IGT (the S.M.A.R.T. system). Most casinos use a 4-wire shielded cable for the S.M.A.R.T. system, and that 4th wire is not used for data transportation. In some situations that 4th wire of the IGT system (a ground) can be used to transfer data to and from the programmable sound card **10** installed in the slot machine. By using the one free wire no extra wire need be run thus allowing installation of the network into an existing S.M.A.R.T. system setup. Normal 3 wire systems can be used for other areas where wires can be run without presenting installation problems.

The network system is to allow the upload and download of audio files, event tables, special event sounds and advertisements. By linking the units in network, each unit can be updated remotely. While the network system has been described in general terms above, the implementation and function of such a system will not be described herein.

It is to be understood that numerous additions, modifications, and substitutions may be made to the programmable sound card **10** of the present invention which fall within the intended broad scope of the appended claims. For example, the three microprocessors, the event detection sampling chip **12**, main CPU **56**, and memory manager chip **58**, may potentially be combined into a single microprocessor chip programmed to perform the functions of each of the three chips **12**, **56**, and **58**. Furthermore, the specific object code used to program the microprocessors may be modified or changed in many ways so long as the function of each of the elements of the programmable sound card **10** are able to function in an efficient manner. Also, the read-only detection devices of the present invention, described herein as optical interfaces, may be modified, changed or replaced entirely with read-only detection devices which fulfill the intended function of identification of event occurrences and transfer of that information to the programmable sound card **10**. Possibilities include optical readers which read the reel combinations produced by the machine and electromagnetic pulse detectors for detection of event occurrence signals. Finally, the exact design of the programmable sound card **10** may be rearranged or modified as necessary to fit within the slot machine board environment.

There has thus been shown and described a programmable sound card **10** which accomplishes at least all of the stated objectives.

I claim:

1. A programmable sound producing device for an electronic apparatus, said device comprising;

at least one read-only detection device adopted for connection to an electronic apparatus, said read-only detection means operative to detect selected event occurrences on an electronic apparatus and output event occurrence notification signals upon detection of an event;

event detection sampling means comprising a programmed microcontroller chip in information transmission connection with said read-only detection means, said event detection sampling means operative to detect and receive event occurrence notification signals from said detection means, analyze said event occurrence notification signals and output event occurrence information signals including information specifying event occurrences;

an event occurrence information signal computing device in information transmission connection with said event detection sampling means, said signal computing means operative to receive and analyze said event occurrence information signals output by said event detection sampling means and upon detection of selected event occurrence information signals, output sound generation command signals for initiating generation of selected sounds by said programmable sound producing device;

a read/write audio file storage memory device in information transmission connection with said programmable event occurrence information signal computing means, said read/write sound storage memory means operative to store audio file in retrievable form, said audio file memory means accessing and outputting selected audio signals in response to reception of sound generation command signals; and

an audio file output device in information transmission connection with said audio file storage memory means for transferring said selected audio signals from said read/write audio file storage memory means to a sound producing device, said audio file output means operative to convert said audio signals to a format for driving a sound producing device.

2. The programmable sound producing device of claim **1** wherein said read-only detection means comprise optical interfaces including two input lines, a first event occurrence line and steady voltage line, said lines connected to one another by a light-emitting diode capable of emitting a light pulse upon said event occurrence line signaling an event occurrence, said light pulse emitted by said light-emitting diode being detected by a light-sensitive transistor spaced from said light-emitting diode, the output end of said light-sensitive transistor further connected to the base of a second transistor operative to output one of said event occurrence notification signals to said event detection sampling means whereby said optical interface transfers an exact duplicate of the event occurrence signal output from an electronic apparatus to said event detection sampling means, said signal being sampled in a non-intrusive manner.

3. The programmable sound producing device of claim **1** wherein said event detection sampling means is operative to receive and analyze said event occurrence signals output by an electronic apparatus to determine the specific event that has occurred in an electronic apparatus, said event detection sampling means operative to store said event in data storage registers within said event detection sampling means.

4. The programmable sound producing device of claim **3** wherein said event occurrence information signal computing means comprises a programmable microcontroller chip programmed to scan said data storage registers within said event detection sampling means and remove, identify and compare a selected event occurrence notification signal found within a selected data storage register of said event detection sampling means with a table of event occurrence numbers preloaded into data storage registers within said event occurrence information signal computing means, said

table of numbers corresponding to selected event occurrence information signals which in turn correspond to particular event occurrences on an electronic apparatus.

5. The programmable sound producing device of claim **4** wherein said event occurrence information signal computing means further is operative to identify a match of an event occurrence information signal and an event occurrence number within said registers of said event occurrence information signal computing means, said event occurrence information signal computing means operative to output one of said sound generation command signals related to said event occurrence number.

6. The programmable sound producing device of claim **5** wherein said read/write audio file storage memory means comprises a programmable microcontroller chip programmed to track the starting and ending points and the playback speed of said audio files, and further comprises an audio file storage device for storing said audio files.

7. The programmable sound producing device of claim **6** wherein said audio file storage device comprises a PC/MCIA memory card.

8. The programmable sound producing device of claim **1** wherein said audio file output means comprises in combination a digital to analog converter unit operative to convert said audio files downloaded from said audio file storage memory means into an audio wave, and an amplifier/loudspeaker system operative to amplify said audio wave for outputting said audio wave as the original sampled sound.

9. A programmable sound card for a slot machine, said sound card comprising;

at least one read-only detection device operative to detect selected event occurrences on a slot machine and output event occurrence notification signals upon detection of an event;

event detection sampling means in information transmission connection with said read-only detection devices, said event detection sampling means operative to detect and receive event occurrence notification signals from said detection devices, analyze said event occurrence notification signals and output event occurrence information signals including information specifying event occurrences;

event occurrence information signal computing means in information transmission connection with said event detection sampling means, said signal computing means operative to receive and analyze said event occurrence information signals output by said event detection sampling means and upon detection of selected event occurrence information signals, output sound generation command signals for initiating generation of selected sounds by said programmable sound card;

memory manager means in information transmission connection with said event occurrence information signal computing means, said memory manager means operative to store audio file location, length and playback speed information, said memory manager means further operative to initiate playback of selected audio files in response to reception of sound generation command signals;

audio file storage means in information transmission connection with said memory manager means, said audio file storage means operative to store audio files in retrievable form, said audio file storage means operative to output selected audio files upon reception of initiation commands from said memory manager means; and

audio file output means in information transmission connection with said audio file storage means for transferring said selected audio files from said audio file storage means to a sound producing device, said audio file output means operative to convert said audio signals to a format for driving a sound producing device.

10. A programmable sound card for a gaming device, said sound card comprising;

at least one detection device operative to detect selected event occurrences on a gaming device and output event occurrence notification signals upon detection of an event;

central processing means in information transmission connection with said detection devices, said central processing means including an event detection sampling section, an event occurrence information signal computing section and a memory manager section;

said event detection sampling section in information transmission connection with said detection devices, said event detection sampling section operative to detect and receive event occurrence notification signals from said detection devices, analyze said event occurrence notification signals and output event occurrence information signals including information specifying event occurrences;

said event occurrence information signal computing section in information transmission connection with said event detection sampling section, said signal computing section operative to receive and analyze said event occurrence information signals output by said event detection sampling section and upon detection of selected event occurrence information signals, output sound generation command signals for initiating generation of selected sounds by said programmable sound card;

said memory manager section in information transmission connection with said event occurrence information signal computing section, said memory manager section operative to store audio file location, length and playback speed information, said memory manager section further operative to initiate playback of selected audio files in response to reception of sound generation command signals;

audio file storage means in information transmission connection with said memory manager section of said central processing means, said audio file storage means operative to store audio files in retrievable form, said audio file storage means operative to output selected audio files upon reception of initiation commands from said memory manager means; and

audio file output means in information transmission connection with said audio file storage means for outputting said audio files.

* * * * *