(12) INTERNATIONAL APPLICATION PUBLISHED UNDER THE PATENT COOPERATION TREATY (PCT)

(19) World Intellectual Property Organization
International Bureau

(43) International Publication Date
16 January 2014 (16.01.2014)

WIPO | PCT

(10) International Publication Number
WO 2014/011276 A2

(51) **International Patent Classification**:
F01D 5/18 (2006.01)

(21) **International Application Number**:
PCT/US2013/036056

(22) **International Filing Date**:
11 April 2013 (11.04.2013)

(25) **Filing Language**: English

(26) **Publication Language**: English

(30) **Priority Data**:
13/466,508 8 May 2012 (08.05.2012) US

(71) **Applicant**: **GENERAL ELECTRIC COMPANY** [US/US]; 1 River Road, Schenectady, NY 12345 (US).

(72) **Inventors**: **BERGHOLZ Jr., Robert Frederick**; 6766 Little River Lane, Loveland, OH 45140 (US). **DURSTOCK, Daniel Lee**; 439 Pickett Dr, Fort Wright, KY 41011 (US).

(74) **Agents**: **DOMBROWSKI, Joanna, M.** et al.; General Electric Company, Global Patent Operation, 2 Corporate Drive, Suite 648, Shelton, CT 06484 (US).

(81) **Designated States** *(unless otherwise indicated, for every kind of national protection available)*: AE, AG, AL, AM, AO, AT, AU, AZ, BA, BB, BG, BH, BN, BR, BW, BY, BZ, CA, CH, CL, CN, CO, CR, CU, CZ, DE, DK, DM, DO, DZ, EC, EE, EG, ES, FI, GB, GD, GE, GH, GM, GT, HN, HR, HU, ID, IL, IN, IS, JP, KE, KG, KM, KN, KP, KR, KZ, LA, LC, LK, LR, LS, LT, LU, LY, MA, MD, ME, MG, MK, MN, MW, MX, MY, MZ, NA, NG, NI, NO, NZ, OM, PA, PE, PG, PH, PL, PT, QA, RO, RS, RU, RW, SC, SD, SE, SG, SK, SL, SM, ST, SV, SY, TH, TJ, TM, TN, TR, TT, TZ, UA, UG, US, UZ, VC, VN, ZA, ZM, ZW.

(84) **Designated States** *(unless otherwise indicated, for every kind of regional protection available)*: ARIPO (BW, GH, GM, KE, LR, LS, MW, MZ, NA, RW, SD, SL, SZ, TZ, UG, ZM, ZW), Eurasian (AM, AZ, BY, KG, KZ, RU, TJ, TM), European (AL, AT, BE, BG, CH, CY, CZ, DE, DK, EE, ES, FI, FR, GB, GR, HR, HU, IE, IS, IT, LT, LU, LV, MC, MK, MT, NL, NO, PL, PT, RO, RS, SE, SI, SK, SM, TR), OAPI (BF, BJ, CF, CG, CI, CM, GA, GN, GQ, GW, ML, MR, NE, SN, TD, TG).

Declarations under Rule 4.17:

— *as to applicant's entitlement to apply for and be granted a patent (Rule 4.17(ii))*

— *as to the applicant's entitlement to claim the priority of the earlier application (Rule 4.17(iii))*

Published:

— *without international search report and to be republished upon receipt of that report (Rule 48.2(g))*

(54) **Title**: TURBINE AIRFOIL TRAILING EDGE BIFURCATED COOLING HOLES

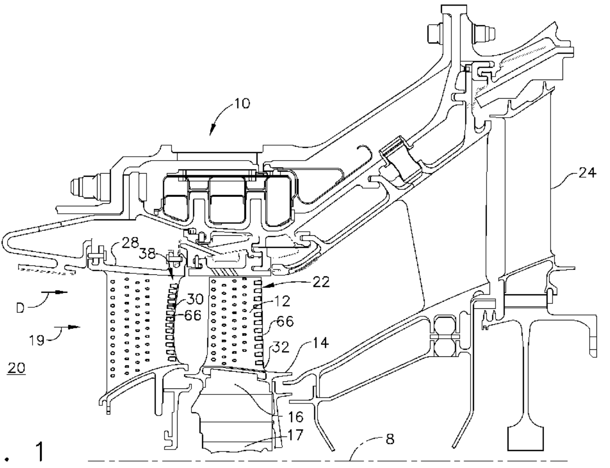

FIG. 1

(57) **Abstract**: A gas turbine engine turbine airfoil having pressure and suction sidewalls extending outwardly along a span and chordwise between opposite leading and trailing edges. A spanwise row of spaced apart bifurcated trailing edge cooling holes encased in the pressure sidewall end at corresponding trailing edge cooling slots extending chordally substantially to the trailing edge. Axially extending inter-hole partitions separate the cooling holes. An inlet between adjacent pairs of the inter-hole partitions includes a divergent inlet section. An axial intra-hole partition bifurcates the cooling hole into diverging upper and lower diverging sections downstream and aft of the divergent inlet section. A forward end of the intra-hole partition divides an aft end of the divergent inlet section into upper and lower inlet flowpaths leading to the upper and lower diverging sections leading into the trailing edge cooling slots.

WO 2014/011276 A2

TURBINE AIRFOIL TRAILING EDGE BIFURCATED COOLING HOLES

BACKGROUND OF THE INVENTION

FIELD OF THE INVENTION

[0001] The present invention relates generally to gas turbine engine turbine airfoil cooling and, more specifically, to turbine airfoil trailing edge cooling slots.

DESCRIPTION OF RELATED ART

[0002] In a gas turbine engine, air is pressurized in a compressor and mixed with fuel in a combustor for generating hot combustion gases. The hot gases are channeled through various stages of a turbine which extract energy therefrom for powering the compressor and producing work, such as powering an upstream fan in a typical aircraft turbofan engine application.

[0003] The turbine stages include stationary turbine nozzles having a row of hollow vanes which channel the combustion gases into a corresponding row of rotor blades extending radially outwardly from a supporting rotor disk. The vanes and blades have corresponding hollow airfoils with corresponding cooling circuits therein.

[0004] The cooling air is typically compressor discharge air which is diverted from the combustion process and, therefore, decreases overall efficiency of the engine. The amount of cooling air must be minimized for maximizing the efficiency of the engine, but sufficient cooling air must nevertheless be used for adequately cooling the turbine airfoils for maximizing their useful life during operation. Each airfoil includes a generally concave pressure sidewall and, an opposite, generally convex suction sidewall extending longitudinally or radially outwardly along a span from an airfoil base to an airfoil tip and axially in chordwise direction between leading and trailing edges. For a turbine blade, the airfoil span extends from a root at the radially inner platform to a radially outer tip spaced from a surrounding turbine shroud. For a turbine vane, the airfoil extends from a root integral with a radially inner band to a radially outer tip integral with an outer band.

[0005] Each turbine airfoil also initially increases in thickness aft of the leading edge and then decreases in thickness to a relatively thin or sharp trailing edge where the pressure and suction sidewalls join together. The wider portion of the airfoil has sufficient internal space for accommodating various forms of internal cooling circuits and turbulators for enhancing heat transfer cooling inside the airfoil, whereas, the relatively thin trailing edge has correspondingly limited internal cooling space.

[0006] Each airfoil typically includes various rows of film cooling holes extending through the sidewalls thereof which discharge the spent cooling air from the internal circuits. The film cooling holes are typically inclined in the aft direction toward the trailing edge and create a thin film of cooling air over the external surface of the airfoil that provides a thermally insulating air blanket for additional protection against the hot combustion gases which flow over the airfoil surfaces during operation.

[0007] The thin trailing edge is typically protected by a row of trailing edge cooling slots which breach the pressure sidewall at a breakout immediately upstream of the trailing edge for discharging film cooling air thereover. Each trailing edge cooling slot has an outlet aperture in the pressure side which begins at a breakout and may or may not be bounded in the radial direction by exposed lands at aft ends of axially extending partitions which define the cooling slots.

[0008] The axial partitions may be integrally formed with the pressure and suction sides of the airfoil and themselves must be cooled by the air discharged through the cooling slots defined thereby. The partitions typically converge in the aft direction toward the trailing edge so that the cooling slots diverge toward the trailing edge with a shallow divergence angle that promotes diffusion of the discharged cooling air with little if any flow separation along the sides of the partitions.

[0009] Aerodynamic and cooling performance of the trailing edge cooling slots is directly related to the specific configuration of the cooling slots and the intervening partitions. The flow area of the cooling slots regulates the flow of cooling air discharged through the cooling slots, and the geometry of the cooling slots affects cooling performance thereof.

[0010] The divergence or diffusion angle of the cooling slots can effect undesirable flow separation of the discharged cooling air which would degrade performance and cooling effectiveness of the discharged air. This also increases losses that impact turbine efficiency. Portions of the thin trailing edge directly under the individual cooling slots are effectively cooled by the discharged cooling air, with the discharged air also being distributed over the intervening exposed lands at the aft end of the partitions. The lands are solid portions of the pressure sidewall integrally formed with the suction sidewall and must rely for cooling on the air discharged from the adjacent trailing edge cooling slots.

[0011] Notwithstanding, the small size of the these outlet lands and the substantial cooling performance of the trailing edge cooling slots, the thin trailing edges of turbine airfoils nevertheless typically limit the life of those airfoils due to the high operating temperature thereof in the hostile environment of a gas turbine engine.

[0012] Accordingly, it is desired to provide a turbine airfoil having improved trailing edge cooling and cooling slots for improving airfoil durability and engine performance. It is also desired to minimize the amount of cooling flow used for trailing edge cooling in order to maximize fuel efficiency of the turbine and the engine.

SUMMARY OF THE INVENTION

[0013] A gas turbine engine turbine airfoil includes widthwise spaced apart pressure and suction sidewalls extending outwardly along a span from an airfoil base to an airfoil tip and extend chordwise between opposite leading and trailing edges. A spanwise row of spanwise spaced apart bifurcated trailing edge cooling holes are encased in the pressure sidewall and end at corresponding spanwise spaced apart trailing edge cooling slots extending chordally substantially to the trailing edge. The cooling holes are separated from each other by axially extending inter-hole partitions. Each of the cooling holes include a convergent divergent inlet between adjacent pairs of the inter-hole partitions. The convergent divergent inlet includes in downstream serial cooling flow relationship a convergent inlet section, a throat, and a divergent inlet section. An axial intra-hole partition extending downstream towards the trailing edge bifurcates the cooling hole into spanwise spaced apart and spanwise diverging upper and lower diverging sections downstream and aft of the divergent inlet section. A forward end of the intra-hole partition divides or splits an aft or downstream end of the divergent inlet section into spanwise spaced apart upper and lower inlet flowpaths leading to the upper and lower diverging sections respectively. The upper and lower diverging sections lead into the trailing edge cooling slot.

[0014] The inlet may be a constant area inlet upstream of the divergent inlet section. The constant area inlet has a downstream extending first length and includes a metering section having a constant area flow cross section, a constant width, and a constant height through the entire first length.

[0015] The pressure and suction sidewalls include pressure and suction sidewall surfaces respectively in the hole and the pressure sidewall surface may be planar through the entire upper and lower diverging sections. The width may be constant through the upper and lower diverging sections of the hole.

[0016] Lands may be disposed between spanwise adjacent ones of the trailing edge cooling slots and slot floors may be disposed in the trailing edge cooling slots between the lands. The lands may be coplanar or flush with an external surface of the pressure sidewall around each of the cooling slots. Alternatively, the lands angled away from the external surface by a land angle in a range between 0-5 degrees.

[0017] The diverging sections may have a race track shaped flow cross section. The race track shaped flow cross section includes a rectangular section between spanwise spaced apart rounded or semi-circular inner and outer end sections having corner radii. Fillets having fillet radii are in slot corners between the lands and the slot floors and the fillet radii are substantially the same size as the corner radii of the flow cross section.

[0018] At least one of the upper and lower diverging sections may include raised floors extending downstream and at least partially through the cooling slots. Each of the raised floors includes, in downstream serial relationship, a flat or curved up ramp in the upper and lower diverging sections, a flat or curved down ramp in the trailing edge cooling slot, and a transition section between the up and down ramps. The up ramp ramps up from the suction sidewall surface in the upper and lower diverging sections. The down ramp ramps down and extends downstream from the transition section to the trailing edge.

[0019] The lands may be angled towards the slot floor and away from the external surface of the pressure sidewall and the lands and intercept the slot floor upstream of the trailing edge.

BRIEF DESCRIPTION OF THE DRAWINGS

[0020] The foregoing aspects and other features of the invention are explained in the following description, taken in connection with the accompanying drawings where:

[0021] FIG. 1 is a longitudinal, sectional view illustration of an exemplary embodiment of turbine vane and rotor blade airfoils having bifurcated cooling holes culminating at spanwise spaced apart trailing edge cooling slots.

[0022] FIG. 2 is an enlarged view illustration of a blade illustrated in FIG. 1.

[0023] FIG. 3 is a pressure side sectional view illustration of cooling holes with a bifurcated inlet followed by bifurcated diffusing sections leading into two of the trailing edge cooling slots illustrated in FIG. 2.

[0024] FIG. 4 is a cross sectional schematical view illustration of one of the two diffusing sections and its corresponding trailing edge cooling slot taken through 4-4 in FIG. 3.

[0025] FIG. 5 is an upstream looking perspective view illustration of the trailing edge cooling slots illustrated in FIG. 3.

[0026] FIG. 6 is a cross sectional schematical view illustration of an elongated flow cross section in the constant width metering section taken through 6-6 in FIG. 3.

[0027] FIG. 7 is a cross sectional schematical view illustration of an elongated flow cross section in the diffusing section taken through 7-7 in FIG. 3.

[0028] FIG. 8 is a cross sectional schematical view illustration of a race track shaped flow cross section having four equal corner radii.

[0029] FIG. 9 is a cross sectional schematical view illustration of an alternative race track shaped flow cross section with a larger width to height ratio than the race track shaped flow cross section illustrated in FIG. 8.

[0030] FIG. 10 is a cross sectional schematical view illustration of an alternative flow cross section with unequal top and bottom corner radii.

[0031] FIG. 11 is a cross sectional schematical view illustration of another alternative flow cross section with in elongated and fully curved and includes curved quarter sides.

[0032] FIG. 12 is a cross sectional schematical view illustration of curved up and down ramps of a raised floor in the cooling holes and the trailing edge cooling slots.

[0033] FIG. 13 is a pressure side sectional view illustration of an alternative inlet with a constant width and constant height metering section.

[0034] FIG. 14 is a perspective view illustration of one of the metering section in FIG. 3.

DETAILED DESCRIPTION OF THE INVENTION

[0035] Illustrated in FIG. 1 is an exemplary gas turbine engine high pressure turbine stage 10 circumscribed about an engine centerline axis 8 and positioned between a combustor 20 and a low pressure turbine (LPT) 24. The combustor 20 mixes fuel with pressurized air for generating hot combustion gases 19 which flows downstream through the turbines.

[0036] The high pressure turbine stage 10 includes a turbine nozzle 28 upstream of a high pressure turbine (HPT) 22 through which the hot combustion gases 19 are discharged into from the combustor 20. The exemplary embodiment of the high pressure turbine 22 illustrated herein includes at least one row of circumferentially spaced apart high pressure turbine blades 32. Each of the turbine blades 32 includes a turbine airfoil 12 integrally formed with a platform 14 and an axial entry dovetail 16 used to mount the turbine blade on a perimeter of a supporting rotor disk 17.

[0037] Referring to FIG. 2, the airfoil 12 extends radially outwardly along a span S from an airfoil base 34 on the blade platform 14 to an airfoil tip 36. During operation, the hot combustion gases 19 are generated in the engine and flow downstream over the turbine airfoil 12 which extracts energy therefrom for rotating the disk supporting the blade for powering the compressor (not shown). A portion of pressurized air 18 is suitably cooled and flowed to the blade for cooling thereof during operation.

[0038] The airfoil 12 includes widthwise spaced apart generally concave pressure and convex suction sidewalls 42 and 44. The pressure and suction sidewalls 42, 44 extend longitudinally or radially outwardly along the span S from the airfoil base 34 to the airfoil tip 36. The sidewalls also extend axially in a chordwise direction C between opposite leading and trailing edges LE, TE. The airfoil 12 is hollow with the pressure and suction sidewalls 42, 44 being spaced widthwise or laterally apart between the leading and trailing edges LE, TE to define an internal cooling cavity or circuit 54 therein for circulating pressurized cooling air or coolant flow 52 during operation. The pressurized cooling air or coolant flow 52 is from the portion of pressurized air 18 diverted from the compressor.

[0039] The turbine airfoil 12 increases in width W or widthwise from the leading edge LE to a maximum width aft therefrom and then converges to a relatively thin or sharp trailing edge TE. The size of the internal cooling circuit 54 therefore varies with the width W of the airfoil, and is relatively thin immediately forward of the trailing edge where the two sidewalls integrally join together and form a thin trailing edge portion 56 of the airfoil 12. Spanwise spaced apart trailing edge cooling slots 66 are provided at or near this thin trailing edge portion 56 of the airfoil 12 to cool it.

[0040] Referring to FIG. 3, a row 38 of spanwise spaced apart bifurcated trailing edge cooling holes 30 encased or buried and formed in the pressure sidewall 42 leading to corresponding ones of the spanwise spaced apart trailing edge cooling slots 66. The cooling holes 30 are separated radially along the span S from each other by downstream extending axial inter-hole partitions 80. The trailing edge cooling slots 66 extend chordally substantially to the trailing edge TE. The trailing edge cooling holes 30 are disposed along the span S of the trailing edge TE in flow communication with the internal cooling circuit 54 for discharging the coolant flow 52 therefrom during operation.

[0041] The trailing edge cooling holes 30 are illustrated in more particularity in FIG. 3. Each of the cooling holes 30 includes a convergent divergent inlet 70 located between adjacent pairs of the inter-hole partitions 80. The inlet 70 includes in downstream serial flow relationship a convergent inlet section 106, a throat 104, and a divergent inlet section 108. An axial intra-hole partition 68 extending downstream towards the trailing edge TE bifurcates the cooling hole 30 into spanwise spaced apart and spanwise diverging upper and lower diverging sections 102, 103 downstream and aft of the divergent inlet section 108. A forward end 72 of the intra-hole partition 68 divides or splits an aft or downstream end 110 of the divergent inlet section 108 into spanwise spaced apart upper and lower inlet flowpaths 112, 114 leading to the upper and lower diverging sections 102, 103 respectively. The forward end 72 of the partitions 68 is semi-circular having a base diameter 73 that defines the beginning of the upper and lower diverging sections 102, 103.

[0042] Each of the upper and lower diverging sections 102, 103 leads into one of the trailing edge cooling slots 66 and supplies the slot with cooling air or coolant flow 52 for film cooling. The trailing edge cooling slot 66 begins at a breakout 58 at a downstream end 69 of each of the upper and lower diverging sections 102, 103. The trailing edge cooling slot 66 embodiment illustrated herein diverges in a spanwise direction defined by the span S. The intra-hole partition 68 extends downstream from the upper and lower flowpaths 112, 114 of the downstream end 110 of the divergent inlet section 108 towards the trailing edge TE and separate the upper and lower diverging sections 102, 103 from each other.

[0043] Referring to FIGS. 3-5, a spanwise height H of each of the upper and lower diverging sections 102, 103 is defined between the upper and lower hole surfaces 46, 48 of the intra-hole and the inter-hole partitions 68, 80 respectively (as illustrated in FIG. 3). A hole width W of each of the upper and lower diverging sections 102, 103 is defined between pressure and suction sidewall surfaces 39, 40 of the pressure and suction sidewalls 42, 44 respectively in each of the upper and lower diverging sections 102, 103 as illustrated in FIG. 4. The trailing edge cooling slots 66 include a slot floor 51 open and exposed to the hot combustion gases 19 that pass through the high pressure turbine 22. The slot floor 51 extends for the entire third length L3 along the suction sidewall 44.

[0044] Referring to FIGS. 6 and 7, each of the upper and lower diverging sections 102, 103 has a generally spanwise elongated flow cross section 74 and the spanwise height H is substantially greater than the hole width W. Each of the upper and lower diverging sections 102, 103 has a height to width ratio H/W in a range of about 2:1 to 10:1 (see FIGS. 4-10). The pressure and suction sidewall surfaces 39, 40 of the pressure and suction sidewalls 42, 44 respectively widthwise bound the hole 30. The upper and lower diverging sections 102, 103 and the trailing edge cooling slots 66 have downstream extending second and third lengths L2 and L3 respectively as illustrated in FIG. 3.

[0045] The embodiment of the upper and lower diverging sections 102, 103 illustrated in FIG. 4 has a fixed or constant width W through the upper and lower diverging sections 102, 103 and the pressure and suction sidewall surfaces 39, 40 are parallel through the entire second length L2 of the upper and lower diverging sections 102, 103. The pressure sidewall surface 39 is flat or planar through the entire second length L2 of the diverging sections. In this embodiment of the cooling hole 30 the suction sidewall surface 40 is flat or planar through the entire upper and lower diverging sections 102, 103 and their corresponding second lengths L2. The slot floor 51 is coplanar with suction sidewall surface 40 in the hole 30. The upper and lower diverging sections 102, 103 or are of constant width W, in the embodiment of the trailing edge cooling holes 30 illustrated in FIG. 3 and schematically illustrated in solid line in FIG. 4. The upper and lower diverging sections 102, 103 diverge in the spanwise direction.

[0046] The upper and lower diverging sections 102, 103 of the cooling holes 30 lead into the trailing edge cooling slots 66 which breach the external surface 43 of the pressure sidewall 42 at a breakout lip 49 spaced forward or upstream from the trailing edge TE. Each trailing edge cooling slot 66 is radially or spanwise bounded by exposed lands 50 at aft ends 116 of the intra-hole and the inter-hole partitions 68, 80. As illustrated in solid line in FIG. 4, the lands 50 are coplanar or flush with the external surface 43 of the pressure sidewall 42 around each of the exposed cooling slot 66, including the common breakout lip 49 extending radially therebetween. This maximizes flow continuity of the pressure side of the airfoil.

[0047] Referring to FIGS. 4 and 5, slot surfaces 60 extend widthwise between the lands 50 along the slot floors 51. Fillets 62 in slot corners 64 between the lands 50 and the slot floors 51 have fillet radii RF that may be substantially the same size as bottom corner radii RT of the flow cross section 74 of the diverging sections 102 adjacent the bottom corner radii RT. The fillet radii RF helps with castability of the trailing edge cooling slots 66. The fillet radii RF helps improve cooling of the lands 50 by redistributing coolant flow 52 in the trailing edge cooling slots from the slot floor 51 to the lands 50 in order to make coolant flow 52 film coverage on the slot floors 51 and the lands 50 more uniformly.

[0048] Another embodiment of the lands 50 is illustrated in dashed line in FIG. 4 and provides for the lands 50 not being coplanar or flush with the external surface 43 of the pressure sidewall 42 around each of the exposed cooling slot 66. The lands 50 may be more angled towards the slot floor 51 and away from the external surface 43 of the pressure sidewall 42. The lands 50 may be angled away from the external surface 43 by a land angle A3 in a range between 0-5 degrees and the lands 50 may intercept the slot floor 51 upstream of the trailing edge TE.

[0049] The embodiment of the flow cross section 74 illustrated in FIGS. 3-6 has a race track shaped flow cross section 74 with the rectangular section 75 between spanwise or radially spaced apart rounded or semi-circular inner and outer end sections 82, 84. Four exemplary shapes suitable for the flow cross section 74 are illustrated in FIGS. 8-11. The race track shaped flow cross section 74 illustrated in FIG. 8 is spanwise elongated, has four equal corner radii R, and has a width to height ratio W/H in a range of 0.25-0.50. The race track shaped flow cross section 74 illustrated in FIG. 9 is spanwise elongated, has four equal corner radii R, and has a width to height ratio W/H in a range of 0.15-0.50. The race track shaped flow cross section 74 illustrated in FIG. 10 is similar to the one illustrated in FIG. 8 but has unequal top and bottom corner radii RB, RT. An exemplary range of a corner ratio RB/RT is 1-3. The race track shaped flow cross section 74 illustrated in FIG. 11 is spanwise elongated and fully curved and includes curved quarter sides 78 that may be elliptical, parabolic, or polynomial blends.

[0050] The cooling holes 30, trailing edge cooling slots 66, and lands 50 are cast in cooling features. Casting these features provides good strength, low manufacturing costs, and durability for the airfoil and blades and vanes. The race track shaped flow cross section 74 with the rectangular section 75 between spanwise or radially spaced apart rounded or semi-circular inner and outer end sections 82, 84 provides good cooling flow characteristics which reduces the amount of the coolant flow 52 needed to cool the airfoils. The corner radii R contribute to good cooling, castability, and strength of these cooling features and, in particular, help cool the lands 50 thus reducing the amount of the coolant flow 52 used.

[0051] The embodiments of the cooling hole 30 and the trailing edge cooling slot 66 illustrated in FIGS. 3 and 5 includes a diverging trailing edge cooling slot 66. The diverging upper and lower diverging sections 102, 103 and the corresponding trailing edge cooling slots 66 may diverge at different first and second diverging angles A1, A2 respectively as illustrated in FIG. 3. The spanwise height H of the diverging sections of the cooling hole 30 and the trailing edge cooling slots 66 increases in the downstream direction D. A more favorable flow angle relative to the lands for getting coolant flow 52 onto the lands at the breakout is set up by the expansion angle A1 of the diverging sections of the cooling hole 30 and the difference between the diverging angles of the cooling slots and the diverging sections, i.e., A2   A1.

[0052] The diverging upper and lower diverging sections 102, 103 expands the flow coverage at the breakout 58, redistributes coolant flow 52 in the trailing edge cooling slots from the slot floor 51 to the lands 50 in order to make coolant flow 52 film coverage on the slot floors 51 and the lands 50 more uniform. The constant width W of the diverging upper and lower diverging sections 102, 103 helps keep the coolant flow 52 fully attached in the diverging sections.

[0053] This in turn allows an increase surface area of the slot floor 51 and decrease in surface area of the lands 50. The constant width W upper and lower diverging sections 102, 103 helps set up a more favorable flow angle at the breakout relative to the lands 50 to get more coolant flow 52 onto the lands. The planar pressure sidewall surface 39 through the entire second length L2 of the upper and lower diverging sections 102, 103 also helps set up a more favorable flow angle at the breakout relative to the lands 50 to get more coolant flow 52 onto the lands. The constant width and separately the planar pressure sidewall surface 39 of the cooling hole 30 help keep the coolant flow 52 flow attached in the expansion section of the slot.

[0054] Another embodiment of the cooling hole 30 is illustrated in dashed line in FIG. 4 and provides for a variable width WV instead of a constant width W inside the upper and lower diverging sections 102, 103 of the hole 30 between the pressure and suction sidewall surfaces 39, 40 of the pressure and suction sidewalls 42, 44 respectively. The variable width WV is provided by a raised floor 88 that extends downstream through at least a part of the upper and lower diverging sections 102, 103 and into and at least partially through the cooling slot 66. The raised floor 88 includes in downstream serial relationship a flat or curved up ramp 90 in the upper and lower diverging sections 102, 103, a flat or curved down ramp 94 in the trailing edge cooling slot 66, and a transition section 92 between the up and down ramps 90, 94.

[0055] The flat up and down ramps 90, 94 are illustrated in FIG. 4 and the curved up and down ramps 90, 94 and curved transition section 92 are illustrated in FIG. 12. The up ramp 90 ramps up from the suction sidewall surface 40 in each of the upper and lower diverging sections 102, 103 and extends downstream. The down ramp 94 ramps down and extends downstream from the transition section 92 to the trailing edge TE. The transition section 92 may be flat or curved. The curved up and down ramps 90, 94 and the curved transition section 92 may be designed and constructed using Bezier splines.

[0056] This variable width WV upper and lower diverging sections 102, 103 of the hole 30 helps keep the exit velocity of the coolant flow 52 and the gas velocity of the hot combustion gases along the external surface 43 of the pressure sidewall 42 at the breakout about equal to minimize aero losses and resultant negative effect on turbine efficiency.

[0057] An alternative constant area inlet 70 is illustrated in FIGS. 13 and 14. The alternative inlet 70 includes a constant width W and constant height H metering section 100. The metering section 100 has a constant area flow cross section 74. The metering section 100 has a downstream extending first length L1, Downstream of the metering section 100 is the divergent inlet section 108 as illustrated in FIG. 3. The forward end 72 of the intra-hole partition 68 divides or splits the aft or downstream end 110 of the divergent inlet section 108 into the spanwise spaced apart upper and lower inlet flowpaths 112, 114 leading to the upper and lower diverging sections 102, 103 respectively as illustrated in FIG. 3.

[0058] The downstream extending first length L1 of the metering section 100 has a hydraulic diameter Dh = (4*A)/P, wherein A = flow area and P = "wetted" perimeter of the flow area of the metering section 100 as illustrated in FIG. 3. The metering section 100 illustrated herein has a preferred first length L1 equal up to one and one half times the hydraulic diameter (1.5*Dh).

[0059] The present invention has been described in an illustrative manner. It is to be understood that the terminology which has been used is intended to be in the nature of words of description rather than of limitation. While there have been described herein, what are considered to be preferred and exemplary embodiments of the present invention, other modifications of the invention shall be apparent to those skilled in the art from the teachings herein and, it is, therefore, desired to be secured in the appended claims all such modifications as fall within the true spirit and scope of the invention.

[0060] Accordingly, what is desired to be secured by Letters Patent of the United States is the invention as defined and differentiated in the following claims:

CLAIMS

1. A gas turbine engine turbine airfoil comprising:

widthwise spaced apart pressure and suction sidewalls extending outwardly along a span from an airfoil base to an airfoil tip;

the pressure and suction sidewalls extending chordwise between opposite leading and trailing edges;

a spanwise row of spanwise spaced apart bifurcated trailing edge cooling holes encased in the pressure sidewall and ending at corresponding spanwise spaced apart trailing edge cooling slots extending chordally substantially to the trailing edge;

axially extending inter-hole partitions spanwise separating the cooling holes from each other;

each of the cooling holes including an inlet between adjacent pairs of the inter-hole partitions;

the inlet including a divergent inlet section;

an axial intra-hole partition extending downstream towards the trailing edge bifurcating the cooling hole into spanwise spaced apart and spanwise diverging upper and lower diverging sections downstream and aft of the divergent inlet section;

a forward end of the intra-hole partition dividing or splitting an aft or downstream end of the divergent inlet section into spanwise spaced apart upper and lower inlet flowpaths leading to the upper and lower diverging sections respectively; and

the upper and lower diverging sections of each one of the cooling holes leading into a corresponding one of the trailing edge cooling slots.

2. The airfoil as claimed in claim 1 further comprising a spanwise height substantially greater than a hole width through the upper and lower diverging sections.

3. The airfoil as claimed in claim 2 further comprising pressure and suction sidewall surfaces of the pressure and suction sidewalls respectively in the hole and the pressure sidewall surface being planar through the entire upper and lower diverging sections.

4. The airfoil as claimed in claim 3 further comprising the width being constant through the upper and lower diverging sections.

5. The airfoil as claimed in claim 4 further comprising lands disposed between spanwise adjacent ones of the trailing edge cooling slots and slot floors in the trailing edge cooling slots between the lands.

6. The airfoil as claimed in claim 5 further comprising the lands angled away from the external surface by a land angle in a range between 0-5 degrees.

7. The airfoil as claimed in claim 5 further comprising the lands being coplanar or flush with an external surface of the pressure sidewall around each of the cooling slots.

8. The airfoil as claimed in claim 1 further comprising the inlet being a convergent divergent inlet including in downstream serial flow relationship a convergent inlet section, a throat, and the divergent inlet section.

9. The airfoil as claimed in claim 8 further comprising:

a spanwise height substantially greater than a hole width through the upper and lower diverging sections,

pressure and suction sidewall surfaces of the pressure and suction sidewalls respectively in the hole and the pressure sidewall surface being planar through the entire upper and lower diverging sections,

the width being constant through the upper and lower diverging sections, and lands disposed between spanwise adjacent ones of the trailing edge cooling slots and slot floors in the trailing edge cooling slots between the lands.

10. The airfoil as claimed in claim 9 further comprising the lands being coplanar or flush with an external surface of the pressure sidewall around each of the cooling slots.

11. The airfoil as claimed in claim 10 further comprising each of the upper and lower diverging sections and corresponding ones of the trailing edge cooling slots diverging at different first and second diverging angles respectively.

12. The airfoil as claimed in claim 5 further comprising:

each of the upper and lower diverging sections having a race track shaped flow cross section,

the race track shaped flow cross section including a rectangular section between spanwise spaced apart rounded or semi-circular inner and outer end sections,

the race track shaped flow cross section including a rectangular section between spanwise spaced apart rounded or semi-circular inner and outer end sections having corner radii,

fillets in slot corners between the lands and the slot floors, and

the fillets having fillet radii substantially the same size as the corner radii of the flow cross section.

13. The airfoil as claimed in claim 12 further comprising the lands being coplanar or flush with an external surface of the pressure sidewall around each of the cooling slots.

14. The airfoil as claimed in claim 12 further comprising the lands angled away from the external surface by a land angle in a range between 0-5 degrees.

15. The airfoil as claimed in claim 13 further comprising each of the upper and lower diverging sections and corresponding ones of the trailing edge cooling slots diverging at different first and second diverging angles respectively.

16. The airfoil as claimed in claim 5 further comprising each of the upper and lower diverging sections and corresponding ones of the trailing edge cooling slots diverging at different first and second diverging angles respectively.

17. The airfoil as claimed in claim 16 further comprising the lands being coplanar or flush with an external surface of the pressure sidewall around each of the cooling slots.

18. The airfoil as claimed in claim 16 further comprising the lands angled away from the external surface by a land angle in a range between 0-5 degrees.

19. The airfoil as claimed in claim 5 further comprising:

at least one of the cooling holes including a raised floor extending downstream through at least part of each of the diverging upper and lower diverging sections and into and at least partially through the corresponding cooling slot;

the raised floor including in downstream serial relationship a flat up ramp in the diverging section, a flat down ramp in the trailing edge cooling slot, and a transition section between the up and down ramps;

the up ramp ramping up from the suction sidewall surface and extending downstream; and

the down ramp ramping down and extending downstream from the transition section to the trailing edge.

20. The airfoil as claimed in claim 19 further comprising the lands being coplanar or flush with an external surface of the pressure sidewall around each of the cooling slots.

21. The airfoil as claimed in claim 20 further comprising the inlet being a convergent divergent inlet including in downstream serial flow relationship a convergent inlet section, a throat, and the divergent inlet section.

22. The airfoil as claimed in claim 21 further comprising:

a spanwise height substantially greater than a hole width through the upper and lower diverging sections,

pressure and suction sidewall surfaces of the pressure and suction sidewalls respectively in the hole and the pressure sidewall surface being planar through the entire upper and lower diverging sections,

the width being constant through the upper and lower diverging sections, and

lands disposed between spanwise adjacent ones of the trailing edge cooling slots and slot floors in the trailing edge cooling slots between the lands.

23. The airfoil as claimed in claim 22 further comprising each of the upper and lower diverging sections and corresponding ones of the trailing edge cooling slots diverging at different first and second diverging angles respectively.

24. The airfoil as claimed in claim 1 further comprising:

the inlet being a constant area inlet upstream of the divergent inlet section,

the inlet having a downstream extending first length,

the inlet including a metering section having a constant area flow cross section, and

metering section including a constant width and a constant height through the entire first length.

25. The airfoil as claimed in claim 24 further comprising:

a spanwise height substantially greater than a hole width through the upper and lower diverging sections,

pressure and suction sidewall surfaces of the pressure and suction sidewalls respectively in the hole and the pressure sidewall surface being planar through the entire upper and lower diverging sections,

the width being constant through the upper and lower diverging sections, and

lands disposed between spanwise adjacent ones of the trailing edge cooling slots and slot floors in the trailing edge cooling slots between the lands.

26. The airfoil as claimed in claim 25 further comprising the lands being coplanar or flush with an external surface of the pressure sidewall around each of the cooling slots.

27. The airfoil as claimed in claim 25 further comprising the lands angled away from the external surface by a land angle in a range between 0-5 degrees.

28. The airfoil as claimed in claim 26 further comprising each of the upper and lower diverging sections and corresponding ones of the trailing edge cooling slots diverging at different first and second diverging angles respectively.

29. The airfoil as claimed in claim 28 further comprising:

each of the upper and lower diverging sections having a race track shaped flow cross section,

the race track shaped flow cross section including a rectangular section between spanwise spaced apart rounded or semi-circular inner and outer end sections,

the race track shaped flow cross section including a rectangular section between spanwise spaced apart rounded or semi-circular inner and outer end sections having corner radii,

fillets in slot corners between the lands and the slot floors, and

the fillets having fillet radii substantially the same size as the corner radii of the flow cross section.

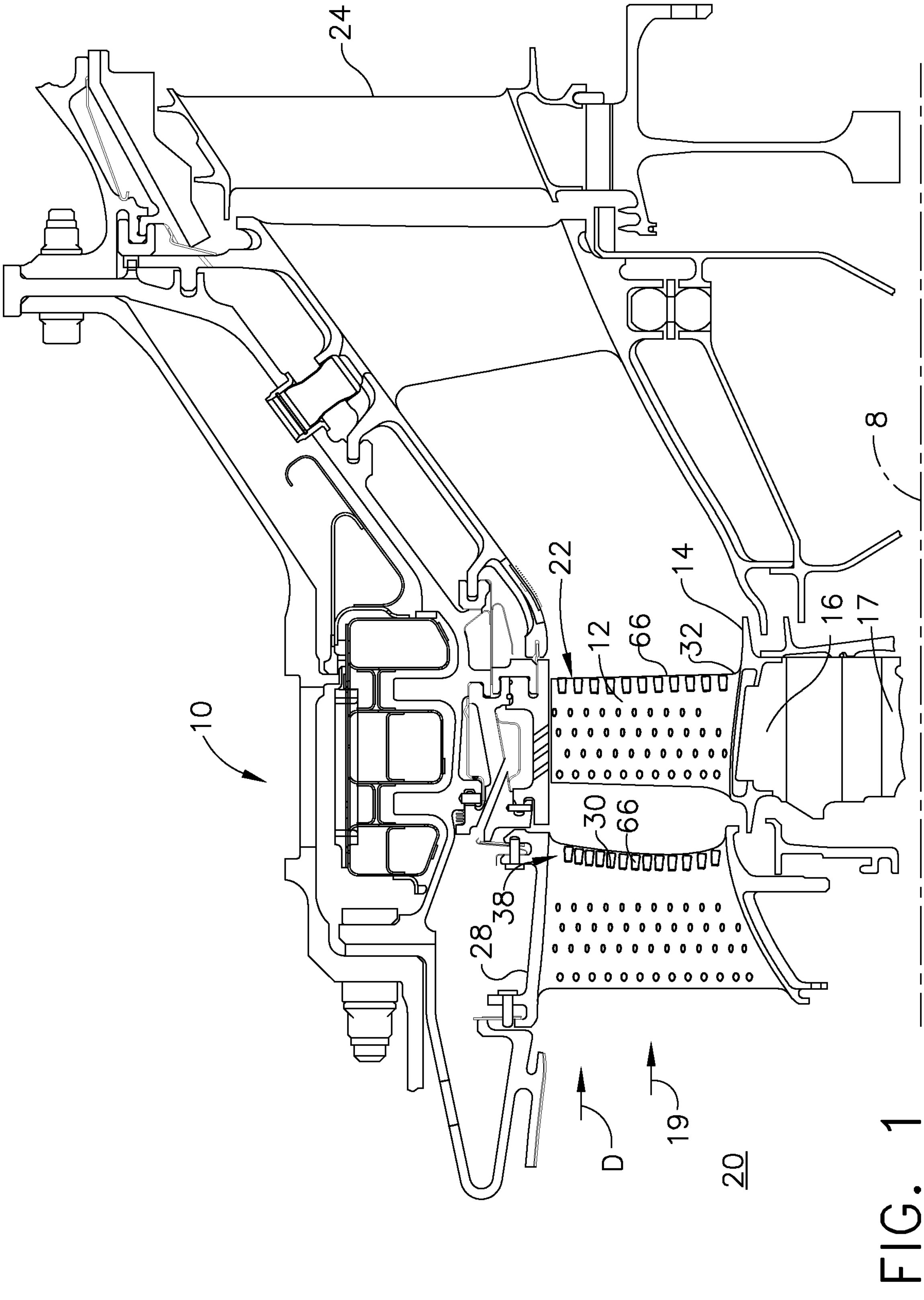

FIG. 1

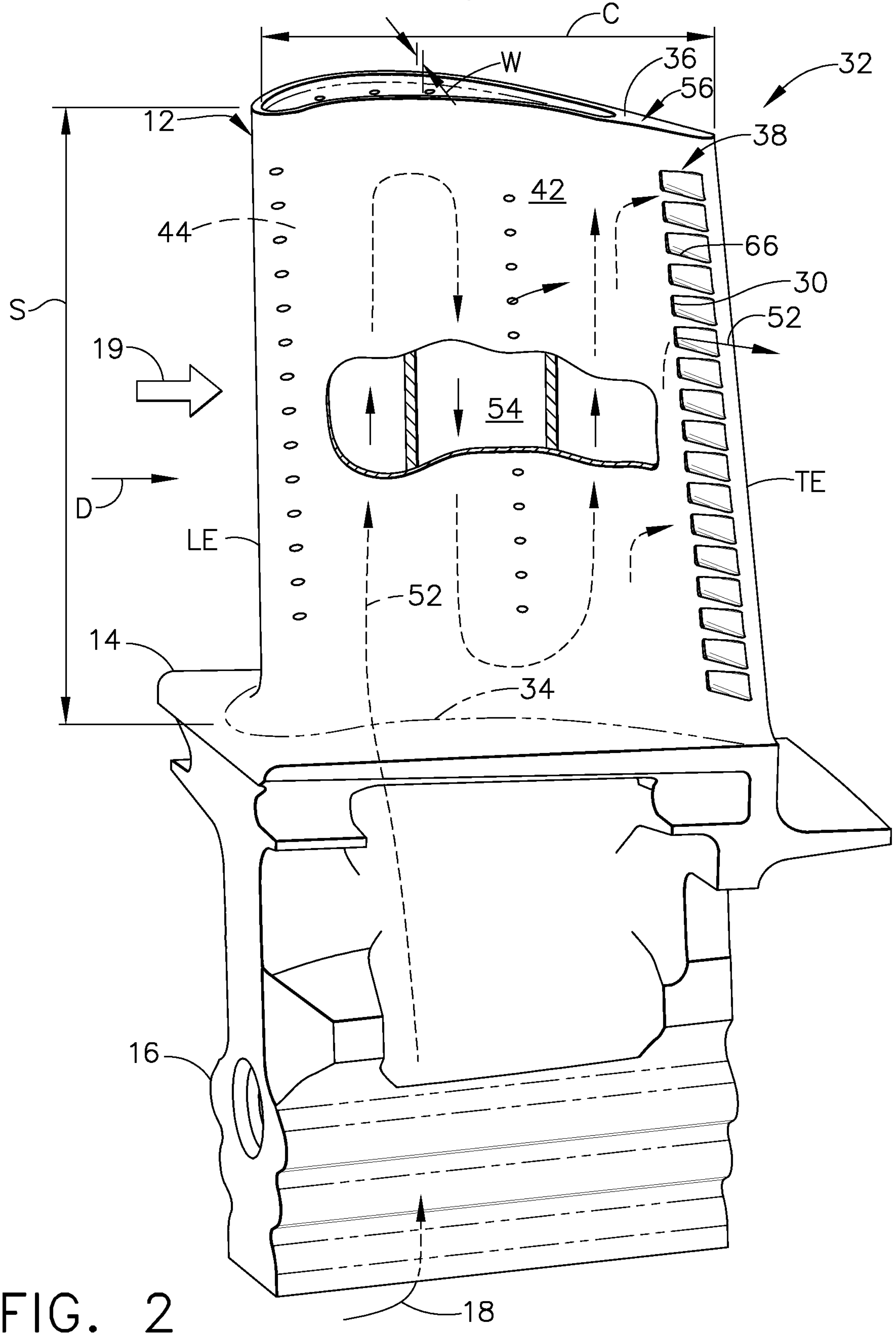

FIG. 2

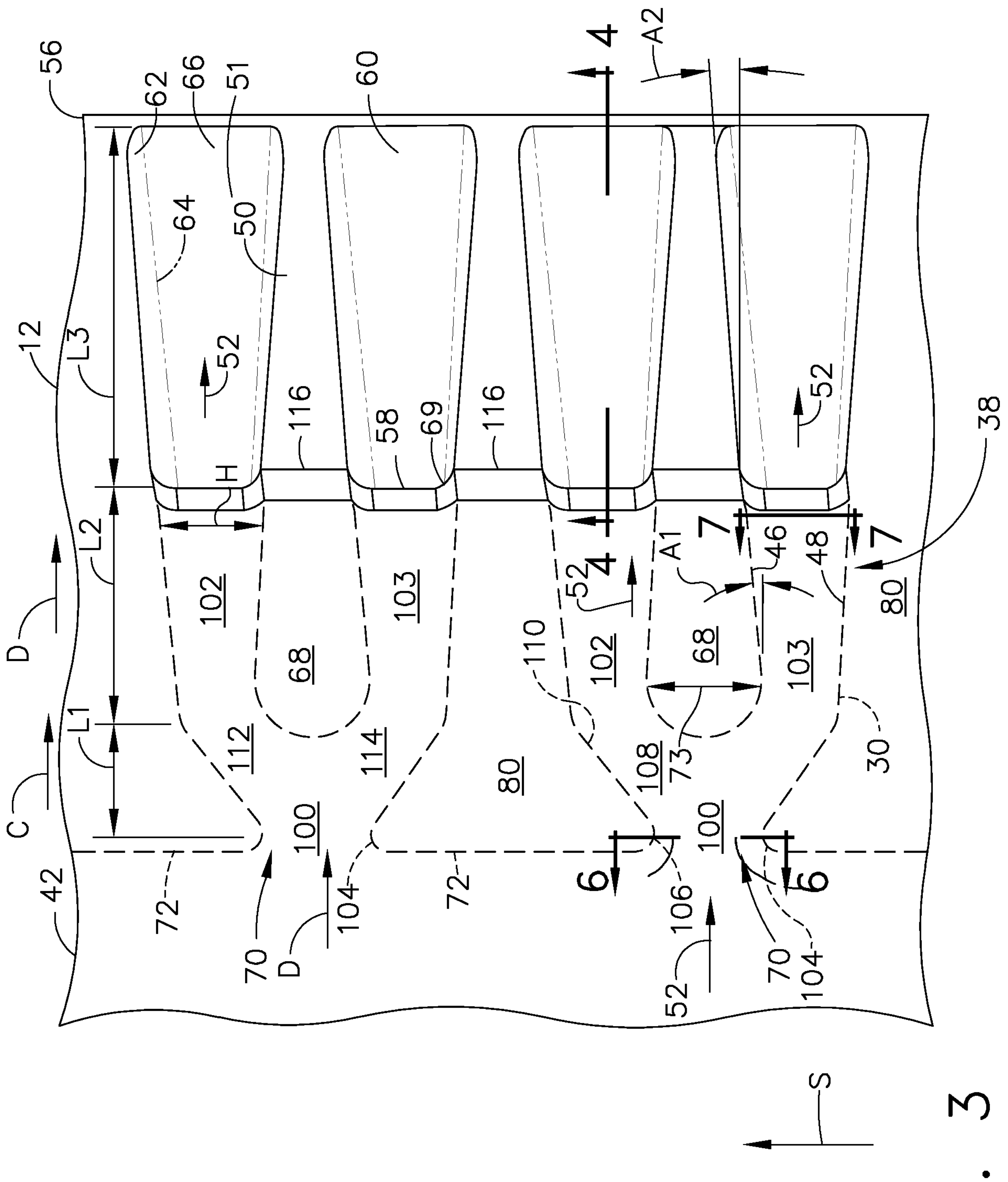
56
62
66
51
60
4
A2
64
50
12
L3
52
116
58
69
116
52
38
H
L2
7
46
48
7
4
A1
52
D
102
103
102
68
103
80
68
110
L1
112
114
80
108
73
30
C
100
100
6
6
42
72
72
104
106
70
D
104
52
70
104
S

FIG. 3

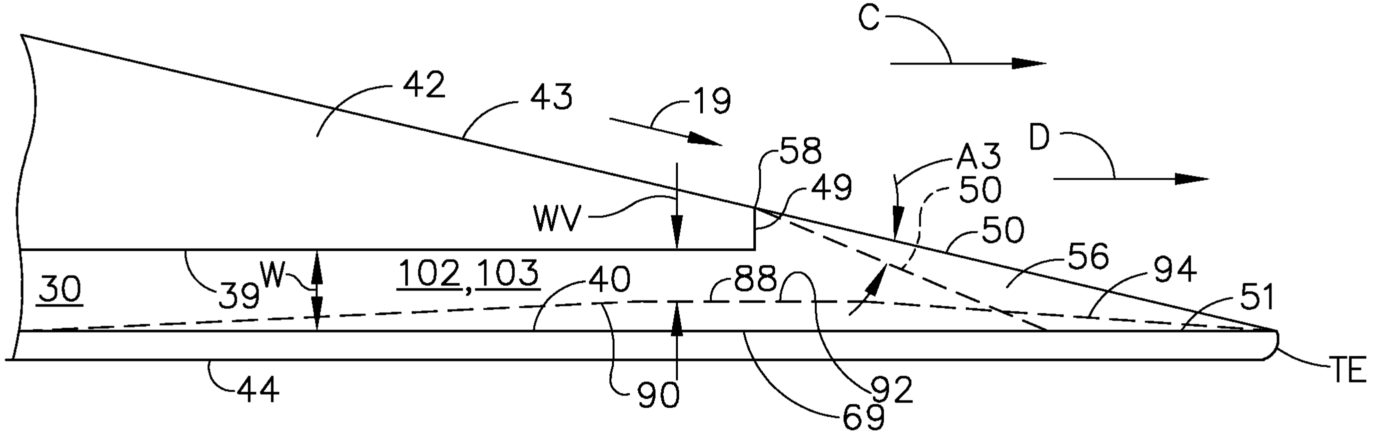
C
D
42
43
19
58
49
A3
50
50
56
94
51
WV
30
39
W
102,103
40
88
44
90
92
69
TE

FIG. 4

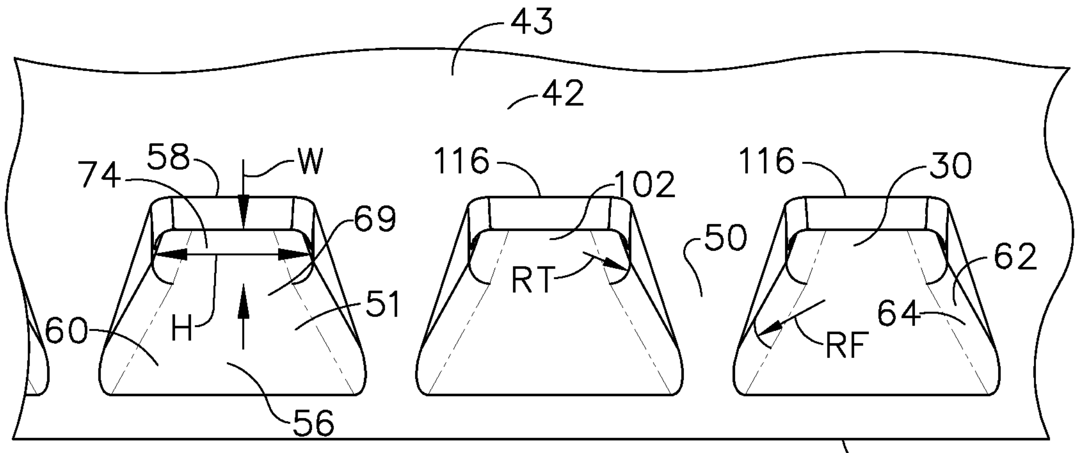
43
42
74
58
W
116
102
116
30
69
50
62
RT
H
51
64
60
RF
56
TE

FIG. 5

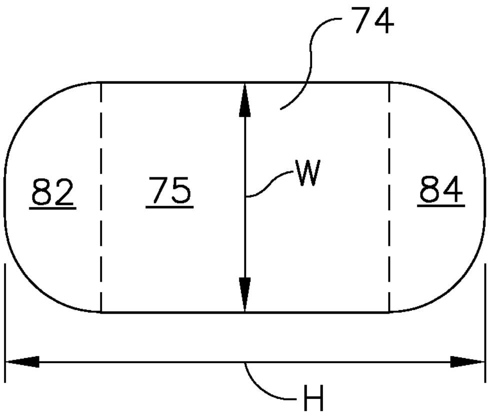

FIG. 6

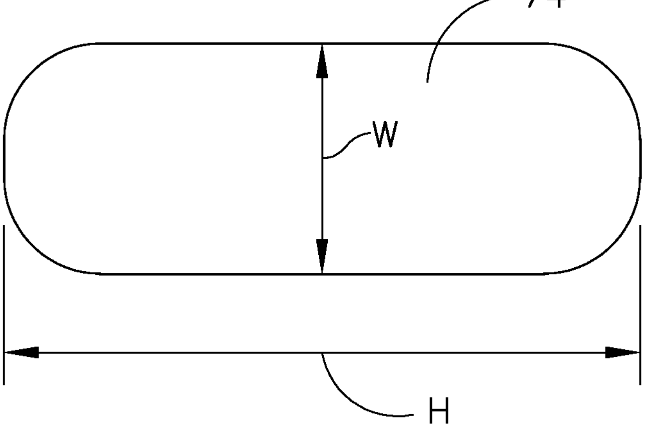

FIG. 7

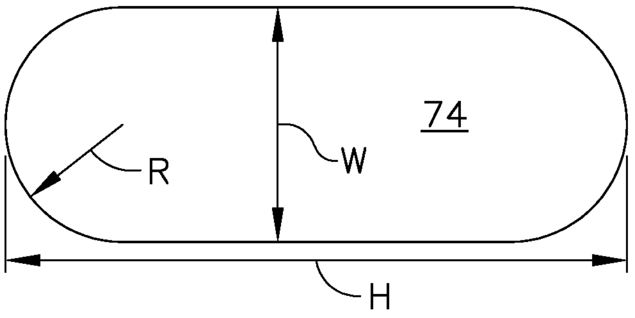

FIG. 8

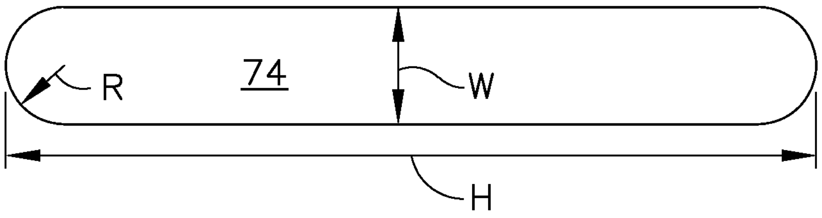

FIG. 9

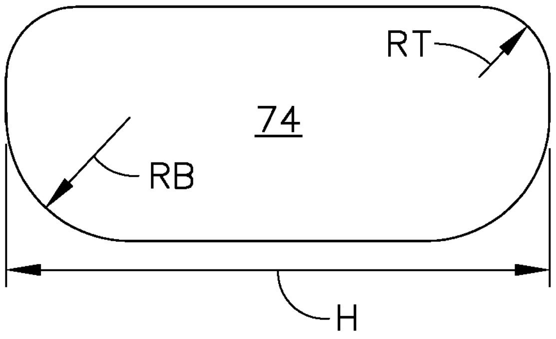

FIG. 10

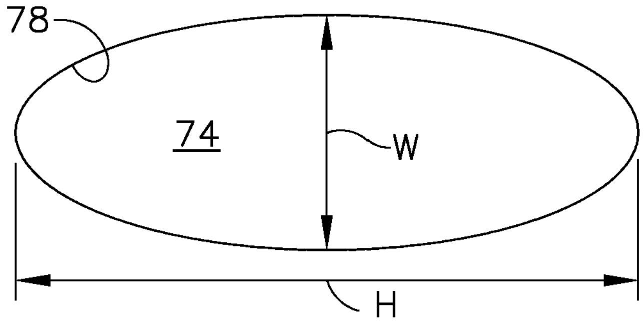

FIG. 11

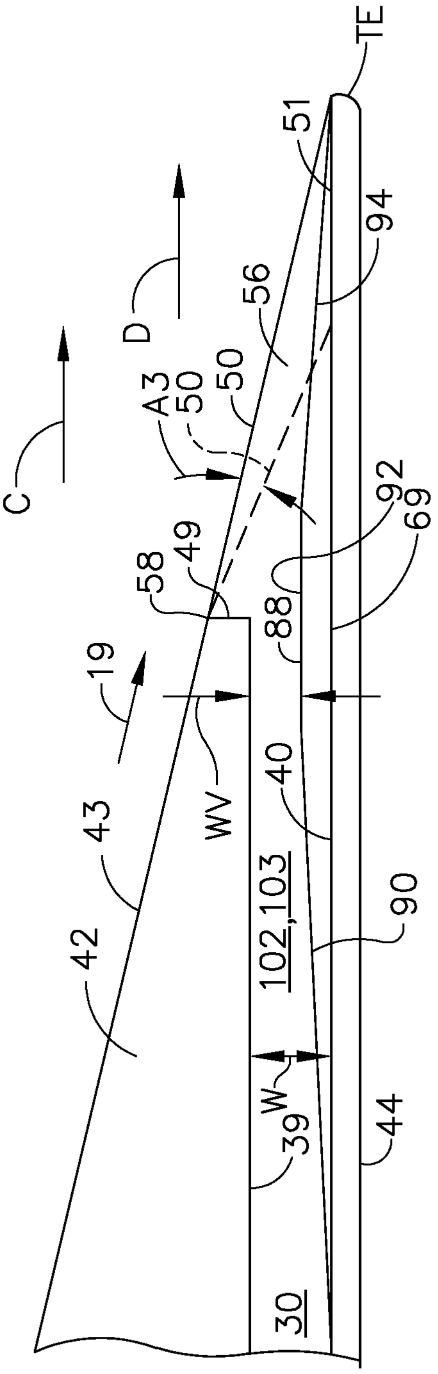
TE
51
94
56
D
C
A3
50
50
92
69
49
58
88
19
WV
40
43
102,103
90
42
W
39
44
30

FIG. 12

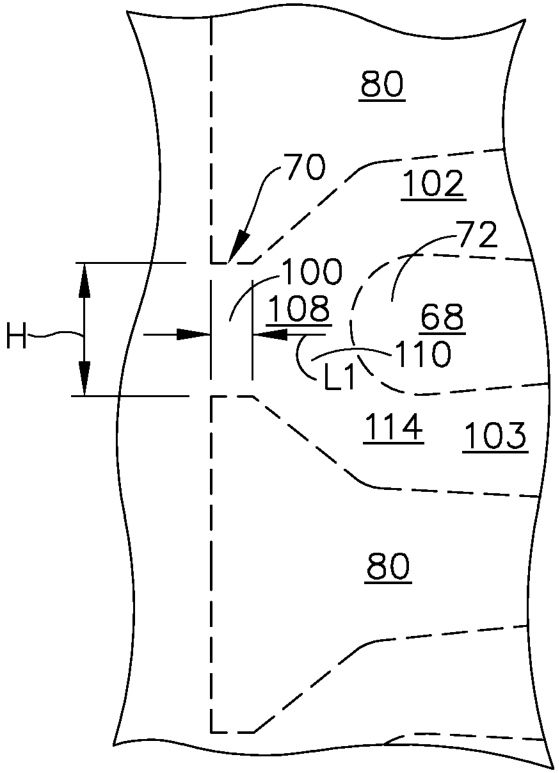

FIG. 13

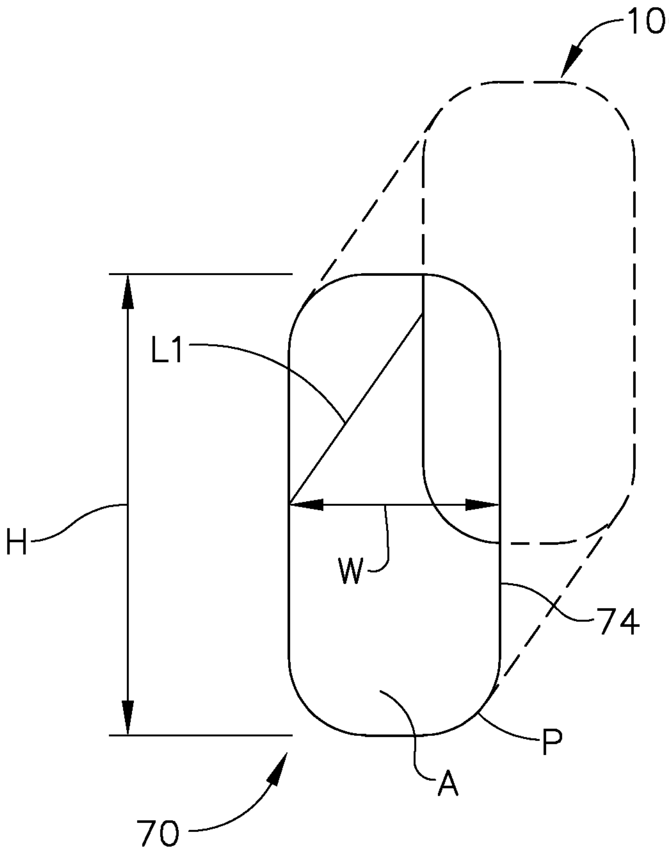

FIG. 14