No. 698,595. Patented Apr. 29, 1902.

C. H. VEEDER.

MOLD MECHANISM.

(Application filed May 22, 1900.)

(No Model.)

Fig. 1.

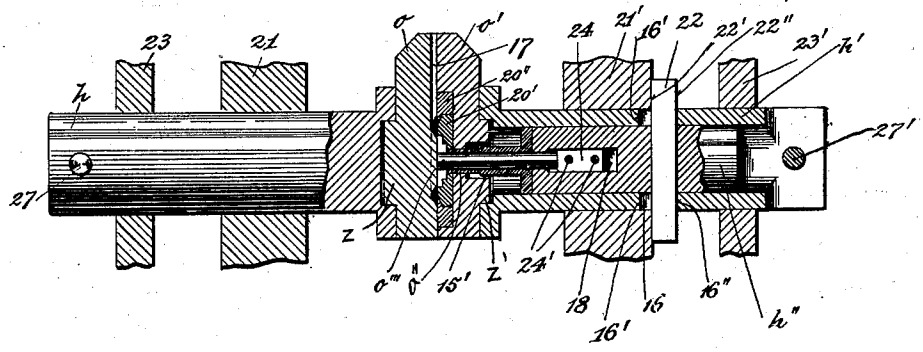

Fig. 2.

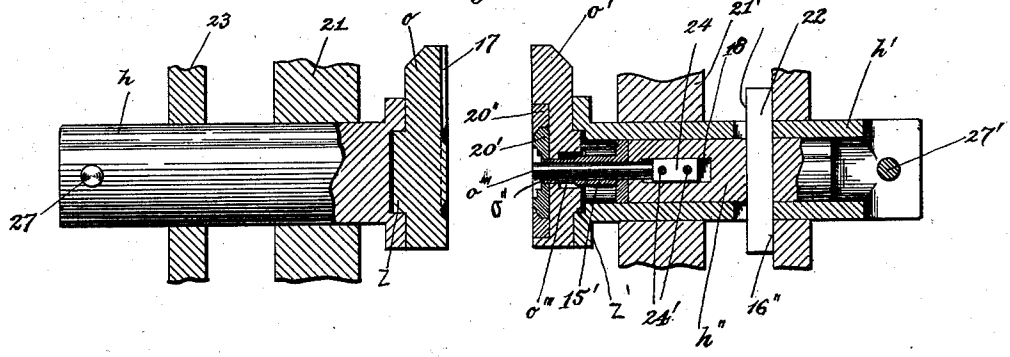

Fig. 3.

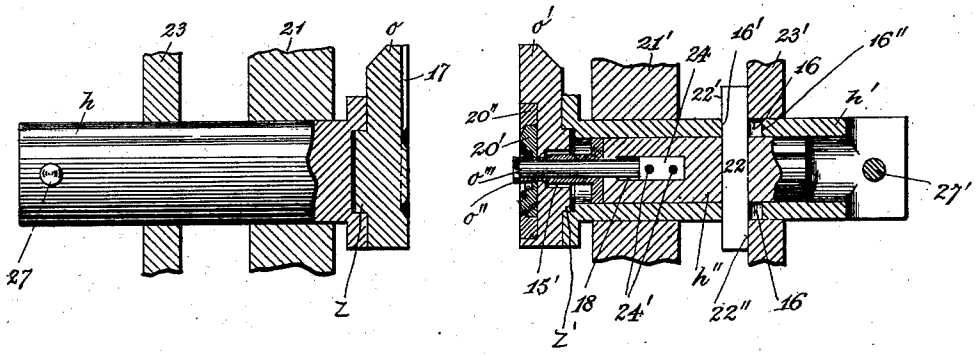

Witnesses:
Chas. R. Schmidt
C. E. Campbell

Inventor:
C. H. Veeder,
By his Attorney
F. A. Richards.

THE NORRIS PETERS CO., PHOTO-LITHO., WASHINGTON, D. C.

UNITED STATES PATENT OFFICE.

CURTIS H. VEEDER, OF HARTFORD, CONNECTICUT.

MOLD MECHANISM.

SPECIFICATION forming part of Letters Patent No. 698,595, dated April 29, 1902.

Application filed May 22, 1900. Serial No. 17,534. (No model.)

To all whom it may concern:

Be it known that I, CURTIS H. VEEDER, a citizen of the United States, residing in Hartford, in the county of Hartford and State of Connecticut, have invented certain new and useful Improvements in Mold Mechanism, of which the following is a specification.

This invention relates to mold mechanism; and it has for its main object the provision of an improved separable mold in which articles may be shaped into form and especially a mold in which castings may be formed from molten metal delivered into the mold under high pressure.

The present invention is in the nature of an improvement upon that shown, described, and claimed in my prior application, Serial No. 17,332, filed May 31, 1900, in which I have illustrated mold mechanism embodying a pair of complementary main sections and two auxiliary sections coöperative with one of the main sections, one or more of these last three coöperative mold-sections being movable relatively to another or others for the purpose of stripping the molded article or casting from the several mold-sections or dies. In said prior application I have also shown a mold in which the two complementary main sections are sprue-forming mold-sections, said sprue-hole being formed by complementary sprue-channels, one in the face of each such mold-section, and these sprue-forming mold-sections coöperate with other sections of the mold, two auxiliary sections coacting with one of such main mold-sections.

The mold mechanism illustrated in the present case differs from that illustrated in my said prior application in that all of the movements of the several mold-sections are controlled by stops, and the relative movement of one of the mold-sections with respect to another coöperating therewith is not governed in this case by a spring, as it is in the construction shown in said prior application. Moreover, the present mold mechanism is also distinguished from that shown in said prior application by the fact that one of the complementary main sections of the mold contains only the mold-space for forming the body of the casting, while the other of said complementary mold-sections contains only the sprue-hole or sprue-channel for forming the sprue of the casting, and the two complementary parts coöperate in such a manner that the sprue-hole contained solely in one of the main complementary sections is adapted to communicate with the mold-space contained solely in the other main section of the mold.

In the drawings accompanying this specification and forming part of the present application, Figure 1 is a sectional side elevation of mold-mechanism embodying my present invention and illustrating the parts in their closed positions. Fig. 2 is a similar view with the mold partly open, and Fig. 3 is a similar view showing the mold fully opened.

Similar characters designate like parts in the different figures of the drawings.

Many different styles of molds may be employed in my improved mold mechanism for forming castings of various shapes, provided that the molds differ only in the shapes of the mold-spaces; but in the present case I have illustrated a mold embodying two main sections adapted to be separated to the proper extent, only one of these sections having in this case an auxiliary mold-section or die movable relatively thereto. One of the main sections is designated in a general way by *o* and the other by *o'*. The mold-section *o* is in this case a sprue-forming section and contains no portion of the mold-space. The sprue-forming channel is designated herein by 17, and said channel constitutes in this case the entire sprue-hole. In this instance it is a straight channel communicating with an annular channel of such size as to entirely surround and communicate with a circular mold-space in the other or casting-forming section *o'* of the mold when these two mold-sections are brought together. The main section *o'* is preferably so formed that the casting-forming mold-section proper may be removed therefrom, and I have shown herein in the face of said mold-section *o'* a countersink in which is inserted a removable casting-forming section or die 20', which may be held in place by an annular retaining member or clamping-ring 20''. This mold-section 20' has in this case a central bore in or through which one or more auxiliary mold-sections may be located or may

work. It will be apparent that many different mold-sections or dies having an exterior similar to that of the die 20′ may be substituted, provided that these interchangeable sections or dies differ from one another only in the shapes of the mold-spaces. Of course as the die 20′ has a central bore the main section *o′* should be formed in a similar manner, and the bore therein registers with that in the die 20′ and is designated herein by 15′. In this case two other mold-sections or auxiliary sections coöperate directly with the main section *o′* and with the section 20′, one of which auxiliary sections is in the form of a tubular die or sleeve *o″*, while the other is a core *o‴* movable in said sleeve *o″*.

The mold-sections are intended to be supported by suitable mold-carriers, and in this case two principal mold-carriers are shown, they being preferably cylindrical members, such as *h* and *h′*, and carrying, respectively, mold-sections *o* and *o′*. These mold-sections are connected directly to and always move in unison with said mold-carriers, the mold-section *o* in this case having a projection *z*, which fits into a countersink in the inner end of the carrier *h*, while the mold-section *o′* has a corresponding projection *z′*, fitting into a similar countersink in the inner end of the mold-carrier *h′*, which latter is preferably tubular. The auxiliary mold-section *o″* may be secured directly to the inner end of the mold-carrier *h″*, and hence will always move in unison therewith, this mold-section, with its carrier, being preferably so mounted within the carrier *h′* that one of these last two carriers will be capable of moving relatively to the other to strip the casting from the main portion of the mold. In the construction shown the other auxiliary mold-section, which is in this case the core *o‴*, is secured to a core-carrier 24, which is connected directly to the main mold-carrier *h′* by means of pins, such as 24′. Said carrier 24 is in the nature of a key and is intended to work in a transverse key-slot 18 in the mold-carriage *h″*, the key-slot 18 being of course long enough to permit the proper movement of one of the parts relative to the other. It will be seen, therefore, that the core and the main mold-section *o′*, while forming two distinct parts of the mold, have a fixed relation to each other, and hence are movable in unison, while the auxiliary mold-section *o″* is a separate part and is movable relatively to the other two. In this case the main mold-section and the core, with their carrier, are, however, actually moved relatively to the auxiliary mold-section and its carrier *h″*, and this relative movement is intended to be limited in this case by suitable stops. In the construction shown the carriers *h′* and *h″* are connected by a transverse key working in a transverse key-slot, the auxiliary carrier *h″* in this case having the key fixed thereinto, while the main carrier *h′* has a key-slot 16 of such a length as to permit the proper relative movement of the main mold-carrier with respect to the auxiliary carrier *h″*.

In the present case the relative movement of one of the mold-sections with respect to another mold-section is intended to be effected not by a spring, as in my prior application hereinbefore referred to, but solely by means of actuating members and means, such as stops, for limiting the movements thereof, and in this case the end walls 16′ and 16″ of the key-slot 16 are intended to limit the relative movement of the carrier *h′* with respect to the carrier *h″* by coming in contact with one or the other of the stop-faces 22′ and 22″ of the key 22. In a substantially similar manner the movement of the main carrier *h′* as a whole is intended to be limited by the faces 22′ and 22″ of said key 22 coming in contact with stops, such as 21′ and 23′, respectively, which may be walls of supports in which the carrier *h′* is mounted for reciprocation. Similar members, such as 21 and 23, may be employed for supporting the carrier *h* for reciprocation and, if desired, may be used to limit the movements of carriers similar to those shown at *h′* and *h″*.

It should be understood that the various carriers and dies will be operated in the present case by connections to the main mold-carriers *h* and *h′*; but any means suitable for the purpose may be employed. Here said mold-carriers have pins, such as 27 and 27′, to which may be pivoted links or rods, (not shown,) which may be operated in any suitable manner. These carriers will normally when moved inward force the main mold-sections or dies *o* and *o′* into contact with each other, and the stop-face 22′ will be in contact with the wall 21′, while the end wall 16″ of the key-slot 16 will abut against the face 22′ of the key 22.

After a casting has been formed and the mold-sections are opened by moving the mold-carriers *h* and *h′* outward the main mold-carrier *h′* and the auxiliary mold-carrier *h″* will first move together to the position shown in Fig. 2 until the face 22′ of the key 22 comes in contact with the face 23′, when the auxiliary mold-carrier *h″* will be at the limit of its retreating movement, and the mold-carrier *h′*, with its main mold-sections and the core, will continue on to the position shown in Fig. 3 until the end wall 16′ of the key-slot 16 comes in contact with the face 22′ of the key 22, during which movement of course the auxiliary mold-section *o″* will be projected through the mold-section 20′ by the rearward movement of the latter and of the core and will strip the casting from the mold-section 20′ and from the core *o‴*. When the parts begin to move toward each other again, the mold-carrier *h′* and the auxiliary mold-carrier *h″* will first move together until the stop-face 22′ strikes the stop-face 21′, whereupon the auxiliary mold-carrier and its mold-section *o″* will be at the limit of their forward movement, and the main mold-carrier, with its

mold-section 20′ and the core o''', will continue on until the end wall 16″ of the key-slot 16 strikes the stop-face 22″ of the key 22, when the parts will be in their closed positions again.

It will be evident from the foregoing that all of the movements of the various operating parts are positively controlled by stop-faces and that no means other than suitable operating connections to the mold-carriers h and h' need be employed for effecting the principal movement of the two carriers h' and h'' and the relative movement of one of said carriers with respect to such main movement, and hence by means of the improved operating and stop devices herein shown the movements of the carriers may be controlled as to their movements and positions with great certainty and precision.

Having described my invention, I claim—

1. In a mold, the combination with a mold-section, of a pair of reciprocatory and relatively movable mold-sections; a fixed stop and a coacting face for limiting the movement in one direction of one section of said pair of mold-sections; a separate stop and coacting face for limiting the movement of this section in the opposite direction; means for positively reciprocating this section; and stops and coacting faces for limiting the relative movement of said pair of reciprocatory sections at the close of the movement in both directions of the positively-reciprocated section.

2. In a mold, the combination with a mold-section, of a pair of reciprocatory and relatively movable mold-sections; mold-carriers for supporting said pair of mold-sections; a fixed stop and a coacting face for limiting the movement in one direction of one of said carriers; a separate stop and coacting face for limiting the movement of this carrier in the opposite direction; means for positively reciprocating this carrier; and stops and coacting faces for limiting the relative movement of said carriers at the close of the movement in both directions of the positively-reciprocated carrier.

3. In a mold, the combination, with a mold-section, of a pair of mold-sections facing said first mold-section and complementary thereto and coacting directly with each other; a mold carrier for movably supporting said first mold-section; a pair of coöperative mold-carriers movable together and also relatively to each other and supporting said pair of mold-sections respectively; means for limiting the movements of one of said pair of mold-carriers; and means for limiting the relative movement of the other mold-carrier of said pair.

4. In a mold, the combination, with a mold-section, of a pair of mold-sections facing said first mold-section, and complementary thereto and coacting directly with each other; a mold-carrier for movably supporting said first mold-section; a pair of coöperative mold-carriers one mounted on the other and movable together and also relatively to each other and supporting said pair of mold-sections respectively; means for limiting the movements of one of said pair of mold-carriers; and means for limiting the relative movement of the other mold-carrier of said pair.

5. In a mold, the combination, with a mold-section, of a pair of mold-sections facing said first mold-section and complementary thereto and coacting directly with each other; a mold-carrier for movably supporting said first mold-section; mold-carriers movable relatively to each other and supporting said pair of mold-sections respectively, one of which mold-carriers is tubular and is mounted on the other; means for limiting the movements of one of said pair of mold-carriers; and means for limiting the relative movement of the other mold-carrier of said pair.

6. In a mold, the combination, with a mold-section, of a pair of mold-sections facing said first mold-section and complementary thereto and coacting directly with each other; a mold-carrier for movably supporting said first mold-section; mold-carriers movable relatively to each other and supporting said pair of mold-sections respectively, one of which mold-carriers is tubular and is mounted on the other, and one of which is operative for actuating the other, said operating mold-carrier having a transverse slot; a transverse key carried by the operated mold-carrier and working in said slot in the operating mold-carrier; and means for limiting the movements of said operating mold-carrier.

7. The combination, with a main mold-section and with a core, of an auxiliary mold-section assembled therewith; a tubular main mold-carrier supporting said main mold-section and the core and having a transverse slot; an auxiliary mold-carrier supporting said auxiliary mold-section and mounted to slide in the main mold-carrier and having a transverse key working in said slot in the main mold-carrier; and means for limiting the movements of said auxiliary mold-carrier.

8. A separable mold comprising a pair of complementary main mold-sections one provided with a sprue-forming mold-space and the other with a casting-forming mold-space; an auxiliary mold-section coöperative with one of said main mold-sections; a mold-carrier for movably supporting one of said main mold-sections; and a pair of coöperative mold-carriers movable together and also relatively to each other and supporting the other main mold-section and the auxiliary mold-section.

9. A separable mold comprising a pair of complementary mold-sections, one provided with a sprue-forming mold-space and the other with a casting-forming mold-space; a core-section fixed with relation to one of said mold-sections; an auxiliary mold-section movable with relation to the core-section and the mold-section relatively to which the core-section is fixed; mold-section carriers for mov-

ably supporting the various mold-sections, the carrier supporting the core-section also supporting the main section relatively to which the core-section is fixed; means for positively reciprocating one of the carriers; and means for limiting the relative movement of said auxiliary-section carrier and said core and main section carrier at the close of the movement in both directions of the positively-reciprocated carrier.

10. A separable mold comprising a pair of complementary main mold-sections, one provided with a sprue-forming mold-space and the other with a casting-forming mold-space; a pair of auxiliary mold-sections coöperative with one of said main mold-sections; a mold-carrier for movably supporting one of said main mold-sections; and a pair of coöperative mold-carriers adapted to move together and also with relation to each other, one of this pair of coöperative mold-carriers supporting the remaining main mold-section and also one of the auxiliary mold-sections, and the other of said pair of coöperative mold-carriers supporting the other auxiliary mold-section.

11. A separable mold comprising a pair of complementary main mold-sections, one provided with a sprue-forming mold-space, and the other with a casting-forming mold-space; an auxiliary mold-section and a core-section coöperative with one of said main mold-sections; a mold-carrier for movably supporting one of said main mold-sections; a mold-carrier for movably supporting the other main mold-section and also the core-section; and a carrier supporting the other auxiliary mold-section and movable relatively to said last-mentioned main mold-section and cause said auxiliary mold-section to project beyond the faces of the coöperative main and core sections when the mold is open.

CURTIS H. VEEDER.

Witnesses:
ELBRIDGE P. ANDERSON,
HENRY BISSELL.