No. 828,462. PATENTED AUG. 14, 1906.

C. R. CONNER.

TIPPLE.

APPLICATION FILED OCT. 13, 1905.

4 SHEETS—SHEET 1.

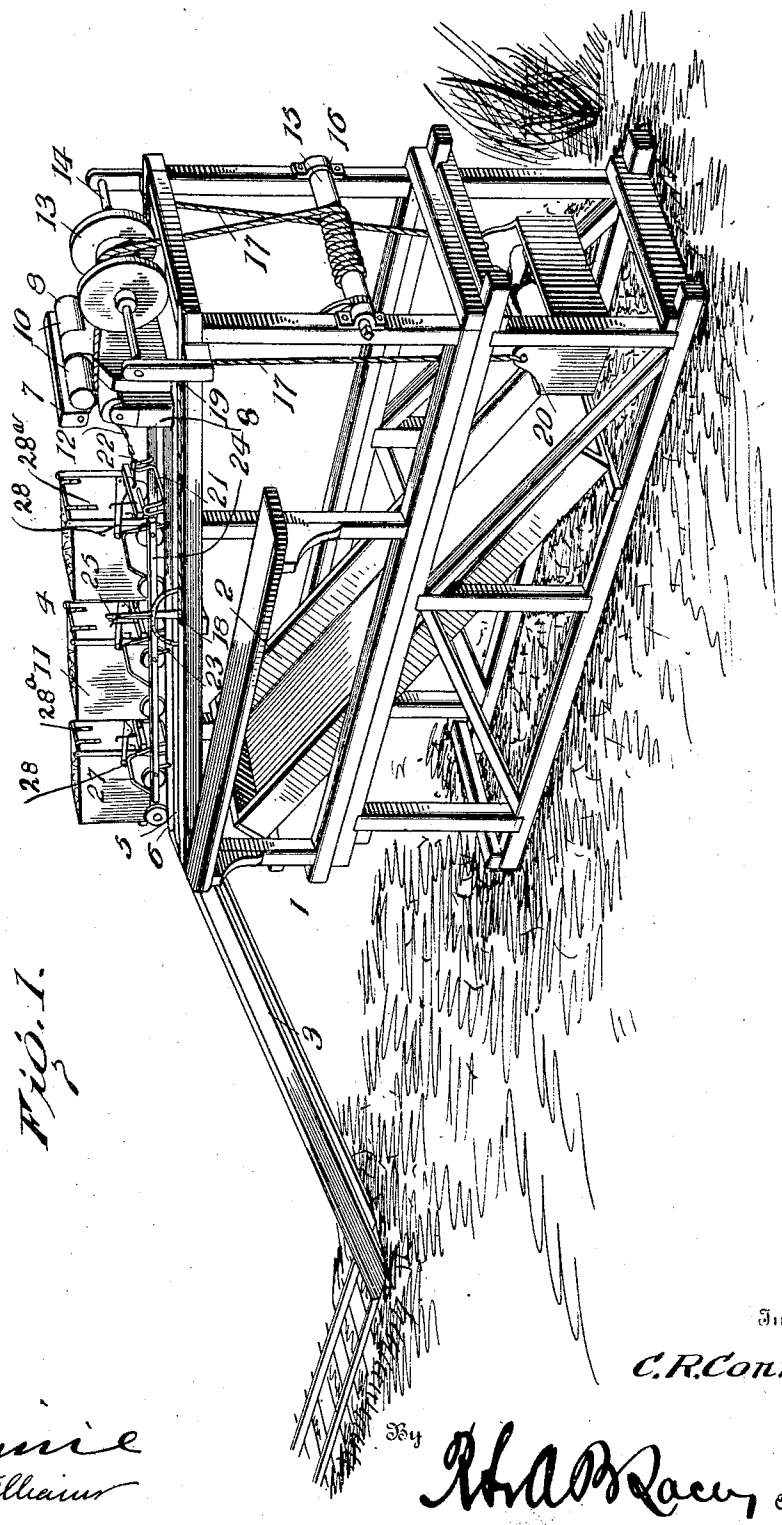

Fig. 1.

Witnesses

[signature]

[signature]

Inventor

C. R. Conner

By [signature] Attorneys

THE NORRIS PETERS CO., WASHINGTON, D. C.

No. 828,462. PATENTED AUG. 14, 1906.

C. R. CONNER.

TIPPLE.

APPLICATION FILED OCT. 13, 1905.

4 SHEETS—SHEET 2.

Fig. 2.

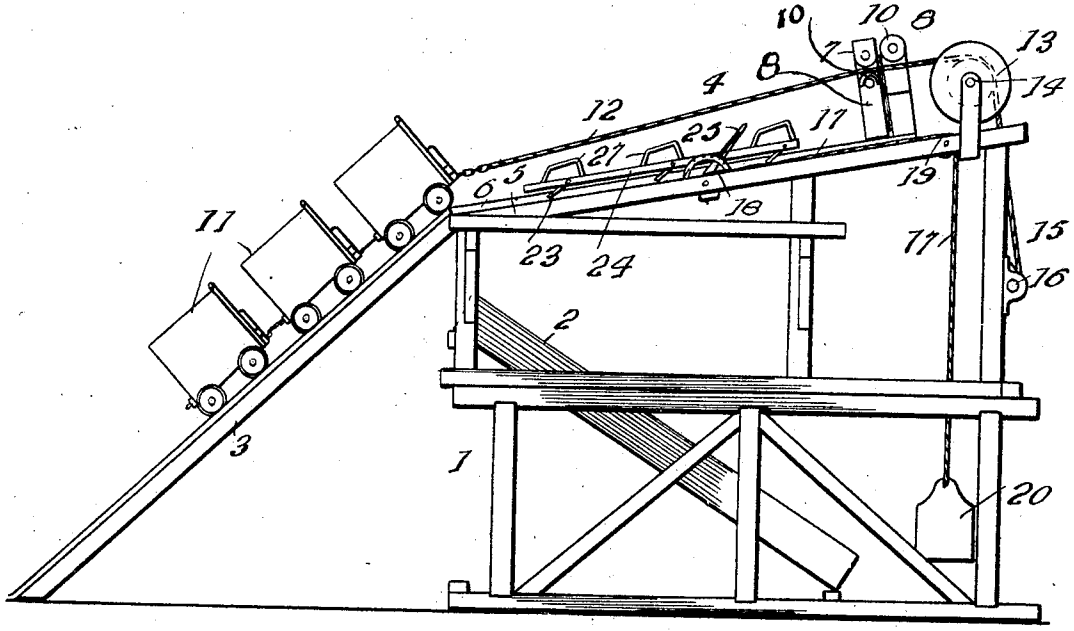

Fig. 7.

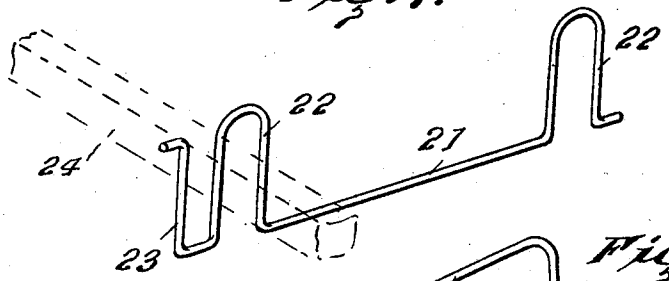

Fig. 8.

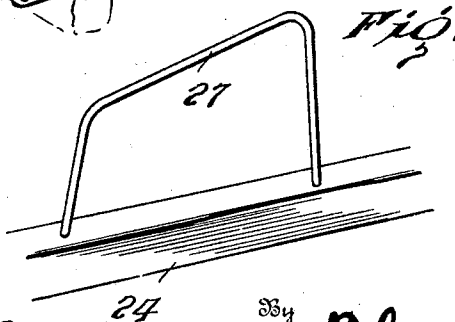

Witnesses

F. B. Williams

Inventor

C. R. Conner

By Rhodes Lacey Attorneys

THE NORRIS PETERS CO., WASHINGTON, D. C.

No. 828,462. PATENTED AUG. 14, 1906.

C. R. CONNER.

TIPPLE.

APPLICATION FILED OCT. 13, 1905.

4 SHEETS—SHEET 3.

Fig. 3.

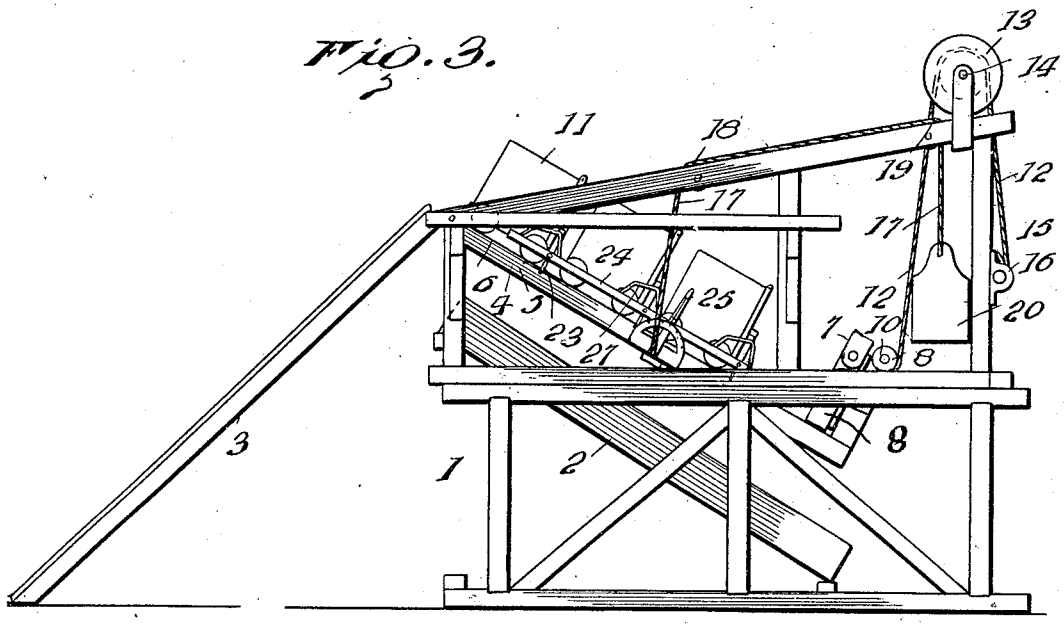

Fig. 4.

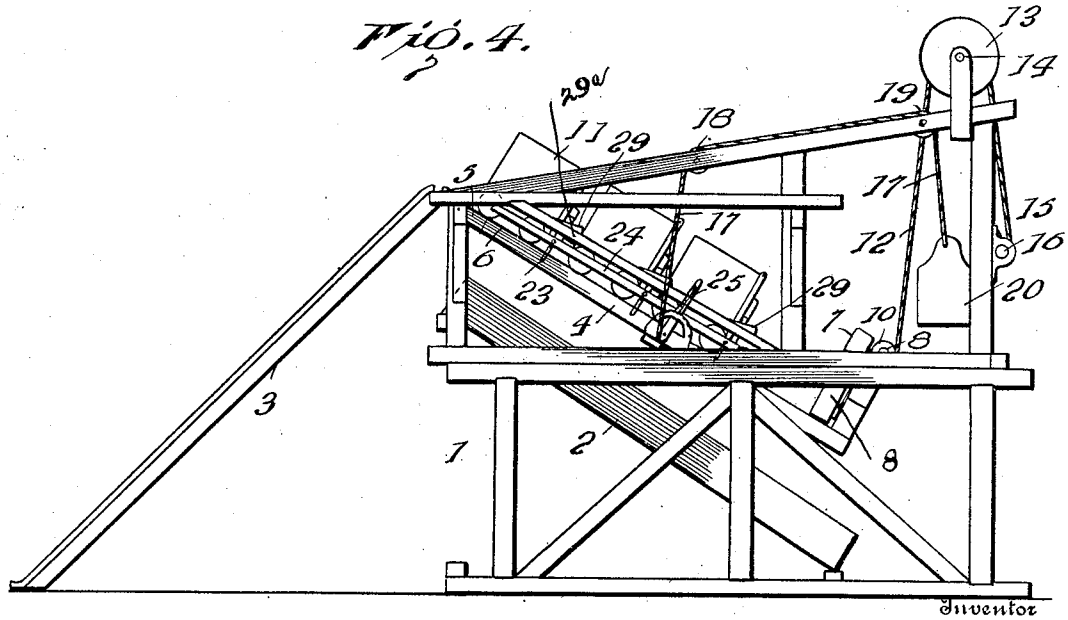

Inventor

Witnesses

A. B. Williams

C. R. Conner

By R. H. B. Lacey, Attorneys

THE NORRIS PETERS CO., WASHINGTON, D. C.

No. 828,462.

PATENTED AUG. 14, 1906.

C. R. CONNER.

TIPPLE.

APPLICATION FILED OCT. 13, 1905.

4 SHEETS—SHEET 4.

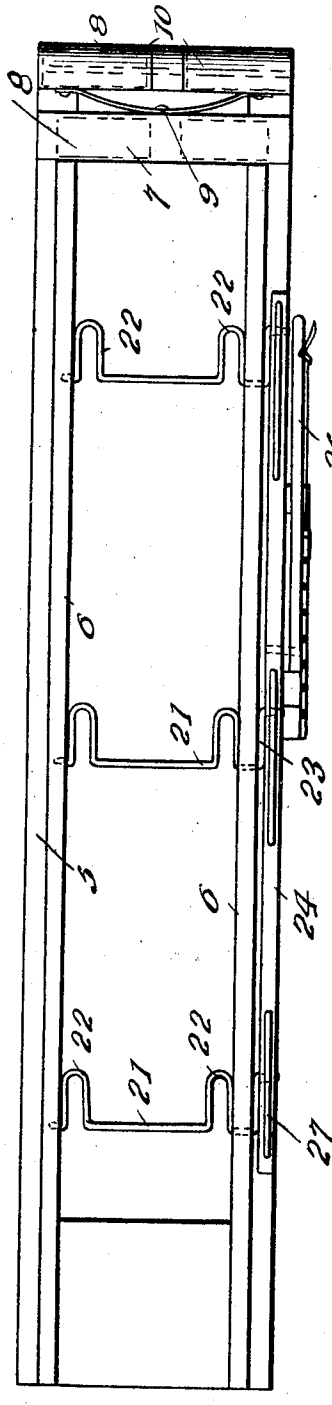

Fig. 5.

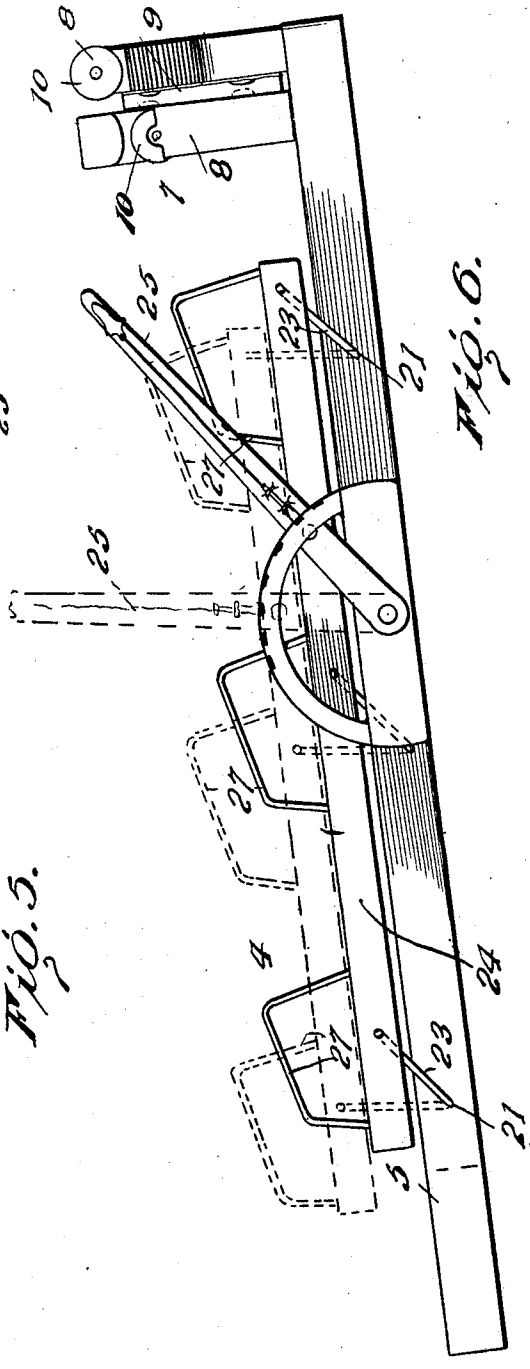

Fig. 6.

Witnesses

[signature]

[signature]

Inventor

C. R. Conner

By [signature], Attorneys

THE NORRIS PETERS CO., WASHINGTON, D. C.

UNITED STATES PATENT OFFICE.

CHARLIE R. CONNER, OF BESSEMER, ALABAMA.

TIPPLE.

No. 828,462. Specification of Letters Patent. Patented Aug. 14, 1906.

Application filed October 13, 1905. Serial No. 282,627.

To all whom it may concern:

Be it known that I, CHARLIE R. CONNER, a citizen of the United States, residing at Bessemer, in the county of Jefferson and State of Alabama, have invented certain new and useful Improvements in Tipples, of which the following is a specification.

This invention contemplates certain improvements in tipples which are used for dumping coal or ore from tram-cars into railroad-cars or other vehicles; and the object of the invention is to provide an apparatus of this character embodying improved means whereby an entire train of cars may be simultaneously dumped in an expeditious manner.

The invention resides in an improved construction and arrangement of tipple provided with means for securely holding each car of a train of cars on the tilted tipple-carriage and in means for unlatching the discharge-door of the several cars simultaneously, the arrangement being such that the tilting tipple-carriage may be readily returned to its normal position after the contents of the several cars have been discharged onto a chute or similar device leading to the railroad-cars, vessel, or other vehicle designed to receive the contents.

For a full description of the invention and the merits thereof and also to acquire a knowledge of the details of construction of the means for effecting the result reference is to be had to the following description and accompanying drawings, in which—

Figure 1 is a perspective view illustrating my invention with a train of trams in the uppermost position preparatory to unloading. Fig. 2 is a side elevation of the invention. Fig. 3 is a side elevation showing the parts in position to discharge the contents of the cars or trams. Fig. 4 is a side elevation illustrating a modification. Figs. 5 and 6 are a top plan and side elevation, respectively, on a larger scale. Figs. 7 and 8 are detail perspective views illustrating, respectively, the lock-bars for the cars and the unlatching devices.

Corresponding and like parts are referred to in the following description and indicated in all the views of the drawings by the same reference characters.

Referring to the drawings, the reference-numeral 1 designates a suitable trestle-work within which is mounted a chute 2 to receive the ore or coal from the cars, and at one end of the framework is mounted an inclined track 3, leading upwardly thereto. At the same end of the trestle that the inclined track 3 is located a tilting tipple-carriage 4 is mounted, said carriage mainly consisting of two stringers 5, pivoted at one end to a cross-beam of the trestle in position to form a continuation of the track 3, said stringer being suitably braced in a transverse direction, and track-rails 6 mounted on said stringers. At the free end of the tilting carriage 4 is mounted a buffer 7, which preferably comprises two transversely-extending head-blocks 8, one in front of the other, and a spring 9 interposed between said head-blocks to render the bumper sufficiently resilient to compensate without injury for any shock that might be caused by the tram-cars being drawn up against it with unnecessary impact. As shown best in Figs. 5 and 6, the spring 9 is secured to one of the head-blocks between its ends and to the other at its ends, and the foremost head-block is mounted to move toward and from the other, so that it is permitted to yield by the spring 9 and absorb the shock of the cars when the latter are drawn up against it. Each of the head-blocks 8 is provided with two rollers 10, the rollers of one head-block being located in a different horizontal plane from the corresponding rollers of the other head-block.

The trams or other coal-carrying cars 11 are, as shown in the present instance, three in number, and the foremost of these trams is secured to a rope or cable 12, passing between two of the rollers 10, around a pulley or drum 13, mounted on the shaft 14 at one end of the trestle-work, the end of said rope or cable being arranged to be wound around the drum 15 of a winch or other hoisting device 16. This hoisting device, as is manifest, may be operated in any suitable manner. Each of the stringers of the tipple has secured to it, preferably about midway of its length, a rope or cable 17, said ropes passing over sheaves 18 in the upper longitudinal beams of the trestle-work and thence over similar sheaves 19 and are attached to a suitable counterweight 20 for the purpose of furnishing weight to assist in raising the tipple and moving the cars back to the proper position when dumped.

21 designates lock-bars, the number of the same depending upon the number of cars it is desired the tipple shall accommodate, and these lock-bars are pivoted transversely to the tipple, as shown, and are provided pref-

erably at each end with a U-shaped arm 22. These bars 21 with their arms 22 are positioned at suitable spaces apart, according to the length of the trams or cars employed. Each of the lock-bars 21 is provided with a crank 23, and the cranks 23 are all connected to a longitudinally-extending bar 24, so that they may all be simultaneously operated. The bar 24 is actuated, preferably, by a lever 25, secured thereto. The unlatching devices 27, one for each car, may also be secured to the bar or lever-rail 24, and these unlatching devices are preferably constituted by bowed rods extending upwardly from the upper face of the lever-rail 24 in a longitudinal direction, as shown.

When a train of trams is drawn up the inclined track 3 onto the tipple in its upper position, the operator may, by manipulation of the lever and lever-rail 24, simultaneously actuate all of the locking-bars 21 in a direction to cause their arms 22 to move into an upright position in front of each car, whereby to hold the same on the tipple during the subsequent operation of tilting or lowering the latter, also the actuation of the lever-rail 24 will cause the unlatching devices 27 to raise the latches 28 of the doors 28^a of the cars, so that when the tipple is allowed to lower into the position shown in Fig. 3 the said doors will be permitted to open and discharge the contents of the trams.

If desired, the latch-raising device may be mounted independently of the lock-bars on a beam or other part of the trestle-work in such a position as to raise the latch of each car when the cars have reached a point near the lower limit of their movement, so as to avoid the coal or ore from scattering or falling too far. Such arrangement is indicated at 29 in Fig. 4, in which figure the unlatching devices 29 are mounted for actuation independently of the lock-bars 21, so that the entire train of cars may be first lowered with the tipple and then subsequently unlatched to discharge their load. As shown in said figure, the trestle-work is provided with a diagonal bar 29^a, which is stationary with respect to the trestle-work, and is provided with the unlatching devices 29, which are also stationary. As the carriage is lowered with the lock-bars raised and holding each of the cars in position and preventing them from rolling off the carriage the stationary unlatching devices 29 on the diagonal bar 29^a will come into contact with the latches on the doors of the cars and throw said latches upwardly to unlock the doors.

From the foregoing description, in connection with the accompanying drawings, the operation of my improved tipple is manifest. It will be seen that I have provided an improved construction of tipple having improved means by which each of the cars is held on the tipple in tilted position independent of the other, so that the entire weight or strain will not be placed at the front of the train, and it will also be noted that the entire device may be readily and efficiently operated to effect the tilting of the tipple and the unlatching or unlocking of the car-doors, and the tipple may be returned to its normal position in an expeditious manner after the cars have discharged their load.

Having thus described the invention, what is claimed as new is—

1. An apparatus of the character described comprising a trestle-work, a track leading thereto, a tilting tipple mounted in said framework, and a plurality of locking devices designed to support each car of a train on the tipple when the latter is lowered.

2. In an apparatus of the character described, a tilting tipple or carriage, lock-bars mounted transversely therein, and spaced apart in a longitudinal direction corresponding to the length of the cars to be accommodated, and means for simultaneously actuating said lock-bars to hold each car of a train independently of the others.

3. In an apparatus of the character described, a tilting tipple-carriage, lock-bars mounted transversely therein and provided with arms as set forth, a lever-rail connecting said lock-bars for simultaneous actuation, and a lever for operating said lever-rail whereby to simultaneously project the arms of all the lock-bars upwardly in front of the respective cars.

4. In an apparatus of the character described a tilting tipple, a plurality of transverse lock-bars mounted to turn therein about their longitudinal axes and spaced apart a distance corresponding approximately to the length of the cars to be accommodated, each of said lock-bars being provided at its ends with U-shaped integral arms, and means for simultaneously turning said bars whereby to project the arms in front of the respective cars.

5. In an apparatus of the character described a tilting tipple or carriage, transversely-extending lock-bars mounted to turn therein about their longitudinal axes, each of said bars provided with arms designed to be projected in front of the respective cars, and unlatching devices for the latches of the respective cars, as and for the purpose set forth.

6. In an apparatus of the character described a tilting tipple or carriage, transversely-extending lock-bars mounted to turn therein about their longitudinal axes, each of said bars provided with arms designed to be projected in front of the respective cars, and unlatching devices designed to unlatch the doors of the respective cars, said unlatching devices being arranged for simultaneous operation.

7. In an apparatus of the character de-

scribed a tilting tipple or carriage, transversely-extending lock-bars mounted therein to turn about their longitudinal axes and provided with U-shaped fingers arranged to be projected in front of the respective cars, means for simultaneously actuating said lock-bars, said means including a lever-rail, a lever and a plurality of unlatching devices for the doors of the respective cars, said unlatching devices being mounted on said lever-rail for simultaneous operation.

8. In an apparatus of the character described, a tilting tipple or carriage, means for holding each car of a train on said tipple when lowered, said means being arranged to project in front of each of the cars, mechanism for simultaneously operating the car-holding means, and unlatching devices for the doors of the several cars, said devices being also arranged for operation simultaneously with each other and with the car-holding means.

9. In an apparatus of the character described, a tilting tipple or carriage, a plurality of locking-bars located therein and provided with integral U-shaped fingers designed to be projected in front of the respective cars to hold the same, one independently of the others, a lever-rail connected with said lock-bars and arranged to simultaneously actuate the same, a lever for operating said lever-rail, and a series of unlatching devices composed of longitudinally-extending bow-shaped rods extending upwardly from a support on the upper face of said lever-rail, one of said unlatching devices being provided for each car.

10. In an apparatus of the character described a tilting tipple or carriage provided at its free end with a buffer, said buffer comprising two blocks, and means for holding one of said blocks in front of the other in a yielding manner.

11. In an apparatus of the character described a tilting tipple or carriage provided at its free end with a buffer, said buffer comprising two head-blocks, one in front of the other, said head-blocks being provided with rollers, and a spring interposed between said head-blocks, as and for the purpose set forth.

12. In an apparatus of the character described a tipple or carriage provided at its free end with a buffer, said buffer comprising two head-blocks located one in front of the other, and each head-block provided with two rollers, the rollers of one head-block being located in a different horizontal relation from the rollers of the other head-block, and a spring between said head-blocks.

In testimony whereof I affix my signature in presence of two witnesses.

CHARLIE R. CONNER. [L. S.]

Witnesses:
J. A. ESTES,
J. R. RUTHERFORD