US 20240306741A1

(19) **United States**

(12) **Patent Application Publication** (10) **Pub. No.: US 2024/0306741 A1**

Blaise et al. (43) **Pub. Date: Sep. 19, 2024**

(54) **CONVERTIBLE ONE PIECE GARMENT**

(71) Applicants: **Sanchez Blaise**, Nicholasville, KY (US); **Jemmima Blaise**, Nicholasville, KY (US)

(72) Inventors: **Sanchez Blaise**, Nicholasville, KY (US); **Jemmima Blaise**, Nicholasville, KY (US)

(21) Appl. No.: **18/120,524**

(22) Filed: **Mar. 13, 2023**

Publication Classification

(51) **Int. Cl.**
A41D 15/02 (2006.01)
A41D 13/02 (2006.01)

(52) **U.S. Cl.**
CPC ***A41D 15/02*** (2013.01); ***A41D 13/02*** (2013.01); *A41D 2300/322* (2013.01)

(57) **ABSTRACT**

A one-peace garment has an upper section that covers a wearer's upper body, a lower section that covers the person below the waist and legs, and a continuous track on the inseam of the lower section of the garment. This track separates the front and rear portions of the lower section of the garment. As desired, this continuous track enables the wearer to use a connection element to create and close an internal opening between the front and rear garment portions. The adjustable track also allows altering the garment's design for a different appearance.

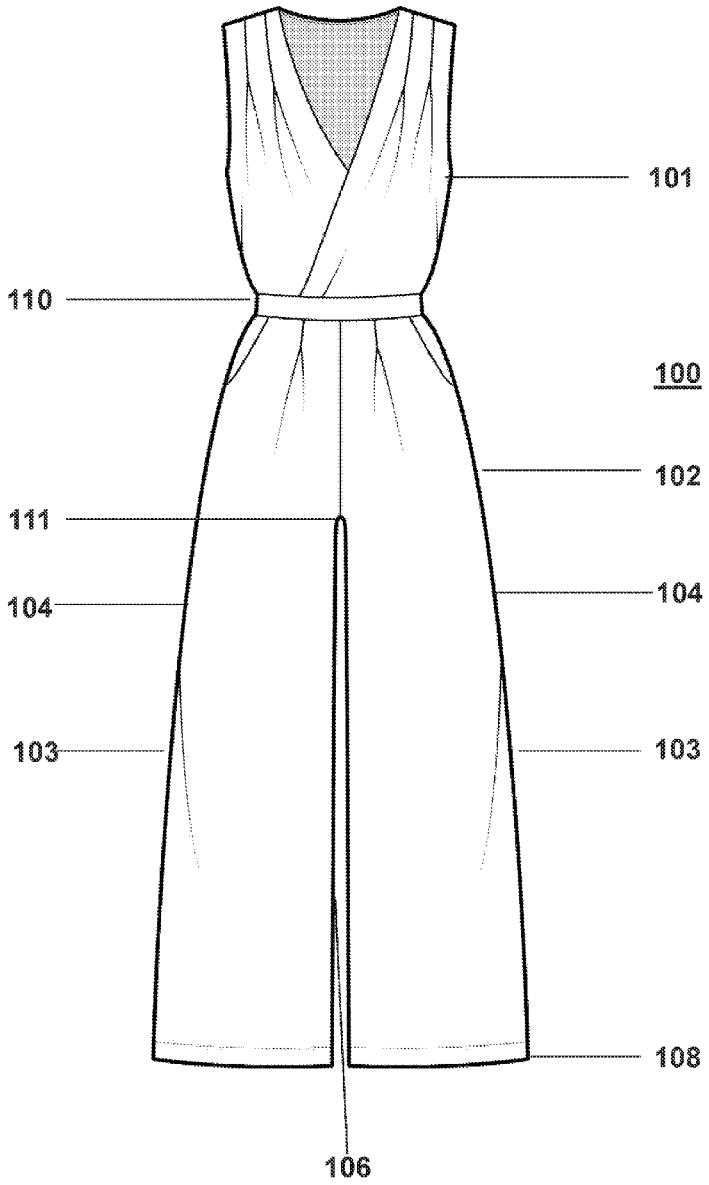

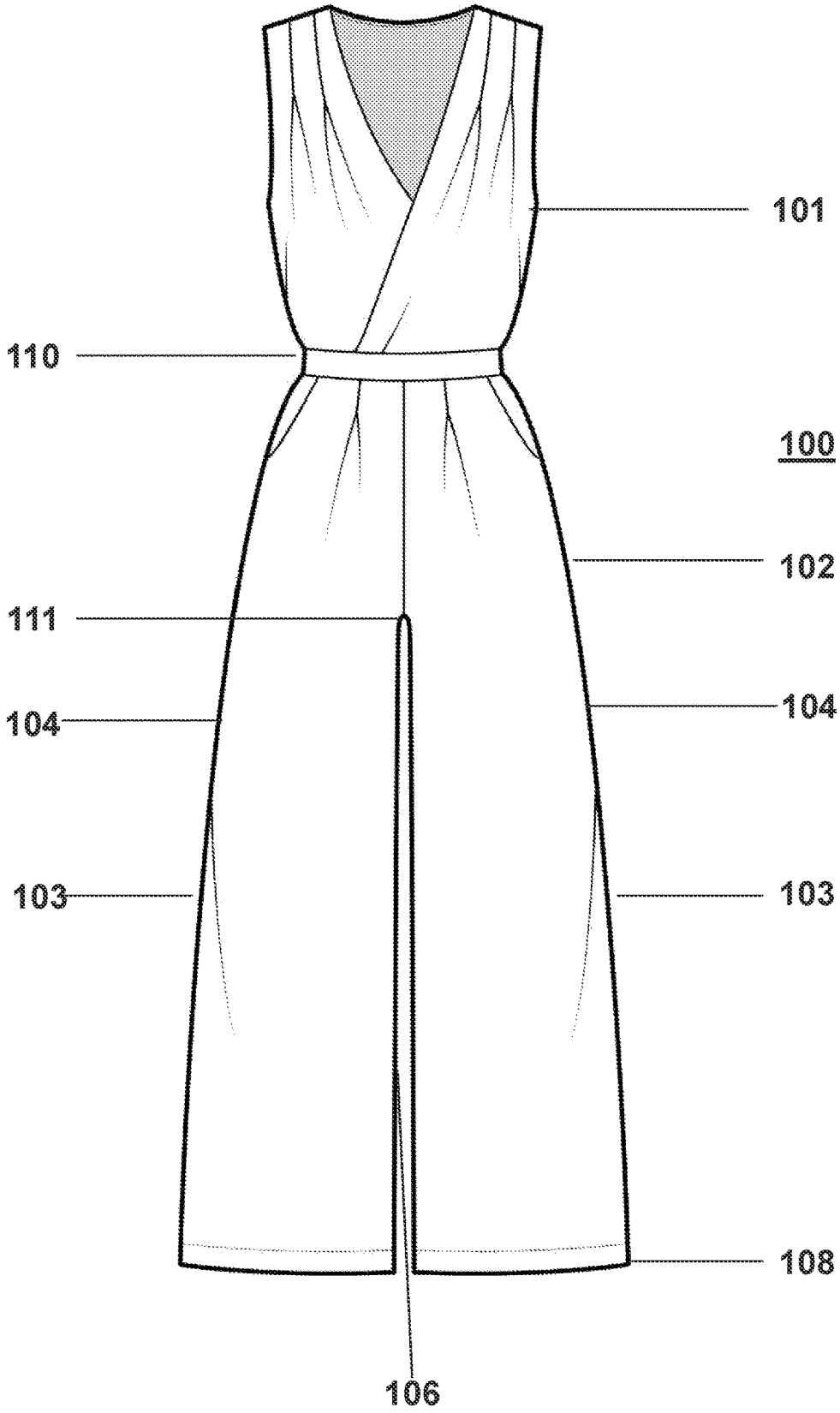

FIG. 1

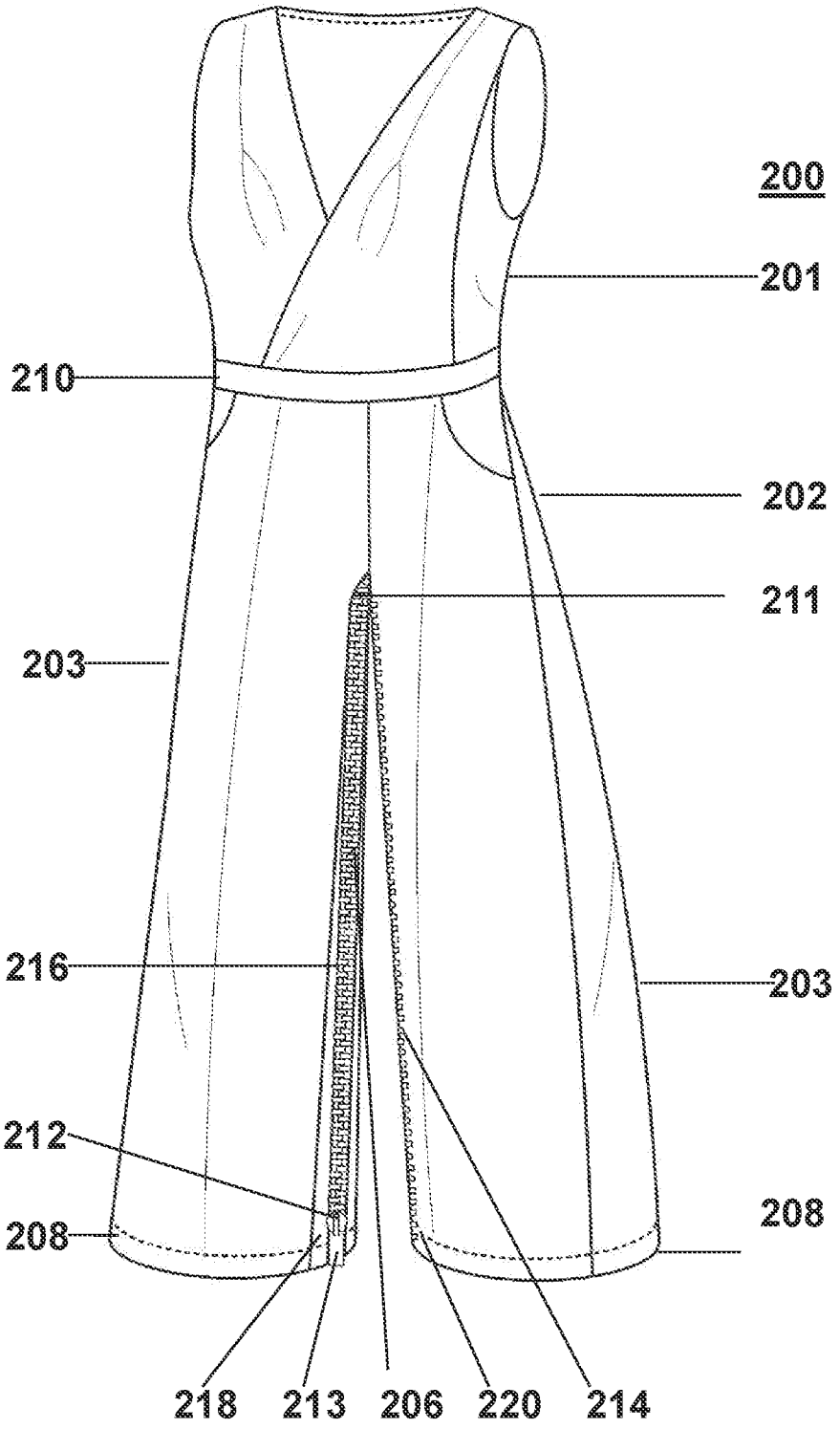

FIG. 2

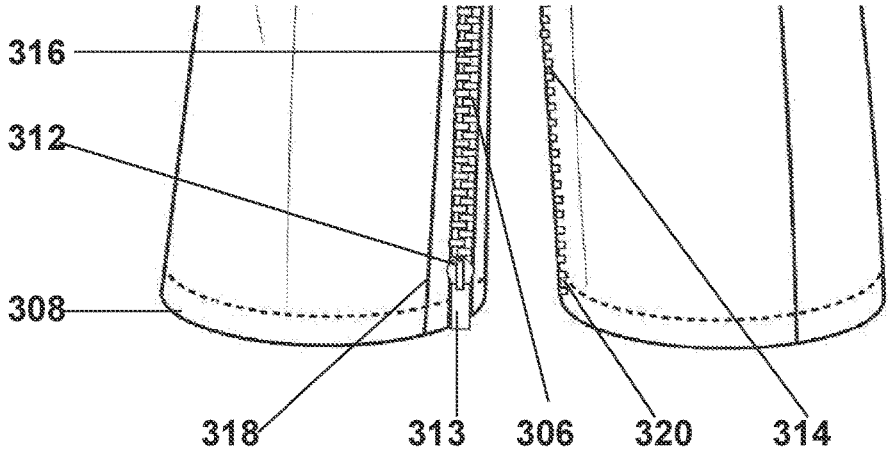

FIG. 3A

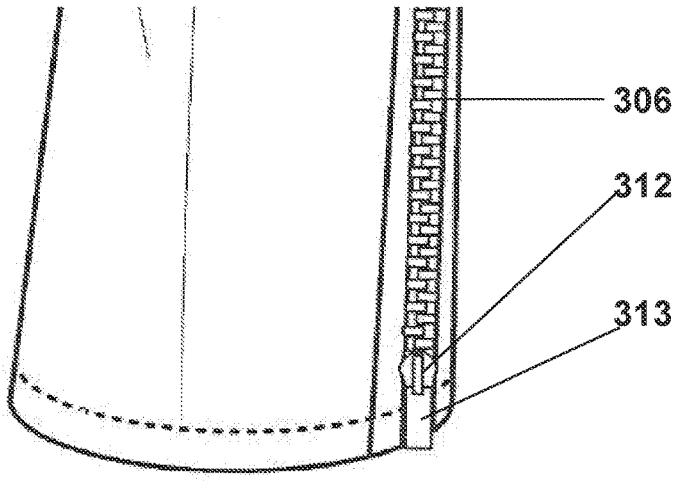

FIG. 3B

CONVERTIBLE ONE PIECE GARMENT

FIELD

[0001] This invention relates to a one-piece adult clothing item with pants legs that open on the inner inseam. More particular, this invention relates to a track that can seal and unseal the front and back lower sections of the lower portion of a garment to each other at an inner inseam in order to create an opening between the front and back sections in the lower part of the garment that can vary in size down to the pant legs of the garment.

BACKGROUND

[0002] A onesie is a type of loose-fitting casual jumpsuit or one-piece garment for adults, children, or infants. These items are made of a material such as cotton, fleece, or chenille. Many people wear these clothing items, loungewear or sleepwear such as pajamas. However, they have grown in popularity and have become fashionable clothing in some countries. Recently, the one-piece garment has become mainstream street and urban wear. Baby rompers and unique baby onesies are everywhere. Some of these onesies even come with built-in baby monitors.

[0003] In 1998 a company called Jumpin Jammerz made footed pajamas in adult sizes as a gimmick for a rock band. These onesie pajamas took off, and now onesies for men and women are widely available anywhere from major retail stores to online shopping websites. Rompers have also come into style as a casual look for women; however, they are less widespread than the pajama version. In addition to garments to lounge around in, various designs of these garments are showing up in public places. People are wearing these garments and extending that comfort feeling of these garments to outdoor activities. However, with the change in the environment from the privacy of a person's home to public areas, challenges in wearing these romper-type garments in public places have surfaced.

[0004] Some of these challenges pertain particularly to women. Because of the one-piece design, it can be difficult at times to remove the garment efficiently. In addition, essential activities such as going to the restroom can be challenging. Sometimes, a task may require one to partially or entirely remove the entire garment. Some women wearing a romper have gone to the lengths of being dehydrated because they cannot handle navigating and trying to go to the restroom while wearing the romper.

[0005] Other women express concern about having an accident if they pull the romper to one side. Another problem is when they finally pull it down, they are naked on the toilet while the romper sits in a pile on the floor. In addition to the physical challenges, there can be potentially embarrassing moments when one is at an event and takes an unusually long time in the restroom. Others in the group may begin to make assumptions about the person. The challenges related to restroom activities are only one area of concern and complaint regarding the onesie or romper.

[0006] Full-figured, plus-size, and larger women have even more challenges with these garments. However, these obstacles with romper garments are not just restricted to women. When a guy wears a garment in the pattern of a romper, they may never be more confused than when trying to take off their clothes while wearing the romper. They genuinely do not understand how these garments work.

[0007] Over time there have been efforts to address the particular challenges many women have with these one-piece garments. For example, U.S. Pat. No. 6,944,883 describes a jumpsuit for meeting a woman's needs. The jumpsuit has a circumferential fastener that fully connects the upper and lower portions of the suit when closed. When the fastener is fully opened, the lower portion is partially separated from the upper portion. When the woman squats, the lower portion may be pulled down the thighs and away from the crotch.

[0008] U.S. Pat. No. 5,014,356 describes a jumpsuit with an improved, utilitarian drop seat having a bodice attached to pants at the front waist seam. The pants have hidden, in-seam side pockets that facilitate the opening of the drop-seat area. The drop seat area has a back, elasticized waistband, and side tabs having fasteners that, when fastened, secure the drop seat in a closed position with the appearance of an ordinary jumpsuit.

[0009] U.S. Pat. No. 4,607,396 describes a coverall-type garment comprising an integrally formed upper blouse or shirt and a lower pants portion. The pants portion has an integrally formed panel to permit a person wearing the garment to use restroom facilities comfortably. The panel is uniquely constructed to be completely concealed and also as a fashion feature when the garment is being worn. The concealment is accomplished by forming the panel as part of the waistband, belt, and side pockets. The rear seam of the opening entrance to the side pockets also forms a seam for the panel so that seams for the forum are completely concealed. The flaps of the material forming the pocket also are constructed to unfold when the panel is released, providing a wide opening. U.S. Pat. No. 4,447,991 describes A unitary garment generally known as a "jumpsuit" with hidden access flaps in the seat portion that can be easily opened and closed to allow the wearer to use toilet facilities without completely removing the garment. The access flaps are formed from a horizontal separation across the garment back at the waist and an invisible zipper that starts at the crotch rear area and extends vertically to and intersects the waistline area at the separation. A piece of elasticized material is attached to the garment above the separation, extends downward, and covers the separation when the zipper is closed. A plurality of snaps or hook fasteners is spaced apart along the edges of the waist separation to secure the flaps to the upper waist portion of the garment. In another embodiment, the elasticized material is integral to the garment, giving an even more finished appearance to the garment.

[0010] The above designs implement a drop-seat approach or a flap approach to assisting women wearing these garments. In other garments, the implemented approach relates to expanding the pants leg. For example, U.S. Pat. No. **8,464,365** describes breakaway sports pants as having a slider that, when lifted beyond the mating teeth at the top of opposing zipper tracks, enables the user to disengage the zipper by pulling the tracks apart rather than sliding the zipper the length of the pants legs.

[0011] U.S. Pat. No. 8,127,370 describes breakaway sports pants, including right and left-side zippers that do not have catch mechanisms. When the zippers are zipped, right and left connectors hold the front and rear portions of the sports pants together and prevent the zippers from unzipping. However, when the right and left connectors are disengaged, the zippers quickly unzip to allow the removal

of the sports pants. In an embodiment of the invention, the zipper pull tabs include friction-enhancing material that catches on the connectors and upper portions of the pants to prevent inadvertent unzipping of the pants.

[0012] These ideas address the easier removal of pants using an external breakaway design. However, there remains a need for a romper or onesie design that provides the following:

[0013] Flexibility in putting on the garment.

[0014] Removing the garment.

[0015] Altering the configuration of the garment for ease and comfortability.

SUMMARY

[0016] A one-piece garment has an upper section in the form of a blouse or shirt. This upper section connects to the waistband section. The waistband section attaches to a bottom section in the design of trousers. These trousers have a pair of legs, an outer seam on each leg, and an inseam. This inseam extends through both legs and connects to form a single inseam. A fastener system, such as a zipper track, comprises the inseam of this one-piece garment. The fastener track can extend the full length of the inseam of the entire garment to open and close each leg of the trouser design. In addition, one or more zippers can attach to the zipper track to partially or wholly open the bottom trouser section of the garment as desired by the wearer. The ability to **10** open the trouser section of the garment gives the wearer the flexibility to reconfigure the trouser section to an alternate design of the garment.

DESCRIPTION OF THE DRAWINGS

[0017] FIG. **1** shows a conventional design of a one-piece garment design for wear by females.

[0018] FIG. **2** shows an embodiment of the present invention, with a zipper track forming the garment's inseam.

[0019] FIGS. **3**A and **3**B show a close-up of the components of the zipper system of the present invention.

DETAILED DESCRIPTION OF THE INVENTION

[0020] The one-piece commonly known by names such as a romper, jumpsuit, or coveralls comprises an upper section that covers a person's upper body or chest area and a lower section comprising a trouser design with legs. FIG. **1** shows a one-piece design for a garment worn by a woman. This garment **100** includes an upper blouse section **101** and a waistband **110** between the upper section and the lower **102**. This lower section comprises a trouser or pants design with a pair of legs **103** and bottom edges **108**. Each pant leg has an outer seam **104**.

[0021] A pant leg will usually comprise two garment pieces of the same shape sown together. The seam refers to the stitching line where the two fabrics are sown, connected, or attached together. Depending on the design, this seam **104** can extend up the pant leg to the waistband **110**. One can refer to this stitching line simply as the seam line, outer seam, or inseam.

[0022] In many designs, there is also an inseam **106** on the inner side of the pant leg. This inseam **106** serves the same function as the outer seam **104**. The inseams **106** extend up the pant legs and meet at a midpoint **111** in the middle of the lower section **102**. This midpoint **111** for the meeting of the inseams is at a position below the waistband **110**. This inseam extends from the midpoint **111** down to the bottom edges.

[0023] FIG. **2** shows an embodiment of the garment of the present invention, having a fastener track forming the inseam. Although one can implement various fastener track systems in this invention, this detailed description will use a zipper track system to illustrate the invention. Garment **200** comprises the upper section **201**. In this embodiment, the upper blouse section does not contain sleeves. The waistband **210** is a strip of material such as an elastic material or other fabric that encircles the waist. This waistband can be a component of the clothing item, or it can be a detached external element such as a belt. The waistband surrounds the waist and provides some confining properties to restrict the garment to the wearer. Finally, the bottom section **202** can be a trouser or shorts design with a pair of pant legs **203**. Although many garments have an outer seam on the pant legs, as shown in FIG. **1**, the pant legs can have a design with only an inseam **206**. In this invention, alternate embodiments can be with and without an outer seam on the pant legs. As shown, a zipper **214** track forms the inseam **206** of this embodiment. This track can extend in one continuous track along the inseam of both pant legs. In the alternative, each pant leg can have a separate zipper track **214** that runs from the midpoint **211** of the trousers to the bottom edge **208** of each pant leg.

[0024] FIG. **3**A illustrates a close-up view of the components of the zipper element and the system of the present invention. The zipper element is along the pants leg inseam **306**. The zipper element of this invention comprises a zipper track **314** having the teeth **316**, the slider **312**, a pull handle **313**, the tape **318**, and the stop **320**. The tape can be a textile portion of the zipper that holds the teeth **316**. This tape element of the zipper is sewn into the inseam of the pant leg. On either side of the zipper tape **318**, the teeth **316** connect to close the zipper. FIG. **3**B, shows how the slider and handle of the zipper can move along the track on the inseam **306** to engage the zipper teeth to open and close the zipper. These teeth mesh, or engage, with each other when passed through the slider. Various materials can comprise the teeth. These materials can include standard metal, plastic, nylon, or polyester. The slider **312**, when pulled by the slider handle **313**, joins or separates the elements when the zipper is opened or closed. Various types of sliders are available, depending on their use. Stop **320** is located at the bottom or top part of the zipper, preventing the slider from pulling off the teeth. Finally, an optional zipper component can be an insert. The insertion pin is located at the bottom of the zipper on one side of the zipper tape, opposite the starter box. The insertion pin is inserted through the slider and connects to the starter box, which enables the zipper to be closed via the slider.

[0025] Various embodiments of the present invention can include zipper elements at each endpoint of each pant leg. Each endpoint would also have a stop and insertion pin. In this embodiment, the wearer can completely separate the pant legs into the front and back sides. A wearer can also accomplish this front and rear pants leg separation with a single zipper design. A vital feature of all embodiments is that the zipper has a continuous track and is not separated at the midpoint **211** of the trousers. The capability to open the bottom section **202** of the garment at the midpoint provides a significant benefit to the wearer over conventional designs.

[0026] Another invention embodiment enables the wearer to convert the long pant garment into a garment with shorter legs. This embodiment comprises two zipper elements. There will be one zipper element per pant leg. In this embodiment, the wearer unzips the pants from the bottom up toward the midpoint **211**. The zippers do not meet, allowing a section of the pants at the midpoint to remain attached. Once the wearer has unzipped the pant legs **203**, the bottom edge will form two separate endpoints on the inner side of the leg. The wearer can fold these ends upward and attach the endpoints to hooks or fasteners on the garment's waistband. Other amenities can also be added to the appearance of this reconfigured garment.

[0027] The ability to alter the pants legs provides substantial flexibility to the garment of the present invention. This flexibility enables the wearer to maneuver the garment as desired and to create an opening in the lower portion of the garment as desired. In addition, this maneuverability gives the wearer peace of mind knowing that they can easily alter the garment to meet a specific need. In particular for females, this configuration provides advantages over the conventional drop-seat designs of one-piece garments. This invention enables a female to easily and quickly open the bottom of this for restroom purposes without the need to remove the entire garment. This flexibility gives the person assurances and confidence not available with current one-piece garment designs.

[0028] While the description of embodiments thereof has illustrated the present invention, and while the embodiments have been described in some detail, it is not the applicant's intention to restrict or limit the scope of the invention to such information. Additional advantages and modifications will readily appear to those skilled in the art. Moreover, the invention is broader than the specific details, representative apparatus and methods, and illustrative examples shown and described in its broader aspects. Accordingly, departures may be made from such details without departing from the spirit or scope of the applicant's general inventive concept.

We claim:

1. A one-piece clothing garment in the nature of a jumpsuit comprising:

an upper section for covering portion of a wearer's body above a wearer's waistline;

a waistline section of the one-piece clothing garment below said upper section; and

a lower section of the one-piece clothing garment, below said waistline section,

having a pants design comprising:

a) a front portion;

b) a rear portion symmetrical to said front portion and affixed to said front portion to form lower section having an upper waist edge and left and right pant legs each pant leg having bottom edges and inner vertical edges that form a vertical and continuous inseam extending throughout both pant legs and a mid section of said lower section, said inseam separating said front and back portions of said lower section of the one-piece clothing garment and each said pant legs terminating each at a bottom end; and

c) a connecting element incorporated in said continuous inseam to connect said front and back portions of said lower section of the one-piece clothing garment to allow opening of said lower section as desired by garment wearer.

2. The one-piece clothing garment as described in claim **1** wherein said connecting element comprises a zipper element having:

zipper tape attached to said inner vertical edges and forming a track;

zipper teeth attached to said track;

zipper slider attached an end of said track and engages said zipper teeth; and

zipper pull handle attached to said zipper slider such that when said zipper pull handled is pulled, said zipper slider moves along said track, engages said zipper teeth such that these teeth lock together to seal said inseam and front and back portions of said lower section of said one-piece clothing garment or disengages said zipper teeth to unseal said inseam and front and back portions of said lower section of said one- piece clothing garment.

3. The one-piece clothing garment as described in claim **2** said zipper element further comprises insertion pins at the bottom ends of said pant legs to initiate said zipper on the track.

4. The one-piece clothing garment as described in claim **3** further comprising a second zipper element as part of the formed track, both said zipper elements used to connect and disconnect front and back portions of said lower section of said one-piece garment.

5. The one-piece clothing garment as described in claim **1** wherein said inseam at the bottom of each said pant leg is permanently closed.

6. The one-piece clothing garment as described in claim **1** wherein said connecting element comprises a snap track element having:

zipper tape attached to said inner vertical edges and having a groove and insert in the track where said insert would fit into the groove to form a seal and connect front and back portions of said lower section of said garment.

* * * * *