June 11, 1940. W. C. BARNES ET AL 2,204,396

MAGNETIC CLAMP

Filed March 12, 1937

Fig. 1

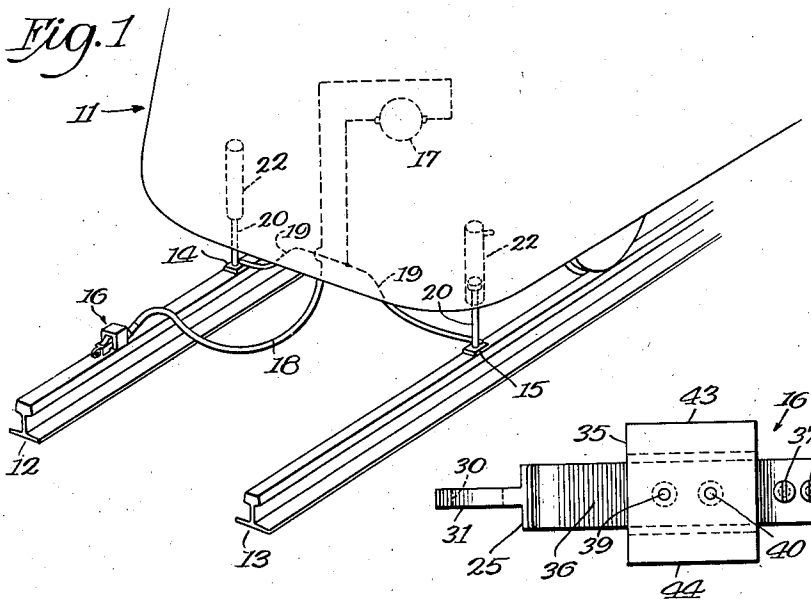

Fig. 2

Fig. 4

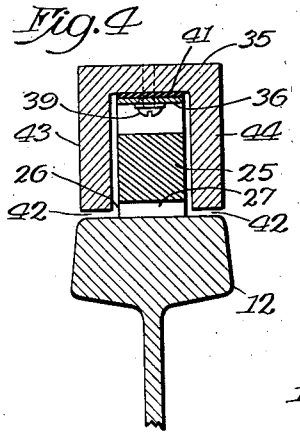

Fig. 3

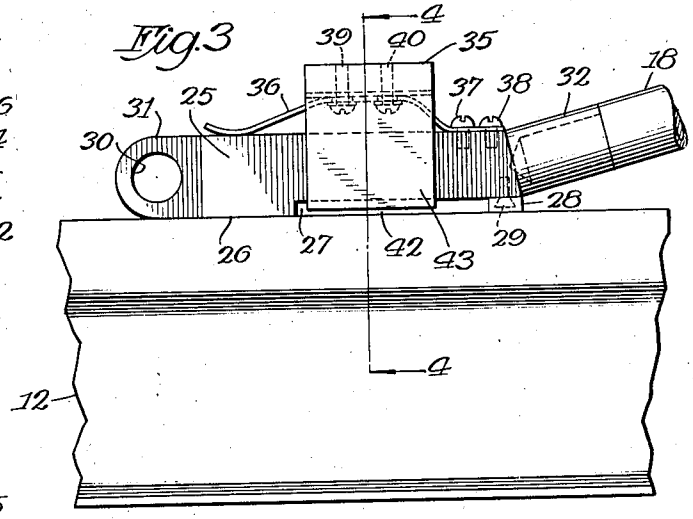

Fig. 5

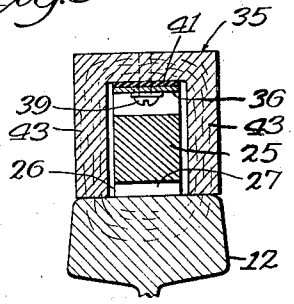

Inventors:
Walter C. Barnes
Henry W. Keevil
By Gilson, Mann & Co
Attys

Patented June 11, 1940 2,204,396

UNITED STATES PATENT OFFICE

2,204,396

MAGNETIC CLAMP

Walter C. Barnes, Lake Bluff, and Henry W. Keevil, Highland Park, Ill.

Application March 12, 1937, Serial No. 130,566

6 Claims. (Cl. 173—273)

The present invention relates to a magnetic clamp for quickly establishing a pressure contact between an electrical conductor and a metallic body. It is primarily intended for use in connection with flaw detector apparatus of the type which is now commonly used by American railroads for locating hidden fissures in rails, but its use is not necessarily limited to this field.

The advantages of the clamp will become apparent as the disclosure proceeds and the description is read in conjunction with the accompanying drawing in which

Fig. 1 is a diagrammatic view of a rail test car showing the compressed air contact suspended from the car and the magnetic rail clamp for completing the electrical circuit over one of the rails;

Fig. 2 is an enlarged plan view of the rail clamp shown in Fig. 1;

Fig. 3 is a side elevational view of the clamp shown in Fig. 2;

Fig. 4 is a transverse sectional view taken on the line 4—4 of Fig. 3 and showing the relative positions of the various parts of the clamp before the metallic yoke is forced into contact with the rail; and

Fig. 5 is a sectional view corresponding to Fig. 4 but showing the relation of the elements when the yoke is magnetically gripping the rail.

In the illustrative embodiment of the invention in which the magnetic clamp is shown associated with the detector car for locating flaws in the track, the clamp constitutes a part of the hand check apparatus which is used to more accurately locate and analyze a flaw which previously had been approximately located by means of the flaw detection apparatus carried by the car; and since this latter apparatus constitutes no part of the present invention, there is no necessity to describe it here.

The hand check apparatus commonly used operates on the principle that when a current of constant strength is passed through a rail the difference of potential between two points a known distance apart moved along the rail will be a constant value so long as the rail is a homogeneous body, but should these points traverse a portion of the rail which is non-homogeneous there will be a change in this potential difference.

Apparatus used for this purpose usually consists of a pair of contact points spaced a known distance apart and adapted to engage the top surface of the rail to be tested. A current is passed through the rail in some suitable manner and as the contact points are moved over the energized portion of the rail the potential difference between the contact points is registered on a voltmeter placed in the circuit with the contact points. The voltmeter reading will remain substantially constant until a flaw or discontinuity is traversed, and then there will be a comparatively sharp deflection of the voltmeter needle.

For the purpose of passing electrical current through the rail, it is convenient to have one contact mounted on the test car and operated by compressed air and the other contact manually applied to the rail. This latter contact is the subject matter of the present invention.

A preferred form of the invention has been shown in the drawing and will be described for the purpose of complying with section 4888 of the Revised Statutes, but it will be understood that the appended claims are not limited to the specific disclosure but should be construed as broadly as the prior art will permit.

Referring now to the drawing, Fig. 1 shows a rail test car generally indicated at 11 adapted to travel along rails 12 and 13 and provided with suitable rail contact members 14 and 15 each of which is secured to the end of a shaft 20 constituting a part of the hand check cylinder equipment generally indicated at 22. The cylinders are mounted on the car body in any suitable manner, and are operatively connected to a source of compressed air in response to controls operated, preferably, from within the car.

A clamp 16 constitutes the other electrical contact for completing the circuit. Electrical current may be furnished by means of a generator 17 mounted in the car and connected in series with the rail contacts through conductors 18 and 19.

The magnetic clamp 16 is best shown in Figs. 2–5, inclusive, and comprises a terminal block 25, preferably of brass or copper, and having a rail-engaging head 26 projecting downwardly beyond the main body of the block. A heel 28 of a suitable insulating material such as Bakelite is secured to the opposite end of the block by means of a countersunk machine screw 29 in order to limit the passage of current from the block to the rail through the head 26. Thus it is seen that all of the current passing into the rail must necessarily enter at the forward end of the terminal block 25 and then pass backwardly through the rail to the contact 14. The reason for this arrangement is to insure a relatively strong magnetic field around the terminal block

in the vicinity of a magnetizable yoke **35** which straddles the terminal block, as best shown in Figs. 3–5, inclusive.

The yoke **35** may be made of mild steel or other suitable magnetizable material and is supported on the terminal block **25** by means of a leaf spring **36** secured to the terminal block by machine screws **37** and **38** and to the yoke or armature **35** by screws **39** and **40**. Insulating material **41** such as Bakelite is inserted between the spring and the yoke in order to prevent current from passing through the spring **36** and yoke **35** to the rail when the yoke is in engagement with the rail.

In its normal position the yoke **35** is held slightly away from the rail by the spring **36** as shown at **42**, and in actual practice a distance of approximately $\frac{3}{16}$ of an inch has been found to be satisfactory. A similar distance should be maintained between the legs **43** and **44** of the yoke and the block **25** so that the current in the block cannot pass into the rail through the legs of the yoke.

The spring **36** must be sufficiently strong to hold the yoke normally out of engagement with the rail, although it must permit engagement when reasonable manual force is applied at the top of the yoke.

When it is desired to make a hand check of a certain portion of the rail **12**, the test car is stopped and the contact **14** lowered against the rail. The hand clamp **16** is then removed from the side of the car, where it is suspended when not in use, on a suitable hook (not shown) which passes through an opening **30** in a boss **31** at the head of the terminal block, and is placed on the rail as shown in Fig. 1. The generator **17** is then placed into operation causing a current to flow through the conductor **18**, secured to an extension **32** of the terminal block **25**, and thence into the rail at **26** as shown in Fig. 3. This current passing through the terminal block **25** creates a magnetic field around the block, and since lines of magnetic flux take the path of least resistance, this field is concentrated in the yoke **35**. In the normal position of the yoke, however, due to the gap in the magnetic circuit, a relatively high reluctance is present in the magnetic circuit. When the yoke is manually urged into contact with the rail as shown in Fig. 5, this air gap is closed thereby greatly reducing the reluctance in the circuit and causing the yoke to firmly grip the rail. This lowering of the yoke **35** causes the spring **36** to press down on the two ends of the terminal block **25**, and as long as the yoke is in engagement with the rail, the terminal block is held securely against the rail by the spring. The magnetic clamp may easily be removed from the track by merely shutting off the generator, whereupon the magnetic field in the yoke **35** collapses and the spring **36** lifts the yoke from the rail.

We claim:

1. A magnetic clamp adapted to establish a pressure contact between an electrical conductor and a magnetizable body, said clamp comprising a terminal block, an armature normally held out of contact with the block when said block is resting on the body and being so arranged that a flow of current through the block will magnetize the armature, said armature being adapted to cooperate with the magnetizable body to urge the block against the body whenever the two are in contact and current is flowing therebetween.

2. A magnetizable clamp for establishing a pressure contact between an electrical conductor and a magnetizable body, said clamp including a terminal block, an armature resiliently supported by the terminal block and held normally out of contact with the magnetizable body, said armature being arranged so that it becomes magnetized by the flux surrounding the block when a current is passed through the block and being adapted to cooperate with the terminal block to force the latter against the body whenever the two are in contact and current is passing therebetween.

3. A magnetic clamp for establishing a pressure contact between an electrical conductor and a magnetizable body, said clamp including a terminal block adapted to electrically engage the magnetizable body at one end only of said block, a lead secured to the other end of the block, an armature resiliently supported on the block between the ends thereof and so arranged that it will become magnetized by the flux surrounding the block when a current is passed through the block, said armature being held normally out of contact with the magnetizable body and being adapted to urge the terminal block against the body whenever a current is flowing between the terminal block and the body.

4. A magnetic clamp adapted to establish a pressure contact between an electrical conductor and a magnetizable body, said clamp comprising a terminal block, adapted to electrically contact the magnetizable body only at the forward end of the block, the conductor being secured to the other end of the block, an armature associated with the block and supported between the ends thereof, said armature being held normally out of contact with the magnetizable body but being so arranged that a current passing through the block will create a magnetic field around the block which will magnetize the armature, and means associated with the armature and block for causing the former to urge the latter against the magnetizable body when a current is passing between the block and the body.

5. A magnetic clamp for establishing a pressure contact between an electrical conductor and a magnetizable body, said clamp including a terminal block, an armature, a spring for supporting the armature on the block and holding the armature normally out of contact with the magnetizable body, said armature being arranged so that it becomes magnetized by the flux surrounding the block when a current is passed through the block and being adapted to cooperate with the terminal block to force the latter against the body whenever the two are in contact and current is passing therebetween.

6. A magnetic clamp adapted to establish a pressure contact between an electrical conductor and a magnetizable body comprising a terminal block having contact means on one end for establishing an electrical contact with the magnetizable body and an electrical conductor attached to the other end of the block, an iron circuit associated with the terminal block between its ends so that, when the block is engaging the magnetizable body and current is passing through the electrical conductor and terminal block into the magnetizable body, a magnetic field is produced in the iron circuit to force the iron circuit and associated terminal block toward the magnetizable body.

WALTER C. BARNES.
HENRY W. KEEVIL.