July 31, 1934. J. E. JOHANSON 1,968,557

RADIORECEIVER

Filed Feb. 6, 1931 3 Sheets-Sheet 1

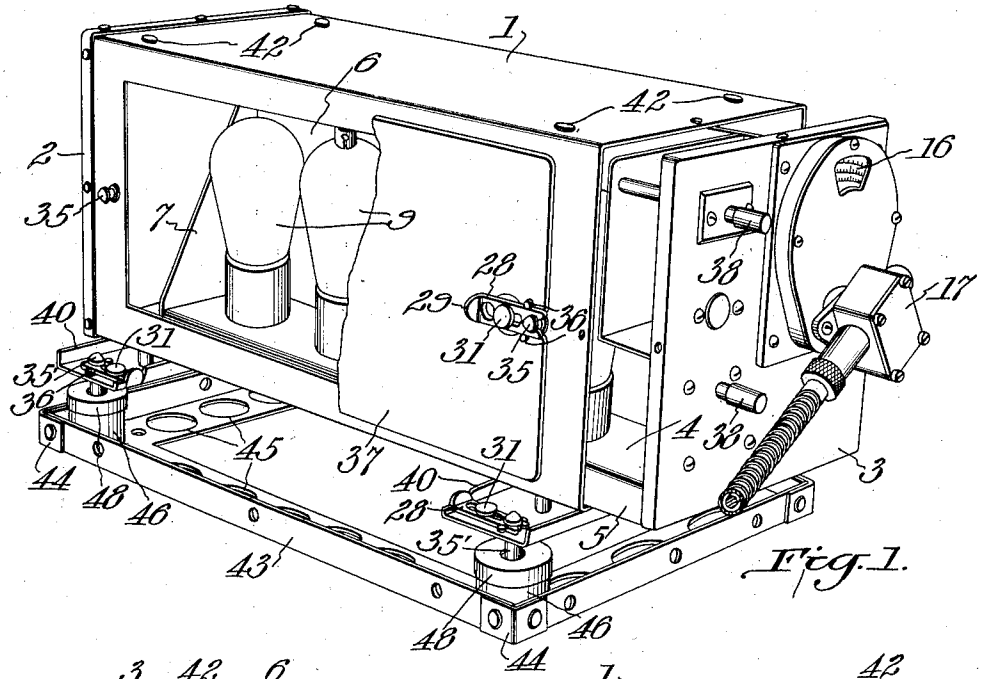

Fig. 1.

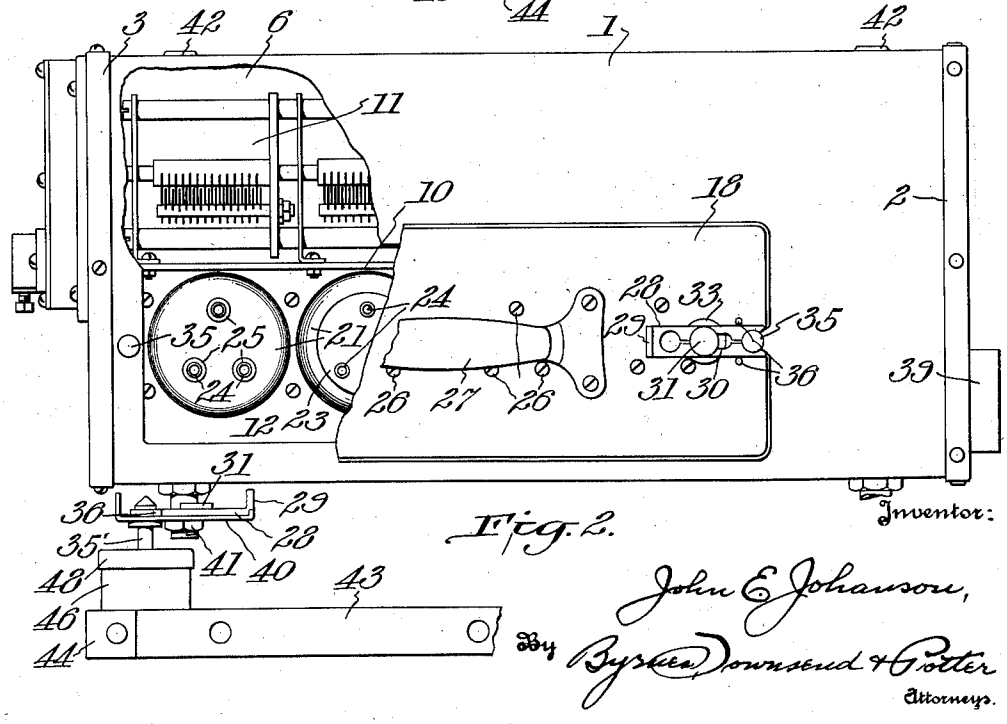

Fig. 2.

Inventor:

John E. Johanson,

By Byrnes Townsend & Potter

Attorneys.

July 31, 1934. J. E. JOHANSON 1,968,557

RADIORECEIVER

Filed Feb. 6, 1931 3 Sheets-Sheet 2

Fig. 3.

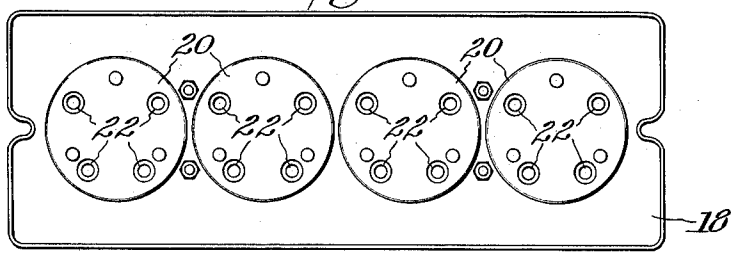

Fig. 4.

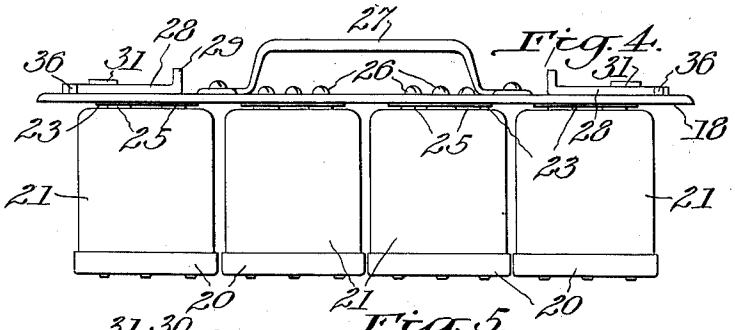

Fig. 5.

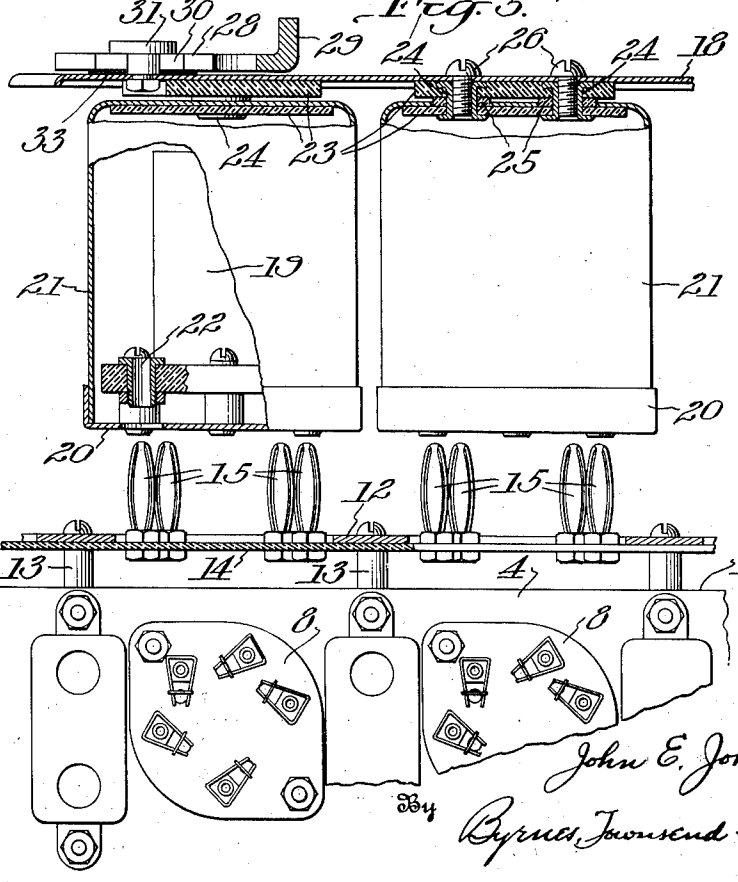

Inventor:
John E. Johanson,
By Byrnes, Townsend & Potter,
Attorneys.

July 31, 1934. J. E. JOHANSON 1,968,557

RADIORECEIVER

Filed Feb. 6, 1931 3 Sheets-Sheet 3

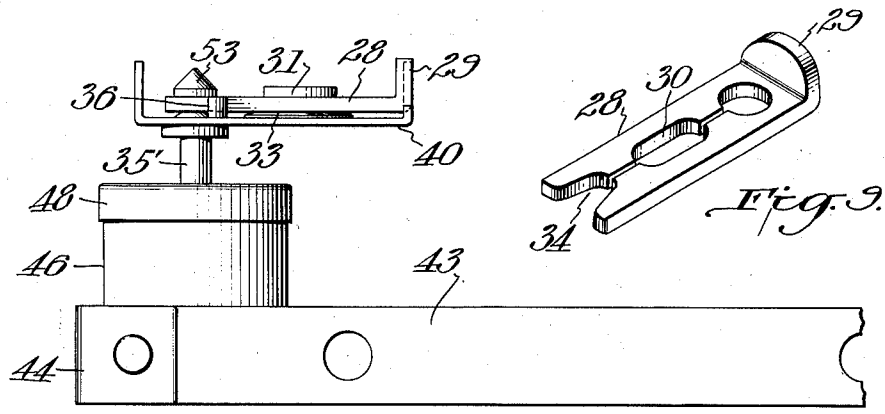

Fig. 7.

Fig. 9.

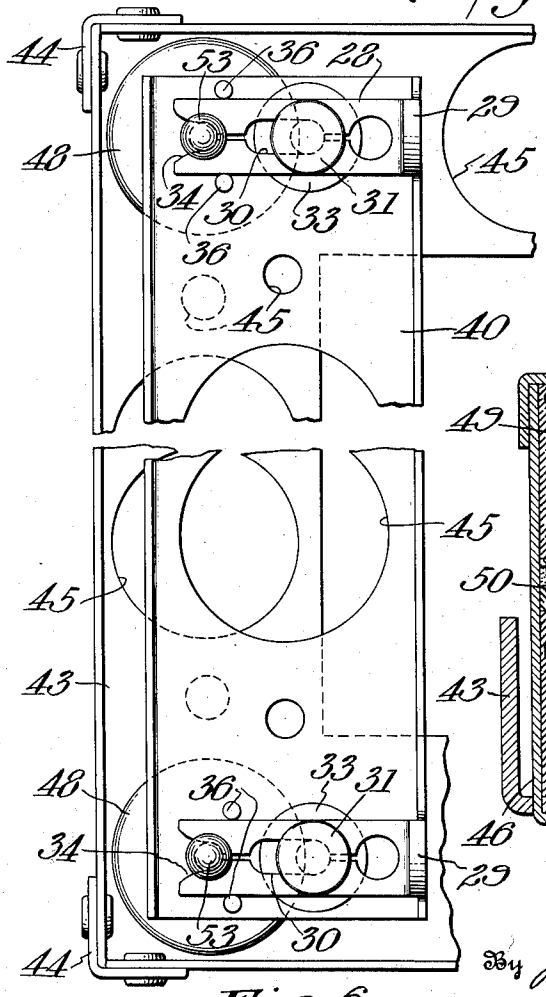

Fig. 6.

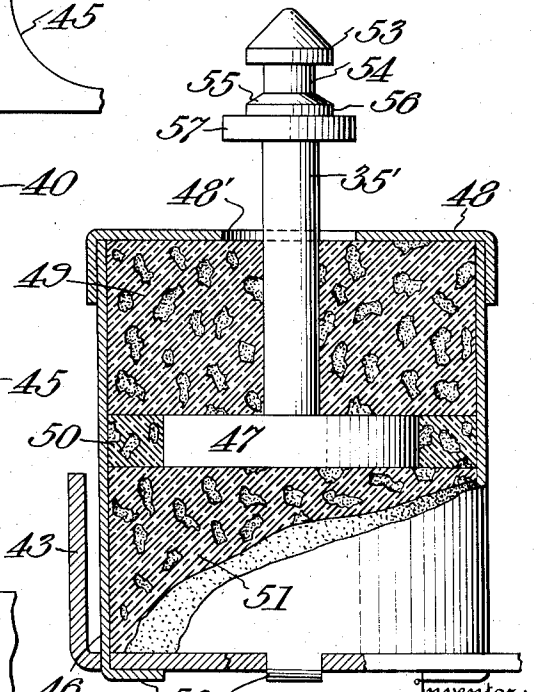

Fig. 8.

Inventor:
John E. Johanson,
By Byrnes Townsend & Potter,
Attorneys.

Patented July 31, 1934 1,968,557

UNITED STATES PATENT OFFICE

1,968,557

RADIORECEIVER

John E. Johanson, Boonton, N. J., assignor, by mesne assignments, to Radio Corporation of America, New York, N. Y., a corporation of Delaware

Application February 6, 1931, Serial No. 513,999

6 Claims. (Cl. 250—14)

This invention relates to radio receivers and particularly to radio receivers adapted for use on vehicles, especially aircraft.

In the design of radio receivers for installation on vehicles, especially aircraft, the principal considerations are that the receivers be small, compact, light in weight and sufficiently rugged to withstand the jarring and vibration inherent in the operation of the vehicle.

An object of the present invention is to provide a radio receiver of rugged construction, light weight and small size. A further object is to provide a radio receiver of the type stated which includes a particularly efficient shock absorbing system for preventing the vibration of the vehicle from being transmitted to the receiver. Further objects relate to the provision of particular structural details which contribute to the small size and compact construction of the receiver. More particularly, objects are to provide simple and efficient fastening means for facilitating the removal and replacement of component parts of the receiver system.

These and other objects of the invention will be apparent from the following specification, when taken with the accompanying drawings, in which:

Fig. 1 is a perspective view of one particular embodiment of the invention, with the chassis shown partly withdrawn from the casing, and parts broken away to show the interior thereof,

Fig. 2 is a partial elevational view of the receiver, with parts broken away,

Figs. 3 and 4 are elevational and plan views, respectively, of the removable coil unit,

Fig. 5 is a fragmentary view showing a portion of the coil unit and the terminal plate cooperating therewith,

Figs. 6 and 7 are fragmentary plan and elevational views of the mounting frame which supports the receiver,

Fig. 8 is an enlarged detail view, partly in section, of a shock absorber unit, and

Fig. 9 is a perspective view of the latch used for connecting parts of the receiver system.

In the drawings, the reference numeral 1 identifies the receiver casing which is of box or parallelopipedal form, having one fixed end 2, and a removable end member 3 which is connected to the chassis upon which the component parts of the electrical system are mounted.

The principal member of the chassis is a plate which, in transverse section, is of generally Z-shape, comprising a shelf 4 having a short depending leg 5 at one edge of the chassis and an upright section 6 which lies approximately at the medial vertical plane of the chassis. At the rear, a reinforcing plate 7 extends transversely of the chassis and may, if desired, be integral with and bent at right angles to the central section 6 of the main chassis plate.

The shelf 5 carries sockets 8, for receiving the tubes 9, and the shallow space below the shelf provides room for lead wires, by-pass condensers and other electrical elements of the receiver.

As shown in Fig. 2, the space at the opposite side of the central plate 6 is divided horizontally into two approximately equal compartments by a transverse plate 10 which is secured to plate 6 and which serves as a support for a gang condenser assembly 11. Below the transverse plate 10, a metal plate 12 is supported from and parallel to the plate 6 by posts 13, the plate 12 depending below the shelf 5 of the main chassis element to complete the shielding of the compartment below the shelf. The posts 13 also support a sheet 14 of insulating material which carries groups of resilient terminals 15, the metal plate 12 being cut away, as shown in Fig. 5, to prevent short circuiting of the same.

Appropriate electrical connections are made between terminals 15 and the other electrical elements of the receiver so that, upon connecting suitable coils or transformers to the terminals, the receiver may be tuned over a band of frequencies by adjusting the gang condenser unit 11. As shown in Fig. 1, the shaft of the gang condenser carries a dial 16 and is adapted to be operated by a reduction gear unit 17 of a remote control device. One form of remote control device is described and claimed in the copending application of Drake and Johanson, Ser. No. 502,592, filed Dec. 15, 1930, but it is apparent that any appropriate system may be used for adjusting the condenser shaft.

The side of casing 1 is provided with an opening to permit insertion of the coils and, in accordance with the invention, all of the coils are mounted as a unit upon the closure plate 18 which covers the opening. As shown in Figs. 3, 4 and 5, each coil assembly is wound upon a suitable insulating form 19 which is mounted on the base 20 of a "shield can" 21 and has tubular socket terminals 22 adapted to fit over the terminal posts 15. The cover or base 20 of each can is, of course, provided with apertures through which the terminal post 15 projects to engage the socket terminals 22.

In a receiver of high sensitivity, it is essential that the individual shield cans must be insulated from the plate 18 to prevent stray couplings be-

tween the coils of different stages when all of the shield cans 21 are mounted on the closure plate 18. A suitable mounting system for the coil cans is described and claimed in the copending application of Frederick H. Drake, Ser. No. 513,993, filed Feb. 6, 1931, Patent No. 1,938,656, dated December 12, 1933 and is illustrated in Fig. 5 of the drawings.

Disks 23 of insulating material are secured to each face of the ends of the cans 21 and are held thereto by hollow rivets 24 which are insulated from the cans by small washers 25. The rivets have internal threads for receiving screws 26 which secure the cans to the closure plate 18. The washers 25 are preferably slightly thicker than the end wall of the cans to permit a slight rocking movement of the cans when the assembly is applied to the terminal posts 15. The closure plate 18 is provided with a handle 27 to facilitate the connection of the coil assembly to or for its removal from the terminal posts.

As it is frequently desirable to operate a receiver over different frequency ranges, particularly in the case of aircraft radio receivers, it will be apparent that the mounting of all of the coils as a unit upon a single plate permits a rapid change of the frequency range to which the receiver may be tuned. However, it is essential that a simple, rugged and absolutely reliable latch or locking system be employed for holding the coil unit in place upon the receiver.

As shown in Figs. 2, 5 and 9, the latch takes the form of a slide 28 which has an upturned end or thumb piece 29 against which pressure may be applied to move the slide. The slide 28 is split longitudinally throughout the greater part of its length and has an elongated central slot 30 through which extends the headed post 31 which is secured to the plate 18 by a nut 32. A spring washer 33 is located between the slide 28 and plate 18 to provide sufficient frictional resistance to prevent inadvertent movement of the slide. The outer end of the slide is notched, as at 34, to fit into the reduced neck section of a locking pin 35 on the casing 1. Guide studs 36 are secured to the plate 18 at each side of and adjacent the outer end of the slide 28 to constrain the latter to approximately rectilinear movement. The same type of latch and pin is preferably used throughout the receiver assembly to secure the parts in position, and the construction of the locking pin will be described in detail hereinafter.

Reverting to Fig. 1, it will be seen that the side of casing 1 adjacent the shelf 5 is cut away to permit insertion and removal of the tubes, the opening being closed by a plate 37 which carries latches 28 for co-operation with pins 35 on the casing to secure the plate to the casing.

The end plate 3 of the casing is provided with antenna and ground terminals 38, and the fixed end plate 2 has a socket terminal 39 for receiving a plug connector, not shown, in which the battery leads terminate.

The receiver casing 1 is secured to a pair of transverse channel members 40 by studs 41 which extend into openings in the bottom wall of the casing 1. Similar openings are provided in the top wall of the casing and are closed by removable plugs 42. By transferring the channels 40 to the top wall, the receiver may be suspended from an overhead support.

The channels 40 extend slightly beyond the side walls of the casing, and carry latches 28 for engagement with pins 35′ of the shock absorber units which are mounted at the corners of a rectangular supporting frame 43. For maximum rigidity, the frame is preferably made from a single sheet of metal, the edges being turned up and secured at the corners by riveted angles 44. The channels 40 and frame 43 may be provided with a plurality of apertures 45 to reduce the weight of these parts without substantially reducing their resistance to any strain incident to normal service.

As shown in Fig. 8, the shock absorber units comprise cylinders 46 in which the enlarged lower ends 47 of the pins 35′ are yieldingly supported on sponge rubber. The cylinders 46 have one end closed by a removable cap 48 which is provided with an aperture 48′ of substantially larger diameter than the shank of the pin 35′. An annular section or thick washer 49 of sponge rubber surrounds the shank of the pin 35′ and a similar washer 50 fills the space between the enlarged end 47 of the pin and the cylinder wall, the lower portion of the cylinder being filled by a thick disk 51 of rubber. The lower or open end of the cylinder 46 terminates in lugs 52 which extend through slots in the frame 43 and are bent over to hold the cylinder in place.

The preferred form of the pin construction which receives the latches 28 is shown in Fig. 8. Below an enlarged head 53, the pin has a neck section of reduced diameter about which the notched end of the latch 28 fits, the length of this cylindrical section being approximately the same as the thickness of the slide 28. Below the neck 54, the pin has a short conical section 55 which assists in guiding the latch into engagement with the cylindrical neck section 54. The conical portion 55 merges into a short cylindrical portion 56 which rises above the upper surface of an enlarged section 57. The combined axial length of the sections 55 and 56 is such that the slide 28 comes at the level of the neck section 54 when the channel 40 rests upon the upper surface of the enlarged section or supporting ring 57. In the case of the locking pins 35 that are fixed to the casing 1 for securing the closure plates 18 and 37 in place, the outer surface of the casing wall corresponds to the upper surface of the bearing ring 57 of the pins 35′.

In actual service on aircraft, the receiver has been found to be perfectly stable in operation in spite of the excessive vibration encountered on some planes. The electrical operation has been satisfactory and the usual difficulties arising from a shifting of the physical position of the parts due to loosening of the attaching members has not been encountered. The frequency range of the receiver may be quickly changed by removing one coil assembly and substituting another having inductances of different magnitude, and the entire receiver may be removed by releasing the latches which hold the channels 40 to the frame.

It will be apparent that the invention is not restricted to the exact physical construction illustrated in the accompanying drawings, but that various changes may be made in the several parts, their relative size, shape and arrangement without departing from the spirit of the invention as set forth in the following claims.

I claim:

1. In a radio receiver, a box-like casing; a chassis member within said casing and comprising a plate having a short leg adjacent one edge of said casing, a shelf supporting tube sockets, and a vertical section dividing the space within said casing into two compartments; a gang con-

denser supported from said plate in the upper portion of the compartment on the side of said vertical section opposite said sockets, and means for removably mounting interstage coupling coils in the space below said condenser.

2. The invention as set forth in claim 1, wherein the casing wall opposite said coil mounting means is provided with an opening, in combination with a closure for said opening, shield cans carried by said closure, and coils on said cans and provided with means for effecting electrical connections with said coil mounting means.

3. A shock absorbing mounting for a radio receiver comprising a frame, a cylinder mounted on said frame, a supporting member for said radio receiver extending into said cylinder and cushioning means disposed in said cylinder and surrounding that portion of said supporting means which is disposed in said cylinder.

4. A shock absorbing mounting for a radio receiver comprising, a cylinder, a supporting member having an enlarged portion disposed in said cylinder, and another portion projecting therefrom, and cushioning means disposed between said cylinder and the portion of said supporting means within the same.

5. In a radio receiver the combination with a casing of supporting means secured to one wall of said casing and extending approximately parallel to each other and projecting beyond the edges of the casing wall, a frame, means securing said supporting means to said frame comprising a plurality of shock absorbing mountings each thereof comprising a cylinder mounted on said frame, a supporting member partially extending into said cylinder and cushioning means disposed in said cylinder and surrounding that portion of said supporting member which is disposed in the cylinder, the projecting portions of said supporting means being adapted respectively to cooperate with the portions of said supporting members which extend outside of said cylinders.

6. A radio receiver comprising a casing, a chassis frame having a Z-shaped transverse cross-section disposed in said casing and forming separate chambers therein, sockets in one of said chambers for receiving vacuum tubes, and tuned interstage couplings comprising inductance and tuning condensers in the other of said chambers, supporting means secured to one wall of said casing and projecting beyond the edges of the casing wall, a frame member, means securing said supporting means to said frame member comprising a plurality of sharp absorbing mountings each thereof comprising a cylinder mounted on said frame member, a supporting member partially extending into said cylinder and cushioning means disposed in said cylinder and surrounding that portion of said supporting member which is disposed in the cylinder, the projecting portions of said supporting means being adapted respectively to cooperate with the portions of said supporting members extending outside of the cylinders.

JOHN E. JOHANSON.