July 9, 1957 C. H. KENNEDY, JR 2,798,584

POWER ACTUATED TYPING MECHANISMS FOR BUSINESS MACHINES

Filed July 8, 1955 5 Sheets-Sheet 1

FIG. 1

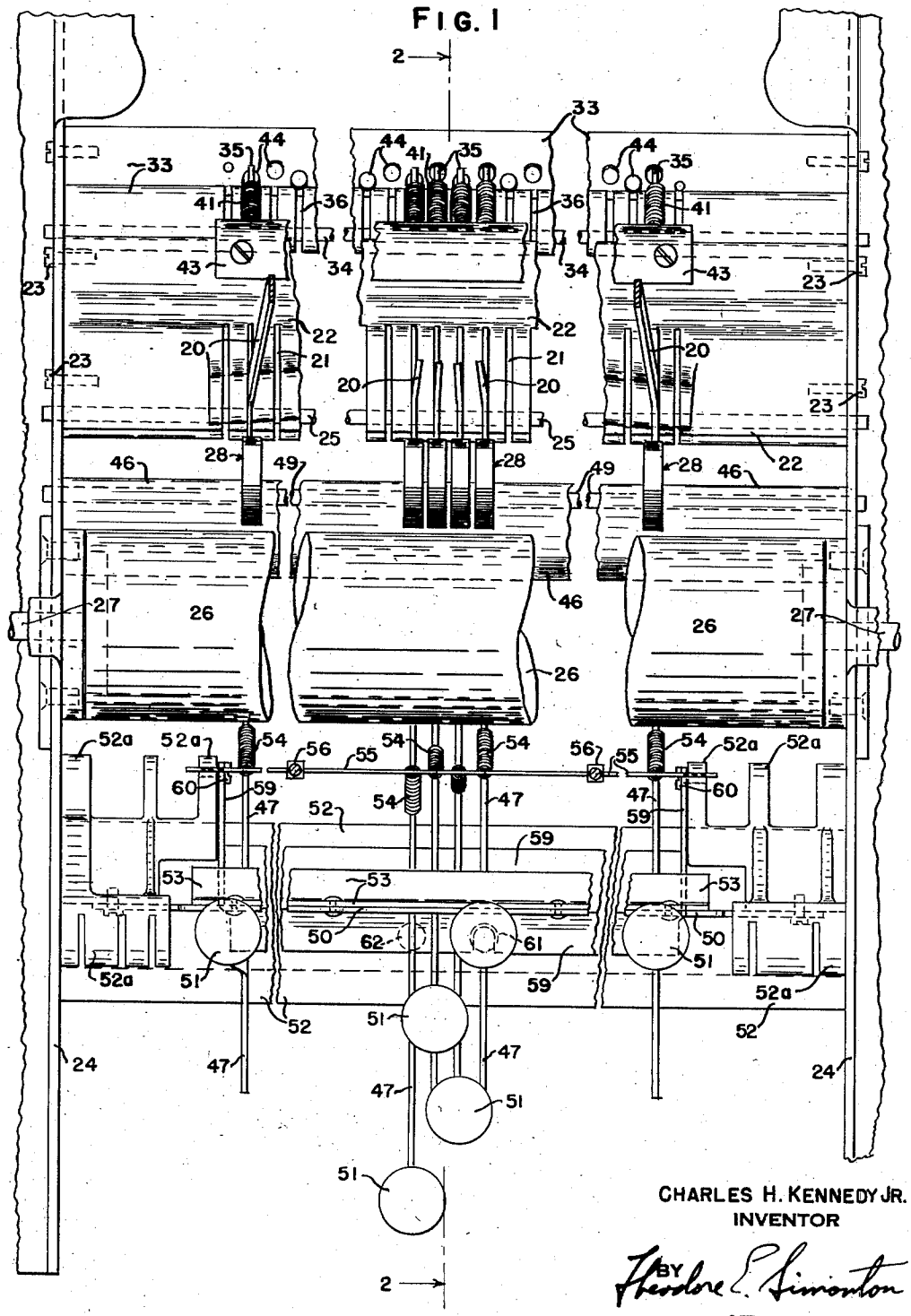

CHARLES H. KENNEDY JR.
INVENTOR

BY Theodore L. Simonton

ATTORNEY

July 9, 1957 C. H. KENNEDY, JR 2,798,584

POWER ACTUATED TYPING MECHANISMS FOR BUSINESS MACHINES

Filed July 8, 1955 5 Sheets-Sheet 2

FIG. 2

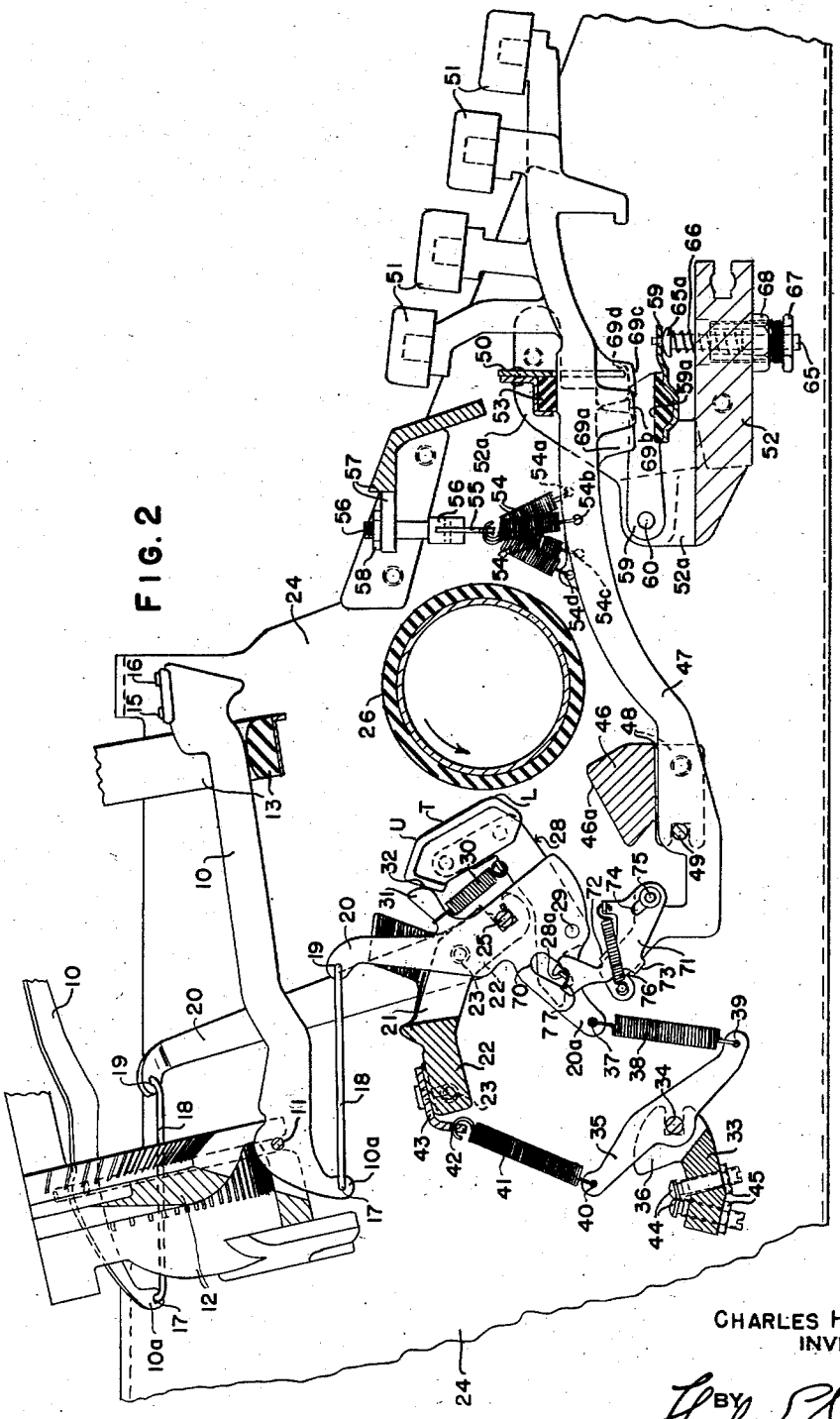

CHARLES H. KENNEDY JR.
INVENTOR

BY Theodore L. Simonton
ATTORNEY

July 9, 1957 C. H. KENNEDY, JR 2,798,584

POWER ACTUATED TYPING MECHANISMS FOR BUSINESS MACHINES

Filed July 8, 1955 5 Sheets-Sheet 3

FIG. 3

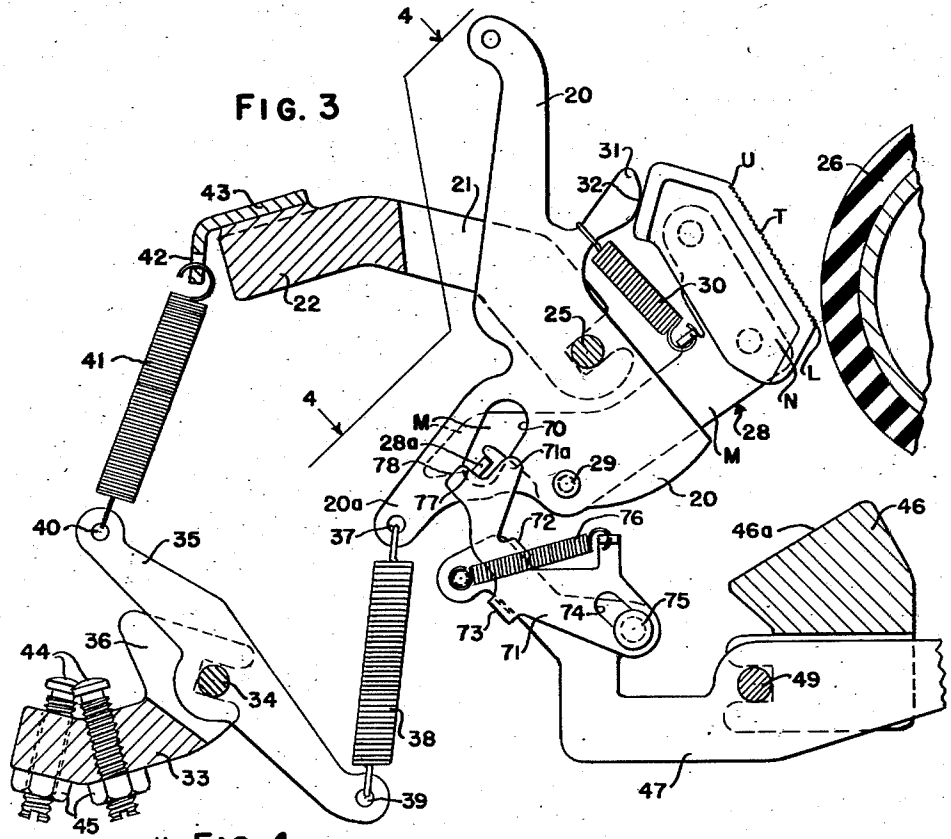

FIG. 4

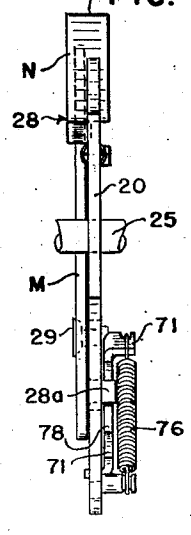

FIG. 5

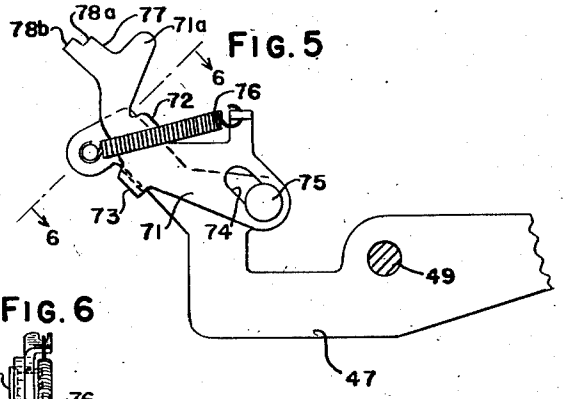

FIG. 6

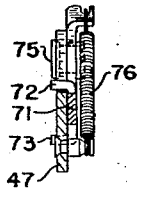

CHARLES H. KENNEDY JR.
INVENTOR

BY Theodore L. Simonton
ATTORNEY

July 9, 1957 C. H. KENNEDY, JR 2,798,584

POWER ACTUATED TYPING MECHANISMS FOR BUSINESS MACHINES

Filed July 8, 1955 5 Sheets-Sheet 4

FIG. 7

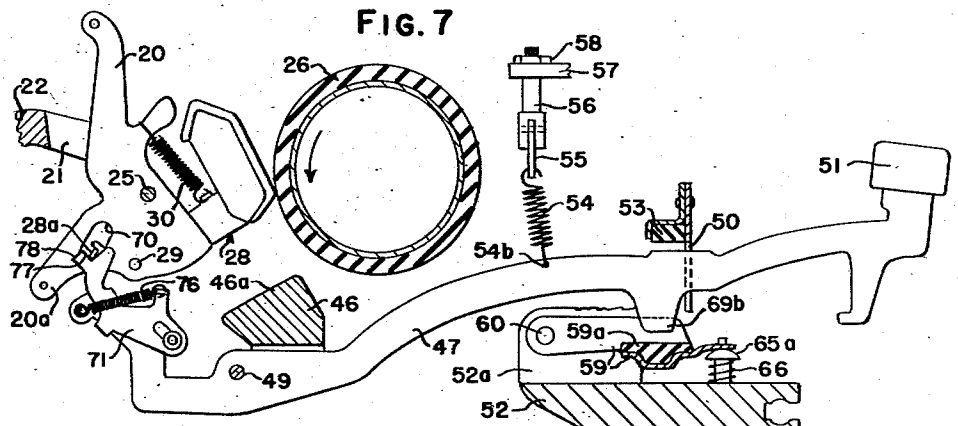

FIG. 8

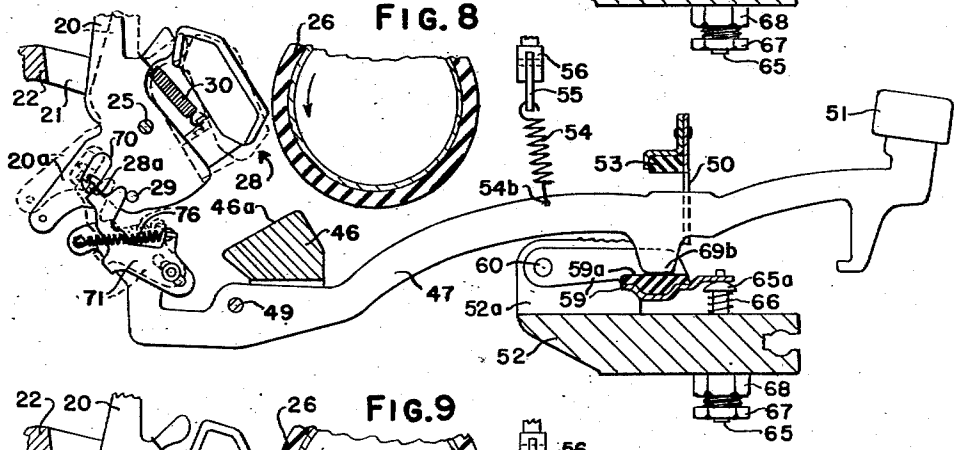

FIG. 9

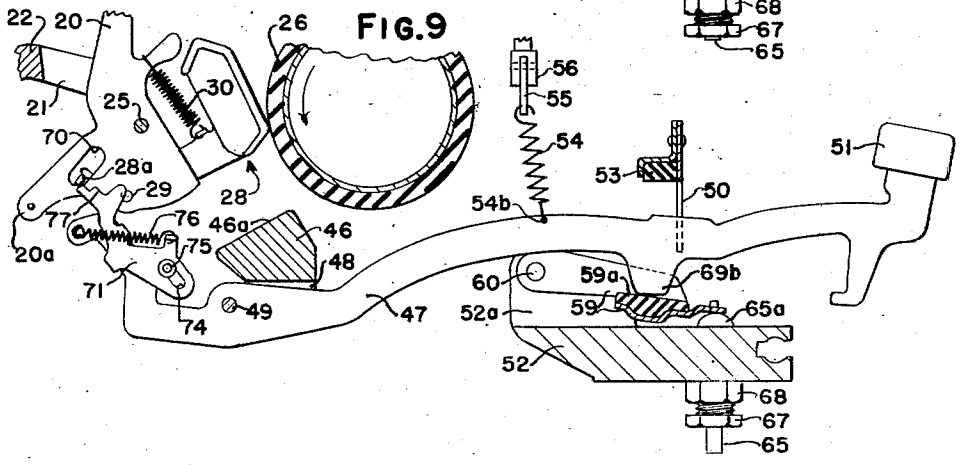

CHARLES H. KENNEDY JR.
INVENTOR

BY Theodore E. Simonton
ATTORNEY

July 9, 1957 C. H. KENNEDY, JR 2,798,584

POWER ACTUATED TYPING MECHANISMS FOR BUSINESS MACHINES

Filed July 8, 1955 5 Sheets-Sheet 5

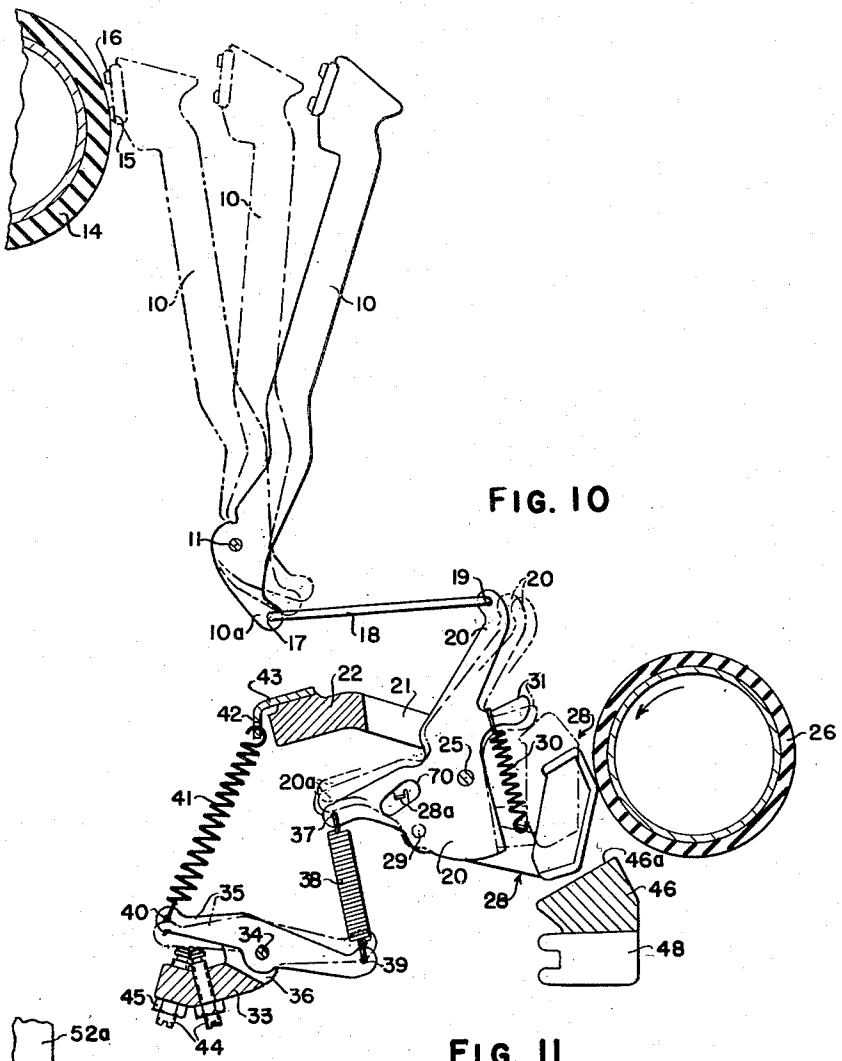

FIG. 10

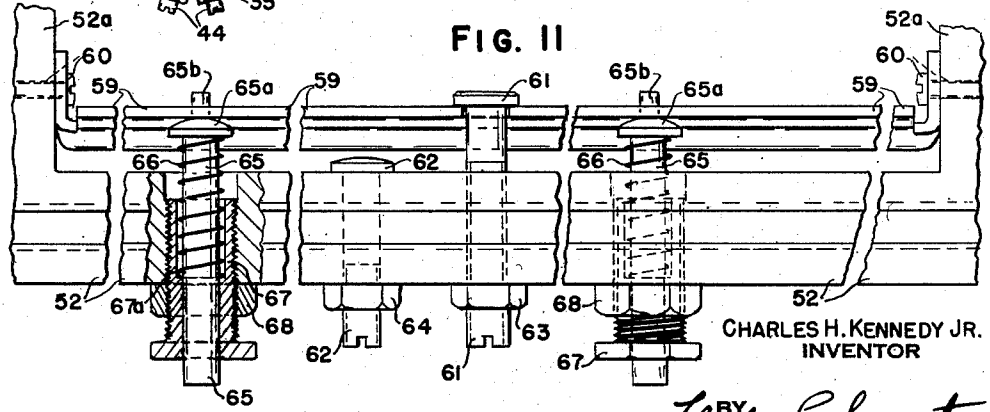

FIG. 11

CHARLES H. KENNEDY JR.
INVENTOR

BY Theodore L. Simonton
ATTORNEY

United States Patent Office 2,798,584 Patented July 9, 1957

2,798,584

POWER ACTUATED TYPING MECHANISMS FOR BUSINESS MACHINES

Charles H. Kennedy, Jr., North Syracuse, N. Y., assignor to Smith-Corona Inc., Syracuse, N. Y., a corporation of New York

Application July 8, 1955, Serial No. 520,730

19 Claims. (Cl. 197—17)

The invention relates to improvements in power actuated typing mechanism for business machines and, more particularly, to improvements in typing mechanism of the kind in which the type bars of a set of type bars are selectively impellable by power means through printing strokes which are completed by type bar momentum.

The invention has for its principal objectives the provision in a typing mechanism of the aforesaid kind of improved individual type bar actions and an improved set of said actions by which maximum typing speed can be attained, type bar rebound from rest position is minimized, type bar collision and jamming are minimized, uniformity of type impressions is attainable, sharp and clean type impressions are attained, noise and wear and shocks are kept at a minimum, and uniform light loads are imposed on the power means by the several actions of the set of type bar actions.

Other important objectives are the provision of key operated means for initiating power operation of the type actions suitable for convenient and comfortable actuation of the keys by typists having widely variant key depressing techniques, and the provision of improved means for effecting repeat typing, if desired, by any one or all of the type bar actions.

The invention is particularly applicable to typing mechanism of the kind wherein each type bar action has pivoted thereon a driving cam engageable with a continuously rotating power roller to impart a printing impulse to the type bar. In connection with actions of this kind, further purposes of the invention are to minimize wear of the power roller and cams, to prevent slippage between the cams and roller while engaged, and to facilitate freeing of jammed type bars.

Other purposes and advantages of the invention will appear from the following description of the preferred embodiment of the invention illustrated in the accompanying drawings.

In the drawings:

Figure 1 is a fragmentary top plan view of a known style of front strike typewriter equipped with power actuated typing mechanism embodying the invention, certain parts of the typewriter being entirely omitted and others partly broken away for clarity of illustration of certain features of the invention;

Figure 2 is a fragmentary vertical sectional view taken medially of the set of type bar actions of the typewriter on the line 2—2 of Figure 1;

Figure 3 is a detail sectional view on an enlarged scale taken on the same line as Figure 2;

Figure 4 is a detail sectional view taken on the line 4—4 of Figure 3;

Figure 5 is a detail sectional view taken on the same line as Figures 2 and 3 and showing a modified form of key operable means for optionally controlling cam engagements with the power roller for non-repeat or repeat typing;

Figure 6 is a detail sectional view taken on the line 6—6 of Figure 5;

Figures 7 and 8 are detail sectional views taken on the same line as Figure 2 and showing different stages of operation of the parts;

Figure 9 is a detail sectional view similar to Figures 7 and 8 but showing the key operated means modified as in Figure 5 and the parts positioned to start a repeat drive of the type bar action;

Figure 10 is a detail sectional view taken on the same line as Figure 2 and illustrating the momentum printing operation of the type bar action; and

Figure 11 is a fragmentary front view, partly in section, of the key lever control bail means forming part of the invention.

The improved typing mechanism is shown embodied in a known style of typewriter wherein the usual set of normally cumbent and arcuately arrayed type bars **10** are pivoted on an arcuate pivot wire **11** carried by a type bar segment **12** having radial guide slots for the type bars. The segment has attached thereto by means not shown the usual arcuate type bar rest **13**, the segment and rest forming a type basket which supports the type bars for identical printing strokes of 90 degrees for type impacts at a common printing point on the usual roller platen **14**.

The platen **14** is mounted on the usual carriage, not shown, to travel transversely of the machine. The type basket is rearwardly tilted for type impacts on the upper front portion of the platen and is downwardly and forwardly case shiftable by means not shown to condition the machine for upper case typing, each type bar carrying a lower case type **15** and an upper case type **16**. Only one medial and one side or end type bar of the set are shown, the two medial bars of the set being pivoted as usual slightly at opposite sides of the lowest point of the arcuate pivot wire **11**.

In the illustrated embodiment of the invention the power actuated typing mechanism is of a kind which includes certain other known features which now will be described.

Each type bar **10** has a short extension or heel **10***a* which heels increase in length progressively from those of the two medial type bars to those of the two end or side type bars of the set and have pivotal connections **17** adjacent their outer ends with the rear ends of normally parallel and fore-and-aft extending links **18** the forward ends of which have pivotal connections **19** with the upper ends of a set of upstanding sub-levers **20**. The sub-levers are rockable in parallel fore-and-aft guide slots **21** in a fulcrum bar **22** which extends transversely of the typewriter below the type basket and is secured at its ends at **23** to upstanding side plates **24** of the main frame of the typewriter, said bar carrying a straight and horizontal fulcrum rod **25** on which the sub-levers are pivoted.

Links **18** are all of the same length, and the upper arms of the sub-levers progressively increase in length from that of said arms of the two medial sub-levers to that of said arms of the two end or side sub-levers in accordance with a known system which, in connection with the varying lengths of the type bar heels, affords uniform leverages of the sub-levers on the type bars and equal angles of movement of the type bars from rest to printing position in response to equal angles of movement of the sub-levers, the link pivots **17** normally all lying in one, and the link pivots **19** in another, of two parallel planes which are inclined rearwardly relatively to the plane containing the pivot wire **11**.

A cylindrical power roller **26** extends across the main frame of the typewriter in front of the set of sub-levers and parallel to the fulcrum rod **25**, said roller being partly overhung by the type basket and having journals **27** in the main frame side plates **24**. The axis of roller **26** preferably is approximately at the same horizontal level as fulcrum rod **25**, and the roller is formed with a cylindrical covering of resilient rubber or other suitable material hav-

ing good friction drive characteristics. The power roller is continuously rotated in a counter-clockwise direction, as viewed in Figure 2, by suitable electric motor drive means while the machine is in use, said drive means not being illustrated since it may be of any conventional type, preferably one having typist controlled means for varying the rate of revolution of the power roller.

Each sub-lever **20** has pivoted thereto a different one of a set of coupling or driving devices in the form of cams **28** individually actuative into roll-free engagement with the power roller to impel the respective type bars to print. While they are of a type known in general, the cams and their normal arrangement with respect to the power roller and sub-levers have certain novel features in association with the aforesaid arrangement of type bars, sub-levers and connecting links which now will be described.

The cams are of identical size and shape and have serrated short tread portions T of fixed and invariable eccentricity to the pivotal axes of the cams. The cam pivots **29** connect the cams to the sub-levers at identical points on the sub-levers identically related to the fulcrum rod **25** for the sub-levers, the pivots **29** normally being axially aligned across the machine and supporting the cams to rock about axes parallel to those of the sub-levers and power roller. The pivotal axes of the cams normally are below and preferably slightly to the rear of the fulcrum axis of the sub-levers and are much closer to the sub-lever fulcrum axis than the upper ends of the shortest sub-levers. Light springs **30** bias the cams to identical roller-clearing rest relations to the sub-levers, springs **30** being connected to the cams and to stop lugs **31** on the sub-levers which are normally abutted by stop portions **32** on the cams.

The cams normally extend forwardly and upwardly from pivots **29** at the rear of the power roller with their tread portions T facing toward the power roller. Tread portions T of the cams rapidly and progressively increase in eccentricity to the cam pivots from the lower ends L to the upper ends U of said tread portions, ends L being normally equi-distant from the periphery of the power roller and equi-distant above a plane containing the power roller axis and the cam pivots in the rest position of the type bars for initial rolling engagements of the lower ends L of the cam treads with the power roller along a common horizontal line along the power roller periphery slightly above said plane. The length of tread portions T is such that the upper ends U thereof roll free of the power roller before the type bars reach the platen, the length being such, in the construction shown, that the cams roll free of the power roller upon swinging of the type bars through approximately 65 degrees of the 90 degree printing strokes of the type bars.

Preferably the sub-levers **20** are of sheet metal and the cams **28** have sheet metal body portions M pivoted to and held abutting flatwise the pendent and segmental flat lower arms or portions of the sub-levers by the pivots **29**, the tread portions T of the cams and the abutments **32** of the cams being formed on portions N of the cams which are immovably fixed on cam portions M and, preferably, are formed of nylon or other suitable rigid plastic material.

By reason of the aforesaid construction and arrangement of type bars, links, cams and power roller all of the sub-levers are rockable through identical angles at identical accelerating rates with identical effective force and the type bars are rockable by the sub-levers through identical greater angles and at identical greater rates of acceleration than the sub-levers on complete printing strokes of the type bars. All type bars consequently start the final momentum portion of their printing strokes while moving at the same speed and all move by momentum through the same angle, said angle being approximately 25 degrees in the construction shown.

Associated with each of the above described power driven type bar actions of the set of actions is a different one of a set of novel and identical type bar action controlling and returning means of simple construction whereby, as hereinafter pointed out, many of the beforementioned purposes of the invention are attained. Said controlling and returning means, as embodied in the preferred form of the invention shown in the drawings, now will be described.

A straight fulcrum bar **33** for a set of control levers extends horizontally across the typewriter below and rearwardly of the sub-lever fulcrum bar **22** and is fixed at its ends to main frame side plates **24**. Adjacent its forward edge the bar **33** carries a straight and horizontal fulcrum rod **34** which is parallel to the sub-lever fulcrum rod **25** and supports a set of individually rockable identical and parallel control levers **35** which are guided in slots **36** in the forward edge of the bar **33**, the control levers being pivoted midway between their ends on rod **34** and normally being in register across the machine in a rearwardly inclined plane normal to a forwardly inclined plane which contains the fulcrum rods **25** and **34**. Each sub-lever **20** is formed with an arm **20***a* which is radial to its axis and which normally extends rearwardly and downwardly toward the control lever fulcrum rod **34** and is pivotally connected at **37** with the upper end of a different one of a set of identical elastically extensible links **38** in the form of very stiff helical springs which normally are not under tension or stretched, the lower end of each spring link being pivotally connected at **39** with the forward end of the associated one of the control levers **35**. Each control lever **35** has its rear end connected at **40** with the lower end of a different one of a set of identical type bar action return springs **41** the upper ends of which are attached at **42** to a straight horizontal anchor bar **43** which extends across the typewriter and is fixed to the rear portion of the sub-lever fulcrum bar **22**.

Springs **41** are much lighter or weaker springs than the spring links **38** and normally are under light tension or slightly stretched and normally also extend rearwardly and downwardly from their connections **42** with anchor bar **43** to their connections **40** with the normally upwardly and rearwardly extending rear arms of the control levers **35** at like somewhat obtuse angles to said control lever arms such that, if the control levers were unobstructed throughout the printing and return strokes of the type bars, connections **40** would move through arcs the chords of which would be coincident with the axial lines of springs **41** in the rest positions of the type bar actions, whereby springs **41** will stretch as nearly as possible along their normal axial lines on printing strokes of the type bars.

Spring links **38** normally extend downward and rearward from their connections **37** with sub-lever arms **20***a* to the connections **39** with the forward arms of control levers **35** at a very obtuse angle to arms **20***a* of the sub-levers and at an acute angle to the forward arms of the sub-levers, and the connections **37** normally are at least substantially in the plane containing the sub-lever and control lever fulcrum rods.

Preferably, and as shown, the lengths of springs **38** and **41** in the rest positions of the type actions are at least substantially equal to each other and to the also at least substantially equal distances between the control lever fulcrum rod **34** and connections **39** and **40** and between connections **37** and the sub-lever fulcrum rod **25** respectively, with connections **37** at least substantially midway between the fulcrum rods **25** and **34**.

Adjustable stop screws **44**, one for each control lever **35**, are threaded through the control lever fulcrum bar **33** behind the control lever fulcrum rod **34** in the paths of rearward and downward movement of the rear arms of the respective control levers. Said screws preferably have dome-like heads or upper ends engageable by said control lever arms and also have slotted lower ends whereby the screws may be variably screwed up and down with the aid of a screw driver. Each screw pref-

erably has threaded thereon below and against the bar 33 a lock nut 45 for holding the screw in adjusted position. Desirably the screws are arranged in two straight rows across the machine with the screws in one row staggered transversely of the typewriter relatively to those in the other row.

While the stop screws 44 may be downwardly adjusted far enough to prevent arrest by the screws of the control levers on printing strokes of the type bars and said screws may be upwardly adjusted far enough to arrest the control levers on printing strokes of the type bars prior to the cams rolling free of the power roller, it is preferred to adjust all of the screws to arrest the control levers on the printing strokes of the type bars before completion of said strokes and at, or after, the point in said type bar strokes (65 degrees) at which the cams roll free of the power roller and the bars start the momentum period of their printing strokes. The preferred maximum upward adjustment of any one of the screws is one which will arrest the associated control lever at the beginning of the momentum period of type bar printing strokes and the preferred maximum downward adjustment of any one of the screws is one which will arrest the associated control lever at a point in the type bar printing strokes at which the type bar has moved through approximately 81 degrees and must move through approximately 9 degrees to complete the printing stroke.

By varying individually the adjustments of the respective screws 44, and especially to points between the above mentioned preferred limits of adjustment, each type bar action may be selectively buffered as required to attain uniform type impressions by all type bars of the set of bars notwithstanding such factors as variations in sizes of type faces from bar to bar and varying amounts of friction in the respective type actions. How this and other ends of the invention are attained through the type bar action controlling and returning means now will be described briefly with particular reference to Figures 2, 3 and 10, it being assumed that initial driving engagement of the cam with power roller has been first effected as shown in Figure 7.

The cam as it is rolled by the power roller to its point of roll-free disengagement from the power roller shown in Figure 10 rocks the sub-lever 20 through an angle of approximately 29 degrees at a rapid rate of acceleration to the position shown in full lines in Figure 10 and the sub-lever and link swing the type bar at a much greater rate of acceleration through an angle of approximately 65 degrees to the position shown in full lines in Figure 10. Thereafter the type bar swings through an additional angle of approximately 25 degrees by momentum to print and the sub-lever swings through an additional angle of approximately 7 degrees. Immediately upon beginning its momentum period of movement the type bar starts to drive the link and sub-lever and thereby causes the cam to break contact with the power roller, whereupon the cam will be snapped back by its restoring spring 30 to the roller-clearing rest relation of the cam to the sub-lever as indicated in dot and dash lines in Figure 10.

On a printing stroke of its connected type bar the sub-lever will drive the connected control lever continuously through spring link 38 and thereby continuously stretch the light return spring 41 until or unless driving of the control lever is arrested by its associated stop strew 44, the spring link being stiff or strong enough to do this without any stretching of the spring link and preferably being considerably stronger than is so required. In Figures 3 and 10 the stop screw for the control lever of the illustrated type action is shown adjusted to arrest the control lever at the point indicated in dot and dash lines about midway of the momentum part of the bar stroke, the parts being shown in Figure 10 in full lines as positioned at the beginning of the momentum period of the type bar stroke. In Figure 10 the positions of the parts at the end of the type bar stroke and at the point of arrest of the control lever also are indicated in dot and dash lines. Upon arrest of the control lever the type bar continues to drive the sub-lever until the bar prints thereby stretching the stiff spring link 38 to yieldingly buffer the type bar and reduce the force of type impact on the platen.

It will be noted that during the momentum period of the type bar stroke the spring link 38 will be positioned either at or very close to a right angle to arm 20*a* of the sub-lever which moves through a very small angle during this period. Accordingly the spring link is most favorably positioned for cushioning the type bar strokes during this period and for affording required wide variations of cushioning or buffering through varying adjustments of the stop screw for the control lever notwithstanding the small angular movement of arm 20*a* during the momentum period of the type bar stroke.

It further will be noted that throughout cam engagement with the power roller the control lever is rocked through a speed increasing and power decreasing driving connection (spring link 38 and sub-lever arm 20*a*) whereby the load imposed on the power roller by the control means at the start of a type bar stroke is very light and the light or weak and normally very slightly stretched return spring 41 is rapidly and very considerably stretched at a rapidly accelerating rate before the cam rolls free of the power roller. The rapidly accelerated build up in tension of the return spring builds up back pressure to hold the cam pressed to the power roller against slippage or release and counterbalances the tendency of the rapidly accelerating type bar to relieve pressure of the cam against the power roller. The larger angular movement of the control lever relatively to that of the sub-lever not only greatly stretches the return spring for quick return of the type bar but also facilitates adjustments of the stop screws relatively to each other required to effect widely different degrees of buffering of the respective type bar actions required to effect uniformly dense type impressions.

Rapid return of the type bar to rest position is increased further by the extended spring link 38, which, immediately upon type impact, contracts to its normal length to very forcibly and rapidly retract the type bar from the platen whereupon the extended return spring quickly completes return of the type bar into engagement with the type bar rest 13. The rapid cycling of the type bar from rest to printing position and back again greatly increases the speed at which a typist may type and minimizes liability of type bar collision. The controlling means not only decreases the elapsed time required for a complete return stroke of the type bar but has a remarkable capacity to minimize rebound of the type bar from the rest upon return of the type bar. Excessive type bar rebound has long been an objectionable feature of power type actions since it frequently causes type bar collision and jamming, and also causes complete or partial failure of the power drive to function upon rapid successive depressions of a key.

The resilient buffering and quick initial retraction of the type bar also are conducive to clear and sharp type impressions and to reduction of the type impact noise. The pulling of the control lever into contact with its stop screw by the stiff spring link arrests the control lever with a minimum of noise and shock.

The novel key operated means for initiating power operations of the type bar actions selectively and for attaining certain others of the stated purposes of the invention now will be described with reference to said means as embodied in the preferred form of the invention shown in the drawings.

A key lever fulcrum bar 46 extends horizontally across the typewriter below the rear portion of the power roller and the forward portions of the cams and is fixedly se-

cured at its ends to the main frame side plates **24**. A set of fore and aft extending key levers **47** are guided in fore and aft extending parallel guide slots **48** extending across the lower portion of the fulcrum bar and are rockable about a common and straight horizontal fulcrum rod **49** carried by said portion of the fulcrum bar adjacent the rear edge of the bar, said rod **49** being parallel to the sub-lever fulcrum rod **25** and located downwardly and forwardly of rod **25** and downwardly and rearwardly of the power roller.

Each key lever has a key-carrying arm which extends forwardly from the key lever fulcrum under the power roller and through a vertical guide slot in a key lever guide comb **50** to a different one of a set of type keys **51** arranged as usual in the art in four stepped and fore-and-aft spaced rows or banks in the forward portion of the main frame. Extending horizontally across the typewriter below the guide comb **50** is a bar **52** having upstanding end portions **52***a* to which the guide comb is fixedly attached, said bar being in turn fixedly attached to the main frame side plates. Said comb has fixedly attached thereto a key-lever return stop **53** which extends horizontally across the machine over the key-carrying arms of the set of key levers and which preferably includes a key lever contact pad of Vinylite, rubber or other suitable sound-deadening material.

Manual depression of each key initiates, through means hereinafter described, a roll-free engagement of a different one of the cams **28** with the power roller **26**. Each key lever has its key carrying arm normally yieldingly held rocked upwardly against stop **53** by a different one of a set of identical and preferably light return springs **54** which normally are under like slight tension. The effective lengths of the key levers progressively decrease from that of the key levers whose keys are located in the first bank of keys to that of the key levers whose keys are located in the fourth bank of keys. For like effective action of the springs **54** on the key levers their upper ends are anchored along a horizontal line to a straight spring anchor bar **55** which is disposed horizontally across the machine above the key carrying arms of the key levers between the power roller and the keyboard, and the lower ends of the springs for the first, second, third and fourth bank key levers are connected to said levers respectively at points **54***a*, **54***b*, **54***c* and **54***d* arranged on a cylindrical locus about the anchored upper ends of the springs, as shown in Figure 2. In order that the resistance of the springs to key depression may be collectively varied, if desired, the anchor bar **55** is fixed to the lower ends of bolts **56** passing slidably through parts of a transverse casting or bar **57** which is fixed at its ends to the main frame side plates, the upper ends of the bolts being threaded and having adjusting nuts **58** screwed downward thereon into contact with said casting **57**.

A key lever control bail **59** has its side arms pivoted at their rear ends at **60** to end portions **52***a* of bar **52** and has its cross-bar extending horizontally across the machine under the key carrying arms of the set of key levers, said cross-bar preferably having secured to its upper side a sound deadening pad **59***a* which has a flat upper side or face and is formed of Vinylite or other suitable material. Upward swinging of the bail is positively arrested by the head of a vertically adjustable stop screw **61** and downward swinging of the bail is positively arrested by the head of a vertically adjustable stop screw **62**, which two screws are threaded downwardly through bar **52** about midway between the sides of the machine with the shank of screw **61** passing through a slot in the bail cross-bar and the head of screw **62** located under the bail cross-bar. Lock nuts **63** and **64** on screws **61** and **62** respectively are screwable upwardly on the screws against bar **52** to lock the screws in adjusted position.

The bail is normally yieldingly held rocked upward to the limit permitted by stop screw **61** by two vertically slidable spring-urged plungers **65**, one located at each side of the two stop screws with heads **65***a* of said plungers engaged under the bail cross-bar equidistant from the ends of said cross-bar. The plungers extend through helical compression springs **66** and also through vertically adjustable sleeves **67** which are threadable variably up and down through bar **52**. Adjacent their lower ends the plungers are slidably guided in axial bores of sleeves **67** and the plungers preferably have reduced vertical guide extensions **65***b* above their heads **65***a* which project through apertures in the cross-bar of the bail. The upper ends of springs **66** are seated under the plunger heads and their lower ends are seated on shoulders **67***a* formed in the sleeves at the lower ends of enlarged upper portions of the axial bores of the sleeves, said springs normally being compressed somewhat. By screwing the sleeves **67** up and down the normal compression of springs **66** may be varied as desired. The springs **66** are larger and stiffer springs than the key lever return springs **54** so as to afford a readily perceptible greater resistance to key depression than springs **54**, the bail being depressible by the key carrying arms of the key levers as hereinafter described. Lock nuts **68** are threaded on the sleeves **67** into contact with bar **52** to hold the sleeves in desired adjusted position for affording the desired spring resistance to depression of the bail by the key carrying arms of the key levers.

Since the bail is depressible by the key-carrying arms of the key levers it will be obvious that the bail and its adjustable depression limiting stop screw **62** also function as adjustable means to positively limit key depression. Each key lever has its key carrying arm formed with a depending lug or projection engageable with the flat upper face of the bail cross-bar pad **59***a* for depression of the bail on down strokes of the keys to limits determined by the bail and its stop screw **62**, said lugs and their locations on the key levers being indentical for all key levers whose keys are in the same bank. The lugs vary, as shown, from those on the first bank key levers to those on the rear bank key levers so that all of the key levers are rockable through at least substantially identical angles from rest position up to the point of positive arrest of depression of the bail and act on the bail with at least substantially identical leverages, the key levers of the first through the fourth banks having respectively lugs **69***a*, **69***b*, **69***c* and **69***d* whose lower bail-pad-contacting ends are arranged as shown to accomplish these ends and to make initial contact with said bail pad at identical proportional points of the down strokes of the keys.

In the drawings, the bail depression stop **62** is shown adjusted downward as far as possible with its head contacting bar **52**, and the bail return stop **61** is shown adjusted at a preferred position for most typists at which the upper face of the bail pad normally is in a horizontal plane and is so spaced from the key lever lugs that said lugs contact said pad face when each key is depressed to a point midway of its possible down stroke, it being understood of course that the possible down strokes of the keys progressively increase slightly from those of the rear bank keys to those of the front bank keys. The drawings illustrate a typewriter in which the aforesaid maximum possible key dip varies approximately from $\frac{5}{16}$ of an inch for the rear bank keys to $\frac{7}{16}$ of an inch for the front bank keys so that the dip variation between immediately adjacent key banks is very slight. The at least substantially identical angular key lever movement is advantageous in initiating power driven printing strokes of the type bars, such initiation being effected in the illustrated embodiment of the invention by improved means now to be described.

Each key lever **47** has a short rear arm, said key lever arms being identical and each being located below a different one of the sub-levers **20**. The identical maximum angles of key lever movement heretofore mentioned are such that the rear key lever arms are out of the paths of movement of the sub-levers and cams at all times.

Each cam has its sheet metal body part extended rearward beyond the cam pivot and provided at its rear end with a lug **28***a* projecting laterally through a clearance slot **70** in the sub-lever to which the cam is pivoted. Said lug protrudes beyond the opposite face of the sub-lever from that at which the cam is pivoted, and a cam controlling trigger is coactive with the protruding portion of the lug, the rear arm of each of the key levers having one such trigger mounted thereon.

Two alternatively usable forms of triggers are shown which are identically mountable on the rear arms of the key levers and are identical except for one feature of that form of trigger shown in Figures 5 and 9. While triggers of the same one of these forms may be provided on all of the key levers, it is preferred to provide the form of trigger shown in Figures 5 and 9 only for use with any type bar action or actions with which it may be desired to obtain repeat typing and to provide the other form of trigger for use with the remaining actions. The trigger shown in Figures 5 and 9 will hereinafter be referred to as the optional non-repeat and repeat trigger and the other form of trigger as the non-repeat trigger. The non-repeat trigger has a straight rear end edge and the optional non-repeat and repeat trigger has a stepped rear end edge. Since the two triggers are otherwise identical a single description with the same reference numerals except for their rear end edges will suffice for both forms.

Each trigger **71** is formed of sheet metal and is held flatwise against one side face of the rear arm of the key lever on which the trigger is mounted for limited longitudinal sliding movements fore and aft of the machine, the trigger being slidably supported on said key lever arm by guide lugs **72** and **73** engaging parallel straight portions of the uppermost and lowermost edges of said key lever arm and by a longitudinal closed slot **74** in the trigger in which is engaged the shank of a headed guide stud **75** fixed on the key lever arm to limit sliding of the trigger. A spring **76** weaker than cam return spring **30** is connected to the rear key lever arm and the trigger to normally hold the trigger yieldingly projected to its rearmost limit of sliding movement. The rear portion of the trigger has a straight terminal uppermost longitudinal edge portion **77** which normally directly underlies the cam lug **28***a* at the opposite face of the sub-lever from that at which the cam is located and which edge portion of the trigger operates upon a small angle of rocking of the key lever from normal position (preferably approximately one-fourth of the maximum angle of rocking of the key lever, as shown for example in Figure 7) to rock the cam about its pivot relatively to the sub-lever into initial engagement with the power roller. As soon as the cam engages the power roller the cam and the sub-lever to which is pivoted are power driven to impel a type bar to print and to instantly carry the cam lug **28***a* out of the path of the trigger edge **77** so that rocking of the key lever by key depression may continue.

The only difference between the two forms of triggers is that the non-repeat trigger has a rear end edge **78** substantially normal to edge **77** and extending from edge **77** to the lowermost edge of the rear portion of the trigger while the optional non-repeat and repeat trigger has a stepped rear end edge equally divided between an upper end edge portion **78***a* located identically on the trigger with the upper half of end edge **78** of the non-repeat trigger, and a lower end edge portion **78***b* stepped farther rearward than the lower half of end edge **78** of the non-repeat trigger and of the same depth as end edge portion **78***a*. The rear arms of the key levers never overlap the edges **77** and **78** or **77**, **78***a* and **78***b* of the triggers in any position of the triggers. Desirably each trigger has a portion thereof such as **71***a* to the rear of its sliding connections with the rear key lever arm which closely overlaps or lightly engages at all times the adjacent face of the sub-lever whose driving cam is controlled by the trigger to preclude any possibility of the trigger becoming engaged under the sub-lever.

The length of end edge **78** and the combined lengths of end edge portions **78***a* and **78***b* are such that, even if any key lever is rocked by key depression to its maximum limit and there held, the cam lug will strike the end edge of the trigger before a return of the type bar action to rest position. In the case of an action having a non-repeat trigger, the cam lug will strike end edge **78** as shown in dotted lines in Figure 8 and drive the trigger forwardly until the type bar action is fully returned with its cam remaining in roller-clearing rest relation to the sub-lever due to cam spring **30** being stronger than trigger spring **76**. In the case of an action having an optional non-repeat and repeat trigger, a like action of the cam lug on the trigger end portion **78***a* will occur if the key lever is rocked by key depression not more than one-half of its maximum limit and there held, but if the lever is rocked farther (or to its maximum limit as shown in Figure 9) and there held, repeated operations of the type bar action will occur since the cam lug will strike trigger end portion **78***b* on each return of the type bar action and drive the trigger forwardly and the length of slot **74** is such that stud **75** will arrest forward movement of the trigger before the type bar action fully returns, whereupon the arrested trigger and final return movement of the type bar action sub-lever will rock the cam on its pivot **29** against the resistance of spring **30** into driving engagement with the power roller to initiate another power drive of the type bar action as shown in Figure 9.

Novel means whereby a typist may free jammed type bars now will be described. The upper portion of the key lever fulcrum bar **46** is formed with a flat face **46***a* which lies in a downwardly and rearwardly inclined plane with its higher forward portion underlying the rearmost portion of the power roller. Face **46***a* is so located that it will not quite be engaged by the cams **28** in normal operations of the type bar actions as will appear from Figure 10 wherein a cam is shown in full lines at the normal limit of its downward rocking by the power roller, at which limit the momentum of the type bar pulls the cam rearward away from the roller and the cam is restored by its spring to rest relation to the sub-lever, as shown in dotted lines in Figure 10, without making contact with face **46***a*.

Upon jamming of two or more type bars with the driving cam for one or more of said type bars engaged with the power roller, the engaged cam or cams will continue to be driven downward until arrested by the engagement with face **46***a* of the lower end of the tread bearing portion of the cam or cams, which engagement will occur upon any cam being driven downward a slight distance beyond its normal limit of driven movement by the power roller. Jammed type bars and their driving cams may be released by pushing the type bars toward the platen seriatim in the order of their closeness to the platen to permit springs **30** to swing the cams into rest relation to the sub-levers on which they are pivoted, or by first shutting off the power drive of the power roller, then pulling the jammed type bars away from the platen to force their driving cams forward across the inclined face **46***a* and upward about their pivots during which the cams will reversely rotate the power roller, and finally moving the type bars slightly toward the platen to permit the springs **30** to restore the cams to rest relation to the sub-levers.

The key depression control bail with the associated means for adjusting the normal spring pressure on the bail, adjusting the normal position of the bail and limiting depression of the bail are highly advantageous. A cushioned down stop is afforded for all of the type keys which relieves the typist from the tiring and bruising effects on the finger tips due to arrest of key depression by the usual positive stop with no resistance to key de-

pression other than that afforded by the usual light or weak key return springs. Typists with heavy touch and follow-through touch can soon be accustomed to using the light and short finger strokes with which power typewriters should be operated for least fatigue and highest typing speed since they will soon realize that hard and extended key depression means unnecessary effort and will more or less unconsciously shorten and lighten the key depression finger strokes. Whether the typist uses heavy or light touch the sudden but yielding resistance of the bail to key depression signals to the typist that all has been done that is necessary to initiate a printing action. All type keys may be depressed to the maximum limit determined by a common stop means, and any one or more keys can be adapted for optional non-repeat and repeat actions merely by changing the key-lever-carried trigger no matter at what point or points in the keyboard said keys may be located, no differently located depression limiting stop being required for such keys.

It also will be noted that, when any key is depressed far enough to depress the bail, the bail will act as a repulser to hasten restoration of the key to normal position. Since, as hereinbefore pointed out, only a minor portion of the maximum key depression is required to initiate a power printing operation of a type bar action it will be noted that the major portion of such maximum key depression always is available for key depression control by means of the bail and its associated spring and stop means.

I claim:

1. A machine of the class described having a power roller, a type action which is drivable from a rest position to print and includes a type carrier actuating lever rockable transversely of the power roller, a cam journalled on said actuating lever and at will engageable with the power roller in the rest position of the type action to always drive the type action a like extent from rest position and then roll free from the roller before the type action prints to permit the action to print by momentum, a second lever rockable transversely of the power roller, a link connecting said levers for rocking of the second lever by the type carrier actuating lever with progressively diminishing leverage and at a progressively increasing speed following engagement of the cam with the power roller, and an extensible and contractible spring connected at one end to a fixed anchor and at its other end to said second lever to be slightly extended in the rest position of the type action and be further extended by rocking of the second lever as the type action is driven from rest position.

2. A machine, as claimed in claim 1, wherein there is provided means variably adjustable to arrest rocking of said second lever at a selective point in the printing movement of the type action, and wherein the link which connects said two levers is an elastically extensible link having a greater resistance to extension than said spring.

3. A machine, as claimed in claim 2, wherein said two levers are rockable about parallel axes and are connected by the link for rocking of the second lever in a direction opposite to that of the type carrier actuating lever on a printing movement of the type action, and wherein, throughout the cam engagement with the roller, the link and a straight line through the axis of the second lever and the link connection to the second lever progressively approach a right angle relation as do also the link and a straight line through the axis of the type carrier actuating lever and the link connection thereto.

4. A machine, as claimed in claim 2, wherein said two levers and their connecting elastically extensible link are so arranged that said link extends substantially normal to a straight line passing through the link connection to the type carrier actuating lever and the axis of said lever at the time the cam rolls free from the power roller.

5. A machine of the class described having a type action which is drivable from a rest position to print and includes a type carrier actuating lever which has a fixed fulcrum axis, power means engageable to drive the actuating lever of the type action to impart a printing impulse to the type action and automatically disengageable before the type action prints, a second lever having a fixed fulcrum axis parallel to that of the type carrier actuating lever, a return spring for the type action having a fixed anchorage and an anchorage to the second lever, and a link having anchorages to said two levers for rocking of the second lever by the type carrier actuating lever in a direction to stretch said spring when the type action is given a printing impulse and for rocking of the type carrier actuating lever by the second lever in response to contraction of the spring following a complete printing action of the type action to thereby restore the type action to rest position, said link and levers being so arranged that the link folds about its anchorage to the second lever toward the fulcrum axis of the second lever during return of the type action to rest position and normally is disposed at an acute angle to a straight line connecting the fulcrum axis of the second lever and the link anchorage to that lever.

6. A machine, as claimed in claim 5, having means to arrest return spring stretching movement of the second lever before the type action prints, and wherein the link is resiliently yieldable upon arrest of the second lever by said arresting means to first resiliently buffer the printing action of the type action and thereafter react to impart a type action return speeding impulse to the type action.

7. A machine, as claimed in claim 6, wherein the anchorages of the return spring and the link to the second lever are substantially equidistant from the fulcrum axis of the second lever and at opposite sides of said axis, the anchorage of the link to the type carrier actuating lever is spaced from the fulcrum axis of that lever a distance substantially equal to the spacing of its anchorage to the second lever from the fulcrum axis of the second lever, and the link anchorage to the type carrier actuating lever normally is located substantially directly between the fulcrum axes of the two levers.

8. Power actuated typing mechanism for business machines comprising a set of type actions each power drivable from a rest position and each including a pivoted type bar and an actuating lever which are so articulated that complete printing strokes of all of the type actions of the set require rocking of the actuating levers through identical angles and rocking of the type bars through identical angles, means engageable by the type bars to determine the rest position of each type action, the type bars in the rest positions of the actions being disposed in an arcuate array and rockable to print at a common printing point, the actuating levers being rockable about a common straight fulcrum axis extending transversely of the arcuate array of type bars, a power driven member rotative about an axis parallel to the fulcrum axis of the type bar actuating levers, means to individually connect the type bar actuating levers with the power driven member to rock the connected type bar actuating lever through an angle the amplitude of which is identical for all of said actuating levers and at a speed rate which is identical for all of said levers and thereupon disconnect the connected lever from said power driven member, a set of identical and light return springs, one for each type action, each normally identically slightly stretched and each having a fixed anchorage, a set of identical and movable anchor members, one for each return spring, said anchor members being identically arranged and each movable in one direction to stretch the spring anchored thereto and movable in the opposite direction by contraction of that spring, and a set of identical and resiliently yieldable links each identically connecting a different one of the type bar actuating levers with a different one of the return spring anchor members to move the anchor members in return spring stretching direction on printing

strokes of the type actions, and individual adjustable arresting means for the respective spring anchor members for arresting return spring stretching movements of the anchor members, said links having sufficient resistance to yielding to stretch the light return springs on printing strokes of the type actions at least substantially entirely without yielding of the links until return spring stretching movements of the movable spring anchor members are arrested.

9. In a power actuated typing mechanism for business machines having a type bar rest and a set of pivoted type bars all movable away from said rest to a common printing point through printing strokes of identical amplitude, the combination of a power driven member, individual actuating means for the type bars normally disassociated from the power driven member and each associative therewith to first drive its actuative type bar at a rate and through a portion of its printing stroke which are identical for all of the type bars of the set and to thereupon become disassociated from the power driven member for completion of type bar printing strokes by momentum, a set of identical individual returning springs for the type bars each having one end connected to a fixed anchorage, identical operating connections between the other ends of the returning springs and the individual type bar actuating means for stretching the returning springs on printing strokes of the type bars and operable by contraction of the returning springs to return the type bars to their rest, each said operating connection including a spring which is stronger than the returning spring and is interposed between the returning spring and the type bar actuating means, and means individual to each of said operating connections variably adjustable to arrest stretching of the returning springs by said connections before completion of the printing strokes of the type bars and cause the type bar actuating means to stretch the stronger spring as the type bar printing strokes are completed.

10. A machine of the class described having a power driven member, a set of type actions individually operable to print at a common printing point, a return stop for all of the type actions, means for coupling the type actions individually with the power driven member for reception of a printing impulse and uncoupling them before they print, individual restoring means for the type actions each constantly connected with its associated type action to resiliently hold the action returned to said stop and resist printing impulses thereof, means individual to each type action and each variably settable to stiffen the restoring means for the associated type action during only a selected final portion of a printing movement and initial portion of a return movement of the type action, a set of key levers rockable about a common axis, a return stop for the key levers, individual springs biasing the key levers to a returned position against said key lever return stop, means underlying and common to all the key levers and depressible at least a substantially identical extent by all of the key levers by substantially identical angles of rocking of said levers away from their return stop, means individually carried by the key levers for effecting coupling of the respective type actions with the power driven member upon rocking of the key levers at least substantially through one and the same angle away from their return stop, spring means biasing said depressible means upwardly toward the key levers, means adjustable to vary the resistance of said spring means to depression of said depressible means and adjustable means for variably limiting upward movement of said depressible means by said spring means.

11. A machine, as claimed in claim 10, having means to positively limit depression of said depressible means by the key levers to a maximum possible limit which permits a considerably greater angle of rocking of the key levers away from their return stop than is necessary for effecting coupling of the type actions with the power driven member.

12. A power-driven typewriting machine having a set of type actions operable to effect imprints at a common printing point and each including a pivoted type bar, a rest normally engaged by the type bars of the set of type actions, a power-driven roller, a set of cams each journalled on a different type action for actuation into a roll-free engagement with the power roller which imparts a printing impulse to the type action on which the cam is journalled, a set of key levers, a return stop away from which said key levers are rockable, individual return springs for the key levers normally holding them against said return stop, a member underlying the key levers and depressible at least a substantially identical and fixed maximum extent by all of the key levers to positively limit rocking of the key levers away from their return stop, means on each key lever operable to cause a roll-free engagement with the power roller of a different one of the cams upon rocking of the key lever away from its return stop through a minor portion of the extent of key lever rocking movement permitted by the depressible member, spring means for resisting depression of the depressible member, and means settable to variably limit upward movement of the depressible member by its depression resisting spring means.

13. A power-driven typewriting machine, as claimed in claim 12, having spring devices individual to each type action and constantly connected thereto to normally yieldingly hold the type bar of the type action against the type bar rest and yieldingly resist printing impulses of the type action, and means individual to each of said spring devices individually settable to act on said spring devices during a variable final portion of the printing impulses of the type actions to augment the resistance of the spring devices to printing impulses of the type actions.

14. A power-driven typewriting machine, as claimed in claim 12, wherein the means on the key levers operable to cause roll-free engagements of the cams with the power-driven roller comprise a cam-actuating trigger on each lever, the trigger on one or more of said key levers being effective to cause repeated roll-free cam engagements with the power-driven roller when the key lever carrying said trigger is held rocked to or adjacent the maximum limit of rocking of the key lever away from its return stop and to cause only a single roll-free cam engagement with the power-driven roller when the key lever is held rocked a lesser extent away from its return stop, and the triggers carried by the remaining key levers being always effective to cause only a single roll-free cam engagement with the power-driven roller when those key levers are rocked and held away from the key lever return stop.

15. A power-driven typewriting machine having a type action, a continuously rotative power member, an actuator connected with the type action and engageable with the power member to thereupon execute a cycle of movement at the end of which said actuator is disengaged from the power member and during which said type action executes a complete printing and return movement respectively from and to a normal rest position, a controlling key lever for the type action which is key rockable through a fixed maximum angle from a rest position to which the lever is biased to return, an actuator engager mounted on the key lever to slide thereon in a path fixed relatively thereto and to rock with the lever transversely of the path of sliding movements of the engager on the lever, and spring means normally slidably projecting the engager to a fixed limit of its sliding movement in one direction, said engager having an edge portion extending substantially longitudinally of the path of sliding movement of the engager and operable on the actuator to engage the actuator with the power member in response to rocking of the lever through an initial portion of its fixed maximum angle of rocking movement from rest position, and said engager further having an edge portion extending transversely of the path of

sliding movement of the engager and abuttive by the actuator during the final portion of its cyclic movement, if the key lever is held rocked from rest position to, or beyond the extent necessary to effect engagement of the actuator with the power member, to slidably drive the engager against the resistance of its projecting spring far enough to permit the actuator to complete its cyclic movement without re-engagement of actuator with the power member.

16. A power-driven typewriting machine, as claimed in claim 15, wherein the second mentioned edge portion of the actuator engager is divided into two approximately equal portions so stepped relatively to each other longitudinally of the path of sliding movement of the engager that, depending upon the extent the key lever is rocked from rest position, one or the other of said stepped edge portions of the engager is engageable by the actuator during the final portion of return movement of the type action to slidably drive the engager if the key lever is held in rocked position, and wherein means are provided for so positively limiting slidable driving of the engager by the actuator when the key lever is held rocked that driving action of the actuator on one of said relatively stepped edge portions of the engager will effect a re-engagement of the actuator with the power member as the type action completes its return to rest position while driving action of the actuator on the other one of said stepped edge portions will not effect re-engagement of the actuator with the power member.

17. A power-driven typewriting machine, as claimed in claim 16, wherein means are provided which require a substantially greater force application to the key lever to present the last-mentioned one of said two relatively stepped edge portions of the engager for engager-driving action thereon of the actuator, and wherein a greater rocking movement of the key lever from rest position is required to present said last-mentioned one of said relatively stepped edge portions for driving action thereon of the actuator than is required to present the other one of said stepped edge portions for driving action thereon of the actuator.

18. A power-driven typewriting machine having a horizontally disposed power roller, type actions individually operable to print at a common printing point from which they are individually biased to return to rest position after printing, individual roll-free type action operating cams oscillatively carried by the type actions and individually biased in one direction to assume roller-clearing rest relations to the type actions from which they are movable individually in the opposite direction to initiate type action operating roll-free engagements of the cams with the power roller which start along a common horizontal line and normally end along a second common horizontal line, and stationary means common to said cams and arranged to be cleared by the cams without cam contact with said stationary means during unobstructed printing operations of the type actions and to arrest in a slightly over-rolled position the cam of any type action whose printing movement is obstructed while its operating cam is engaged with the power roller.

19. A power-driven typewriting machine, as claimed in claim 18, wherein the power roller extends transversely of the machine forwardly of the type actions and their operating cams and rolls the cams downwardly behind the power roller to operate the type actions, the cams normally end their roll-free engagements with the roller at points along said second horizontal line at least close to the horizontal level of the power roller axis, and said stationary means has a cam arresting flat face which inclines rearwardly and downwardly away from the power roller and is overhung by all of the cams while the type actions are in rest position.

References Cited in the file of this patent

UNITED STATES PATENTS

865,893	Hess	Sept. 10, 1907
1,462,913	Hess	July 24, 1923
1,781,720	Degener	Nov. 18, 1930
2,697,502	Becker	Dec. 21, 1954
2,714,948	Schremp et al.	Aug. 9, 1955