March 27, 1962 J. B. SWANEY 3,026,597

TEXTURING JET

Filed June 13, 1960

FIG. 1.

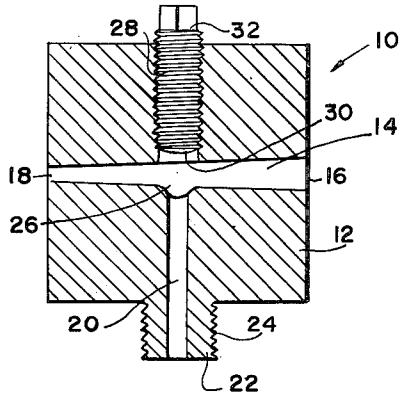

FIG. 2.

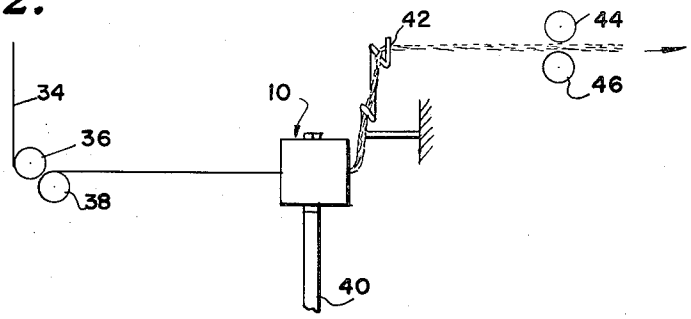

FIG. 3.

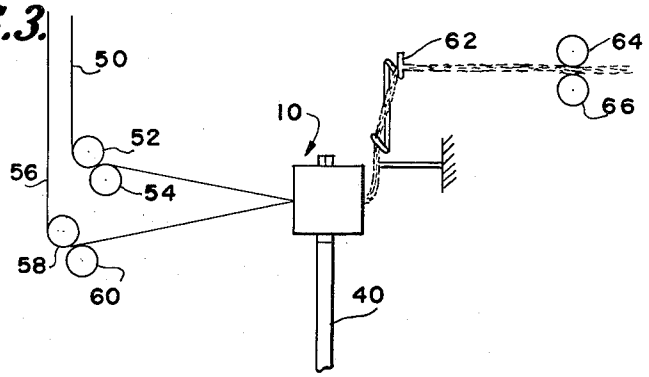

INVENTOR

JAMES B. SWANEY

BY Cushman, Darby & Cushman

ATTORNEYS

United States Patent Office 3,026,597 Patented Mar. 27, 1962

3,026,597

TEXTURING JET

James B. Swaney, Gibsonville, N.C., assignor to Burlington Industries, Inc., Greensboro, N.C., a corporation of Delaware

Filed June 13, 1960, Ser. No. 35,696
9 Claims. (Cl. 28—1)

This invention relates to the texturing or bulking of yarn, and in particular to a novel and improved texturing jet.

A principal object of the invention is to provide a simple, inexpensive texturing jet, readily manufactured from a variety of materials by conventional manufacturing methods. A related object is to provide a texturing jet of outstanding durability, inherently adapted to operate continuously over long periods, without substantial wear. The device of the present invention replaces the venturi needles commonly employed, which require extremely close tolerances in machining and are subject to considerable wear requiring frequent replacement.

An important object of the invention is to provide a texturing jet which may be controlled and adjusted with maximum ease, adapted to produce textured and intertextured yarns of superior and consistent stability. Another object of the invention is to provide a versatile jet, useful for bulking a wide variety of yarns under widely varying conditions, and particularly useful for intertexturing multiple yarns, as well as for texturing single yarns.

Further objects of the invention will be in part evident and in part pointed out hereinafter.

The invention and the novel features thereof may best be made clear from the following description, and the accompanying drawings, in which:

FIGURE 1 is a sectional elevational view of an exemplary embodiment of the present invention;

FIGURE 2 is a diagrammatic view illustrating the texturing jet of FIGURE 1 in operative relationship with other elements used in texturing yarn, and

FIGURE 3 is a diagrammatic view illustrating the texturing jet of FIGURE 1 in operative relationship with other elements used in intertexturing a plurality of yarns.

Referring to the drawings, the texturing jet indicated generally as **10** in FIGURE 1 comprises a body **12** which may be of generally cubical form. The body preferably is a metal block, although it may be constructed of glass, ceramic, plastic or the like. A straight yarn passage **14** extends through the body **12**, substantially centrally thereof, the passage being slightly tapered through its length. By way of example, the yarn passage may be one inch long, and the taper such that the outlet end **16** has substantially twice the diameter of the inlet end **18** of the yarn passage. The inlet end **18** may be .075 inch in diameter, and the passage tapered smoothly to a diameter of approximately .15 inch at its outlet end **16**.

An air passage **20** communicates with the yarn passage **14** at about the middle thereof, the air passage being substantially at a right angle with respect to the yarn passage, and extends therefrom to the exterior of the body **12**. As shown in FIGURE 1, the body may be provided with a side boss **22**, through which the air passage extends, and the boss **22** may be exteriorly threaded, as at **24**, for ready connection thereto of a conventional pressure air conduit.

The yarn passage **14**, at the entry point of the air passage **20**, is slightly enlarged to form a turbulence chamber **26**. The shape and size of the turbulence chamber are not critical, but it may be generally spherical and of diameter approximately twice the diameter of the yarn passage at this point. In line with the air passage **20**, and on the opposite side of the yarn passage, the jet body **12** is drilled and tapped, and a common adjusting screw **28** is mounted therein. The adjusting screw is provided with

a substantially flat inner end **30**, which constitutes an adjustably movable wall in the turbulence chamber **26**. The outer end **32** of the adjusting screw **28** may be formed in any conventional manner to facilitate engagement and rotatable adjustment thereof. While the adjusting screw has the advantage of extreme simplicity, other equivalent means constituting an adjustably movable wall in the turbulence chamber, opposite the air inlet, or similar means to alter the volume and configuration of the turbulence chamber, may be provided.

FIGURE 2 shows the texturing jet **10** in a conventional texturing or bulking arrangement, wherein a multifilament yarn **34** is continuously fed by feed rolls **36**, **38** to the inlet end **18** of the yarn passage of the jet. As indicated, the feed path of the yarn to the jet may be in alignment with the yarn passage. A pressure air conduit **40** is connected to the air passage of the jet, and the textured yarn emerges from the larger end of the yarn passage and is diverted laterally through a conventional tensioning device **42** to take-up rolls **44**, **46**.

As is well known, the peripheral speed of the feed rolls **36**, **38** considerably exceeds the peripheral speed of the take-up rolls **44**, **46**, whereby sufficient overfeed of the yarn is effected to compensate for the texturing or bulking which takes place in the jet **10**. The air introduced through air passage **20** preferably is at considerable pressure, for example, 20 lbs. per square inch, whereby considerable turbulence is caused in the turbulence chamber **26**. By a mechanism not completely understood, this turbulence bulks the yarn passing therethrough with exceeding uniformity, and produces a textured yarn of superior stability. The major portion of the air supplied through air passage **20** exhausts through the larger end **16** of the air passage, this movement tending to feed the yarn through the passage. A minor portion of the air entering the jet through air passage **20** exhausts through the smaller entry end **18** of the yarn passage, this air movement exerting a slight tensioning effect on the yarn entering the jet, which apparently contributes to the superior function of the device.

The degree of texturing or bulking of the yarn varies with yarn speed, air pressure, and the size of the turbulence chamber **26**. The jet is quite versatile, in that it functions in superior fashion with yarns of greatly varying character, and over an exceedingly wide range of yarn speeds and air pressures. Once desired yarn speed and air pressure have been established, for a particular yarn being processed, the only adjustment necessary over long runs is in the size of the turbulence chamber. This may be readily effected in the present invention, by adjustably displacing the movable chamber wall, as by turning the adjusting screw **28**, whereby its inner end **30** may be adjustably positioned with respect to the air passage opposite. It has been found that this simple adjustment affords close control over the degree of texturing. Once the adjusting screw **28** is properly positioned, the device may function for long periods without further adjustment. Should the need for further adjustment be indicated by variance of the textured yarn product, this can be effected quickly and readily without interrupting operation. As will be evident, indicia may be provided on the adjusting screw **28** and/or on the body **12** adjacent thereto to facilitate maintenance and duplication of optimum adjustment.

As will be understood, the simple design of the texturing jet is such as to minimize wear. Furthermore, ordinary wear which may occur in service does not materially affect the function of the device. Since air turbulence is utilized for bulking the yarn, the shape and finish of the elements defining the turbulence chamber are not critical, and minor irregularities occasioned by wear or otherwise have no detrimental effect. Furthermore, as will be readily understood, the device may

be readily and inexpensively constructed by molding or machining, there being no exacting requirements as to dimensional tolerances or surface finish.

FIGURE 3 shows the texturing jet **10** in an intertexturing arrangement, wherein a pair of yarns are fed to the jet simultaneously to produce a plied intertextured yarn of attractive appearance. As shown in the drawing, a core yarn **50** is fed to the jet by feed rolls **52, 54** and an effect yarn **56** is simultaneously fed to the jet by feed rolls **58, 60**. In this arrangement, the feed path of at least one of the yarns is slightly angulated with respect to the axis of the yarn passage. The jet is operated as previously described, and the intertextured yarn product leaving the jet passes through a conventional tensioning device **62** to the take-up rolls **64, 66**.

The core yarn, for example, may be 320 denier, 120 filament, 1.5 **Z** twist cellulose acetate yarn, and the effect yarn may be 320 denier, 120 filament, 1.5 **Z** twist cellulose acetate yarn of contrasting color. The core yarn may be fed with small overfeed and the effect yarn fed with comparatively great overfeed, to produce a yarn product of exceptional appearance. In one run, the take-up was at the rate of 27 yards per minute, and the core yarn fed at the rate of 28 yards per minute, resulting in approximately 4% overfeed of the core yarn. The effect yarn feed was at the rate of 67 yards per minute, resulting in approximately 150% overfeed of the effect yarn. The intertextured yarn product exhibited exceptionally attractive appearance, superior yarn stability, and excellent consistency or uniformity along its length.

It will thus be seen that there has been provided by this invention a structure in which the various objects hereinbefore set forth, together with many practical advantages, are successfully achieved. As various possible embodiments may be made of the mechanical features of the above invention, all without departing from the scope thereof, it is to be understood that all matter hereinbefore set forth or shown in the accompanying drawings is to be interpreted as illustrative, and not in a limiting sense.

I claim:

1. A texturing jet comprising a body having a straight tapered yarn passage extending therethrough and an air passage communicating with said yarn passage and extending in substantially normal direction therefrom, said yarn passage being enlarged at the entry point of said air passage to form a turbulence chamber, and means for adjustably altering the configuration of said turbulence chamber.

2. A texturing jet comprising a body having a straight tapered yarn passage extending therethrough and an air passage communicating with said yarn passage and extending in substantially normal direction therefrom, said yarn passage being enlarged at the entry point of said air passage to form a turbulence chamber, and an adjustably movable wall in said chamber disposed substantially opposite said air passage.

3. A texturing jet as defined in claim 2, including a pressure air conduit communicating with the outer end of said air passage.

4. A texturing jet as defined in claim 2, wherein said movable wall is the end of an adjusting screw mounted in said body.

5. A texturing jet as defined in claim 2, including means for feeding yarn to the smaller end of said yarn passage, and means for taking up the textured yarn issuing from the larger end of said yarn passage.

6. A texturing jet as defined in claim 2, including means for feeding at least two yarns to the smaller end of said yarn passage, and means for taking up the intertextured yarn issuing from the larger end of said yarn passage.

7. A texturing jet as defined in claim 2, including means for feeding at least two yarns to the smaller end of said yarn passage at different speeds, and means for taking up the intertextured yarn issuing from the larger end of said yarn passage.

8. A texturing jet comprising a body having a straight tapered yarn passage extending therethrough and an air passage communicating with said yarn passage and extending in substantially normal direction therefrom, said yarn passage being enlarged at the entry point of said air passage to form a turbulence chamber, said body also having a tapped hole in communication with said yarn passage and extending in substantially normal direction therefrom at said turbulence chamber, and an adjustable screw means mounted in said tapped hole for altering the size and configuration of said turbulence chamber.

9. A texturing jet as defined in claim 1 wherein said yarn passage is tapered throughout its length.

References Cited in the file of this patent

UNITED STATES PATENTS

2,220,024	Pool	Oct. 29, 1940
2,852,906	Breen	Sept. 23, 1958
2,884,756	Head	May 5, 1959

FOREIGN PATENTS

211,729	Australia	Oct. 24, 1957