Nov. 17, 1959 C. O. KUFFER 2,913,154

AEROSOL VALVE ASSEMBLY

Filed Nov. 7, 1955 2 Sheets-Sheet 1

Fig. 1

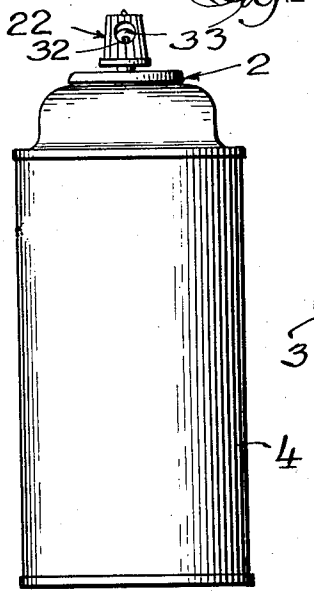

Fig. 2

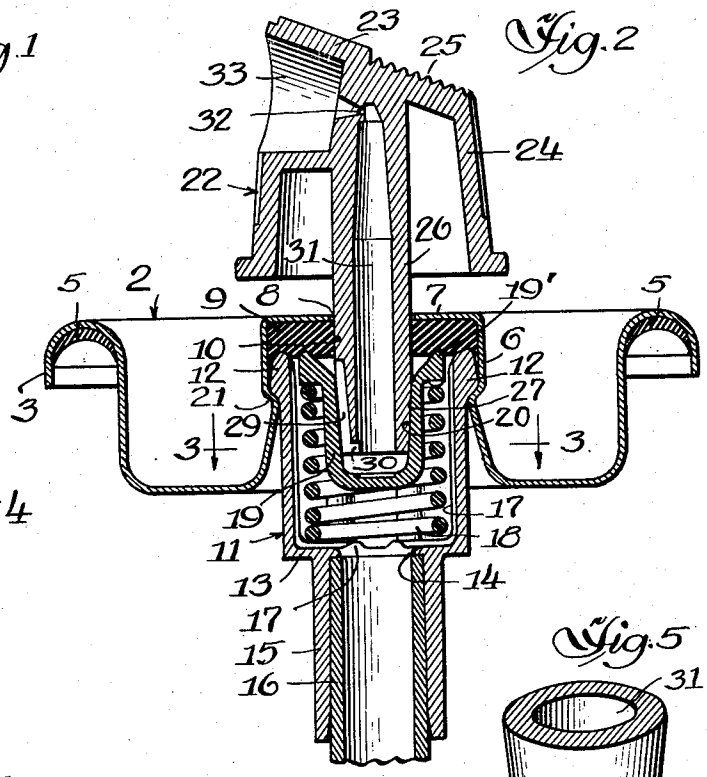

Fig. 5

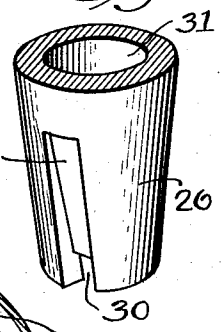

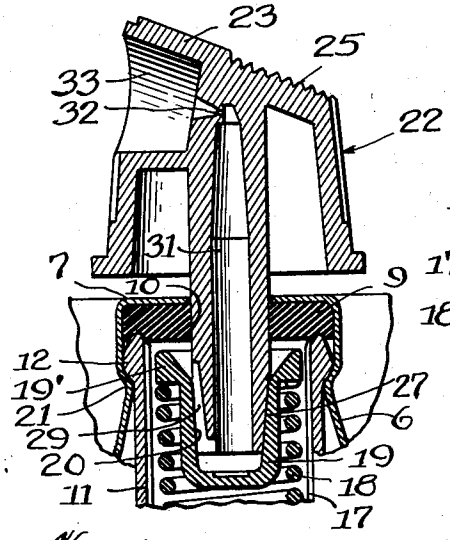

Fig. 4

Fig. 3

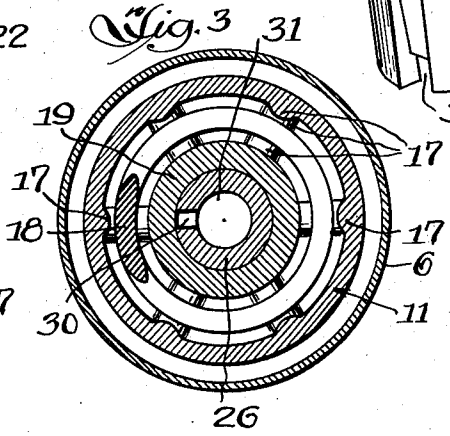

Inventor

Clarence O. Kuffer,

By: Schneider & Dressler, Attys

Nov. 17, 1959 C. O. KUFFER 2,913,154

AEROSOL VALVE ASSEMBLY

Filed Nov. 7, 1955 2 Sheets-Sheet 2

Fig. 6

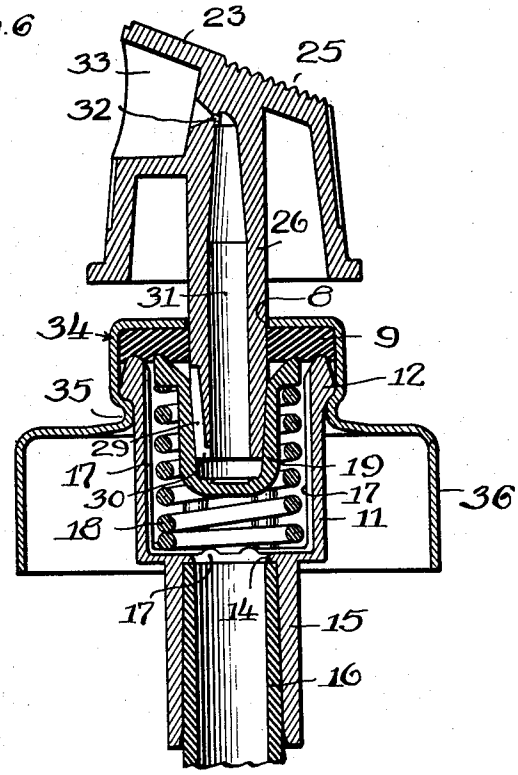

Fig. 8

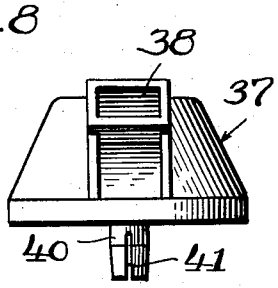

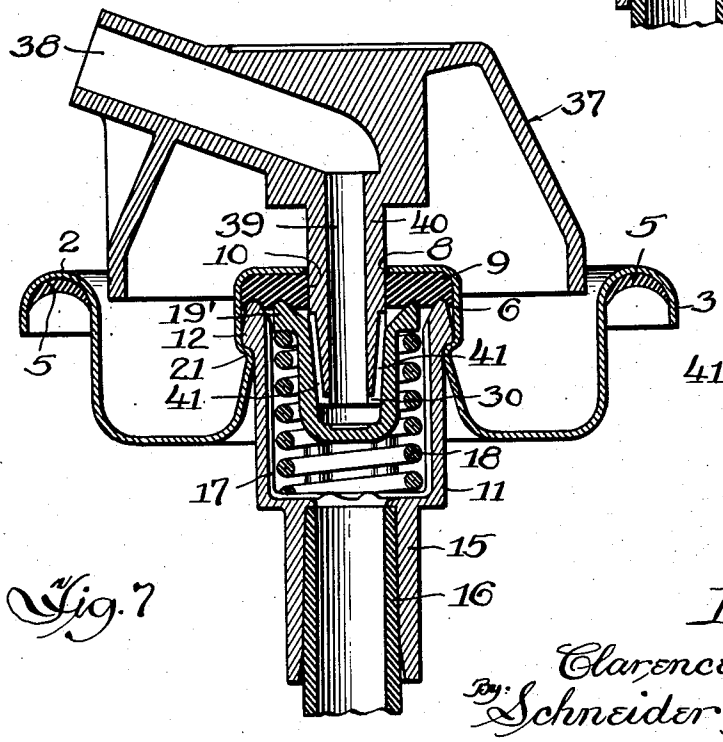

Fig. 7

Fig. 9

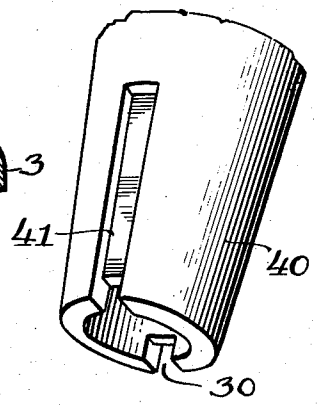

Inventor
Clarence O. Kuffer,
By: Schneider & Dressler,
Attys.

United States Patent Office

2,913,154

Patented Nov. 17, 1959

1

2,913,154

AEROSOL VALVE ASSEMBLY

Clarence O. Kuffer, Niles, Ill., assignor to Aerosol Research Company, a corporation of Illinois

Application November 7, 1955, Serial No. 545,160

9 Claims. (Cl. 222—513)

This invention relates to an aerosol valve assembly comprising a self-sealing unit adapted to control the discharge of various types of products, such as solutions, suspensions, emulsions, dry powders, and mixtures of more than one phase, from containers in the form of a spray or a foam.

The container may be filled under pressure, or may be cold filled and then pressurized. The valve assembly of the present invention may be assembled as a unit with any suitable mounting cup designed to be secured to the open end of a container such as a can, bottle, or similar receptacle. Preferably the mounting cup is formed of sheet metal and the other parts of the valve assembly are made of plastic or rubber. However, any of the parts may be made of plastic, metal, or rubber, if desired. The valve assembly includes a removable dispensing tip which may be interchanged with a similar tip to discharge the contents of the container either in the form of a spray or as foam, depending upon the nature of the product in the container.

The valve assembly of the present invention comprises a mounting cup having a sealing gasket positioned adjacent the underside of its top. The mounting cup and gasket are provided with aligned apertures through which the valve stem is inserted. A shell secured to the mounting cup with its open top engaging the underside of the gasket provides a housing for a spring pressed sealing cup also having its open top engaging the underside of the gasket. The lower end of the valve stem fits into the sealing cup. The inner wall surface of the sealing cup and the outer surface of the lower end of the valve stem are tapered to assure surface to surface contact between them when pressure is applied against the dispensing tip.

The valve stem is integral with the dispensing tip and will break the seal between the upper edge of the sealing cup and the gasket upon application of either downward or lateral pressure to the tip. The outer surface of the lower end of the valve stem is provided with one or more grooves through which the material from the container flows to reach the passageway within the valve stem when the seal between the sealing cup and the gasket is broken. The tapered surface contact between the sealing cup and the valve stem assures control of the rate of flow through the groove in the valve stem despite possible dimensional variation which may result from necessary manufacturing tolerances, or the possibility of dimensional changes which may result from physical or chemical action by the contents of the container upon the materials of construction of the component parts of the valve assembly. The cross sectional area of the grooves determines the rate of discharge from the terminal opening in the tip. It is obvious that a dispensing tip designed to discharge the contents as a foam will have grooves of greater cross sectional area than a spray dispensing tip.

The shell is provided adjacent its upper edge with a peripheral bead, and the hub of the mounting cup is

2

crimped inwardly under the bead to hold the upper end of the shell against the gasket. The shell has a tubular nipple depending from its bottom, and a siphon tube is fitted inside the nipple to provide maximum security against accidental displacement or failure of the siphon tube. The siphon tube may be omitted from containers adapted to be discharged only in an inverted position.

The structure by which the above mentioned and other advantages of the invention are attained will be described in the following specification, taken in conjunction with the accompanying drawings, showing a preferred illustrative embodiment of the invention, in which:

Figure 1 is a side elevational view of a can provided with an aerosol valve assembly embodying the invention;

Fig. 2 is a cross sectional view of a valve assembly adapted to be mounted on a can;

Fig. 3 is a cross sectional view, taken along the line 3—3 of Fig. 2;

Fig. 4 is a fragmentary cross sectional view showing the valve in dispensing position;

Fig. 5 is a fragmentary detail perspective view showing the lower end portion of the valve stem;

Fig. 6 is a cross sectional view, similar to Fig. 2, showing the mounting cup designed for use on a bottle;

Fig. 7 is a cross sectional view, similar to Fig. 2, showing a tip adapted to discharge the contents of the container as a foam;

Fig. 8 is a detail end view showing the front of the discharge end of the tip of Fig. 7; and

Fig. 9 is a fragmentary detail perspective view of the lower end portion of the valve stem of Fig. 7.

Referring to the drawings, the reference numeral **2** indicates a mounting cup having a depending peripheral flange **3** adapted to be sealed to the upper edge of an opening in the top of a can **4**. A suitable sealing composition **5** is applied to the inner surface of the mounting cup adjacent flange **3**. The specific shape of the mounting cup is not critical, since the mounting cup may be designed to fit any specific can or similar container. In the embodiment illustrated, the mounting cup is provided with a center hub having a substantially vertical wall **6** and a flat top wall **7**. Top wall **7** is provided with a centrally disposed aperture **8**. A sealing gasket **9** is positioned adjacent the underside of flat top wall **7** and is provided with an aperture **10** aligned with aperture **8** but slightly smaller in diameter.

A tubular shell **11**, having an open top and a peripheral bead **12** adjacent its upper edge, is dimensioned to fit within the hub of mounting cup **2**. The bottom wall **13** of shell **11** is provided with a central aperture **14** and a nipple **15** depending from the edge of wall **13** defining the aperture. A siphon tube **16** fits within nipple **15** and extends to a point spaced slightly above the bottom of can **4**. Tube **16** may be secured to the outer surface of nipple **15**, if desired. The inner wall surfaces of shell **11** are provided with ribs **17**, and a coiled spring **18** is positioned within the shell. Ribs **17** space spring **18** from the wall surfaces of the shell to prevent a sealing contact between the spring and the shell. A sealing cup **19** is seated within spring **18** and at its upper edge is provided with a lateral flange **19'** adapted to seat on the uppermost coil of the spring. The inner wall surface of cup **19** is tapered, as indicated at **20**, for a purpose hereinafter described.

After spring **18** and sealing cup **19** have been properly positioned in shell **11**, the shell is placed in the hub of mounting cup **2** with the upper edge of the shell pressed into sealing engagement with the underside of gasket **9**. The vertical wall **6** of the mounting cup is crimped inwardly under bead **12**, as indicated at **21**, to form a single unit in which the upper edge of shell **11** is held

in sealing engagement with gasket 9 by the crimp 21, and the upper edge of cup 19 is held in sealing engagement with the gasket by spring 18.

A spray tip 22 comprises a top wall 23 and a depending skirt 24. Top wall 23 is inclined and a portion of its upper surface is serrated, as indicated at 25, to facilitate the application of finger pressure laterally or downwardly against the tip when can 4 is held in a person's hand. A tubular valve stem 26 depends from the underside of top wall 23. Stem 26 extends below the lower edge of skirt 24 and is dimensioned to fit within apertures 8 and 10. Aperture 10 is slightly smaller than aperture 8 and gasket 9 snugly hugs the outer surface of stem 26. The lower end portion of valve stem 26, which extends into sealing cup 19, is tapered, as indicated at 27. Tapers 20 and 27 are complementary and provide a surface to surface contact between the lower end portion of valve stem 26 and the inner wall surface of sealing cup 19 which is engaged by the valve stem.

A longitudinal groove 29 is provided in the outer surface of the lower end portion of stem 26. The lower end of groove 29 terminates in a transverse notch 30 extending through the wall surface of valve stem 26 to provide a metering channel through which the contents of the container flow when the seal between the upper edge of cup 19 and gasket 9 is broken by downward or lateral pressure applied against the top of spray tip 22. Groove 29 extends nearly to the underside of gasket 9 so that the metering channel is open for the flow of contents from can 4 as soon as the seal between cup 19 and gasket 9 is broken. Valve stem 26 has a longitudinal passageway 31 extending almost to top wall 23 of the spray tip, and a restricted orifice 32 extends laterally from the top of passageway 31 to an enlarged discharge opening 33 provided in one side of the spray tip.

When finger pressure is applied downwardly against top wall 23, the bottom edge of valve stem 26 forces cup 19 downwardly against the action of spring 18 to break the seal between the upper edge of cup 19 and gasket 9. The pressure forces the contents of can 4 upwardly through siphon tube 16 around the upper edge of cup 19 and upwardly through passageway 31. The contents are atomized as they are forced through restricted orifice 32. The same action follows a lateral displacement of spray tip 22 except that the seal is not broken around the entire circumference of the upper edge of cup 19.

The embodiment of Fig. 6 is the same as in Figs. 1 to 5, except that the mounting cup 34 is shaped differently. Accordingly, identical structure will be indicated by the same reference numerals and the description will not be repeated. Mounting cup 34 has a centrally raised boss provided with a crimp 35 to hold shell 11 in place. Mounting cup 34 is provided with a depending skirt 36 long enough to permit its lower edge to be crimped under a lateral bead provided on the bottle or other container with which the embodiment of Fig. 6 is adapted to be used.

The embodiment of Figs. 7 to 9 is the same as that of Figs. 1 to 5 except that a foam tip 37 is substituted for the spray tip 22. The only essential difference between foam tip 37 and spray tip 22 is that the foam tip does not have any restricted orifice 32 and the foam discharge opening 38 is larger in diameter than the passageway 39 which has a uniform cross section throughout its length. Valve stem 40 is also different in that it is provided with two or more grooves 41, each of which is similar to groove 29.

The embodiments of Fig. 6 and Figs. 7 to 9 operate in exactly the same manner as the embodiment of Figs. 1 to 5.

While I have described a few preferred embodiments of my invention in considerable detail, it will be understood that the description thereof is illustrative rather than restrictive, as many details may be modified or

changed without departing from the spirit or scope of my invention. Accordingly, I do not desire to be restricted to the exact structure described.

I claim:

1. An aerosol valve assembly comprising a mounting cup having a top wall provided with an aperture and an apertured sealing gasket positioned adjacent the underside of said top wall, a shell having an open top held against said sealing gasket, a coiled compression spring seated in said shell, a sealing cup seated in said spring, the inner wall surface of said sealing cup being tapered, the upper edge of said sealing cup being held in sealing engagement with said gasket by said spring, and a dispensing tip having a tubular valve stem extending through the apertures of said top wall and said gasket to engage said sealing cup, said valve stem being tapered below said gasket to conform to the taper of said sealing cup, said valve stem having a longitudinal metering groove in the outer surface thereof adjacent to the lower end thereof and being operable by finger pressure to displace said sealing cup from sealing engagement with said gasket.

2. An aerosol valve assembly comprising a mounting cup having a top wall provided with an aperture and an apertured sealing gasket positioned adjacent the underside of said top wall, a shell having an open top held against said sealing gasket, a coiled compression spring positioned in said shell, a sealing cup seated in said spring, the upper edge of said sealing cup being held in sealing engagement with said gasket by said spring, and a dispensing tip having a tubular valve stem provided with a longitudinal metering groove in its lower end portion, said lower end portion of said valve stem extending through the apertures of said top wall and said gasket into said sealing cup, the inner wall surfaces of said sealing cup and the peripheral surface of the lower end of said valve stem each having complementary tapers to insure surface to surface contact to provide precise control of material adapted to flow through said metering groove into said valve stem when said sealing cup is displaced from sealing engagement with said gasket.

3. An aerosol valve assembly comprising a mounting cup having a top wall provided with an aperture and an apertured sealing gasket positioned adjacent the underside of said top wall, a shell having an open top held against said sealing gasket, a coiled compression spring positioned in said shell, a sealing cup seated in said spring, the upper edge of said sealing cup being held in sealing engagement with said gasket by said spring, and a dispensing tip having a tubular valve stem provided with a longitudinal metering groove in its lower end portion, said lower end portion of said valve stem extending through the apertures of said top wall and said gasket into said sealing cup, said valve stem being operable by finger pressure to displace said sealing cup from sealing engagement with said gasket, the peripheral surface of said lower end portion of said valve stem having a taper, and the inner wall surface of said sealing cup adapted to be engaged by said tapered lower end portion of said valve stem having a complementary taper to provide precise control of material adapted to flow through said metering groove into said valve stem when said sealing cup is displaced from sealing engagement with said gasket.

4. In an aerosal valve assembly, a sealing gasket provided with an aperture, a sealing cup engaging the underside of said gasket, spring means holding said sealing cup in sealing engagement with said gasket, and a tubular valve stem projecting through said aperture into said cup, said valve stem being operable by the application of finger pressure thereon to displace said sealing cup from sealing engagement with said gasket, the exterior of said stem engaging with the interior of the cup to prevent flow through said cup into said stem, the bottom of said stem and said cup defining therebetween a passage for fluid and said stem having a longitudinal

metering groove in its outer surface with the upper end of the groove terminating above the upper limit of engagement of said stem and said cup to permit material released by breaking of the seal between the sealing cup and the gasket to flow through said valve stem.

5. In an aerosol valve assembly, a sealing gasket provided with an aperture, a sealing cup engaging the underside of said gasket, spring means holding said sealing cup in sealing engagement with said gasket, and a tubular valve stem projecting through said aperture into said cup, the interengaging side wall surfaces of said valve stem and said sealing cup each having a complementary taper, said valve stem being operable to displace said sealing cup from sealing engagement with said gasket and having a longitudinal metering groove in its outer surface to permit material released by breaking of the seal between the sealing cup and the gasket to flow through said valve stem.

6. In an aerosol valve assembly, a valve shell, a sealing gasket mounted in sealing engagement with said valve shell and provided with an aperture, a sealing cup disposed in said valve shell and engaging the underside of said gasket, a spring seated in said valve shell and urging said sealing cup into sealing engagement with said gasket, and a dispensing tip having a tubular valve stem projecting through said aperture into said cup, said valve stem being operable, upon application of finger pressure to said dispensing tip, to displace said sealing cup from sealing engagement with said gasket, said valve stem having a longitudinal metering groove in its outer surface to permit material released by breaking of the seal between said sealing cup and said gasket to flow through said valve stem, the upper end of said metering groove terminating above the uppermost point of engagement between said sealing cup and said valve stem.

7. In an aerosol valve assembly, a valve shell, a sealing gasket mounted in sealing engagement with said valve shell and provided with an aperture, a sealing cup disposed within said valve shell and engaging the underside of said gasket, a spring seated in said valve shell and urging said sealing cup into sealing engagement with said gasket, and a removable and replaceable dispensing tip having a tubular valve stem projecting through said aperture into said cup, the outer surface of said valve stem engaging the inner surface of said sealing cup, said valve stem being operable, upon application of finger pressure to said dispensing tip, to displace said sealing cup from sealing engagement with said gasket, said valve stem having a longitudinal metering groove in its outer surface to permit material released by breaking of the seal between said sealing cup and said gasket to flow through said valve stem.

8. In an aerosol valve assembly, a valve shell, a sealing gasket mounted in sealing engagement with said valve shell and provided with an aperture, a sealing cup disposed within said valve shell and engaging the underside of said gasket, a spring seated in said valve shell and urging said sealing cup into sealing engagement with said gasket, and a removable and replaceable dispensing tip having a tubular valve stem projecting through said aperture into said cup, the outer surface of said valve stem engaging the inner surface of said sealing cup, said valve stem being operable, upon application of finger pressure to said dispensing tip, to displace said sealing cup from sealing engagement with said gasket, said valve stem having a longitudinal metering groove of substantially uniform cross-sectional area in its outer surface to permit material released by breaking of the seal between said sealing cup and said gasket to flow through said valve stem.

9. In an aerosol valve assembly, a valve shell, a sealing gasket mounted in sealing engagement with said valve shell and provided with an aperture, a sealing cup disposed within said valve shell and engaging the underside of said gasket, a spring seated in said valve shell and urging said sealing cup into a sealing engagement with said gasket, and a removable and replaceable dispensing tip having a tubular valve stem projecting through said aperture into said cup, the outer surface of said valve stem engaging the inner surface of said sealing cup, said valve stem being operable, upon application of finger pressure to said dispensing tip, to displace said sealing cup from sealing engagement with said gasket, said valve stem having a longitudinal metering groove in its outer surface to permit material released by breaking of the seal between said sealing cup and said gasket to flow through said valve stem, and a transverse notch at one end of said valve stem to form a passage from said groove to the interior of said tubular valve stem.

References Cited in the file of this patent

UNITED STATES PATENTS

2,506,449	Greenwood	May 2, 1950
2,594,539	Brown	Apr. 29, 1952
2,709,111	Green	May 24, 1955
2,731,298	Green	Jan. 17, 1956
2,789,012	Bretz	Apr. 16, 1957