March 27, 1951 P. A. A. BEETLESTONE ET AL 2,546,717

GARMENT HANGER WITH SPRING CLIPS

Filed March 19, 1947

Fig. 1.

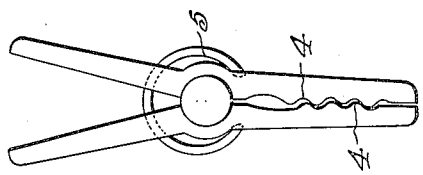

Fig. 2.

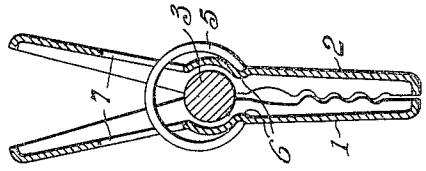

Fig. 3.

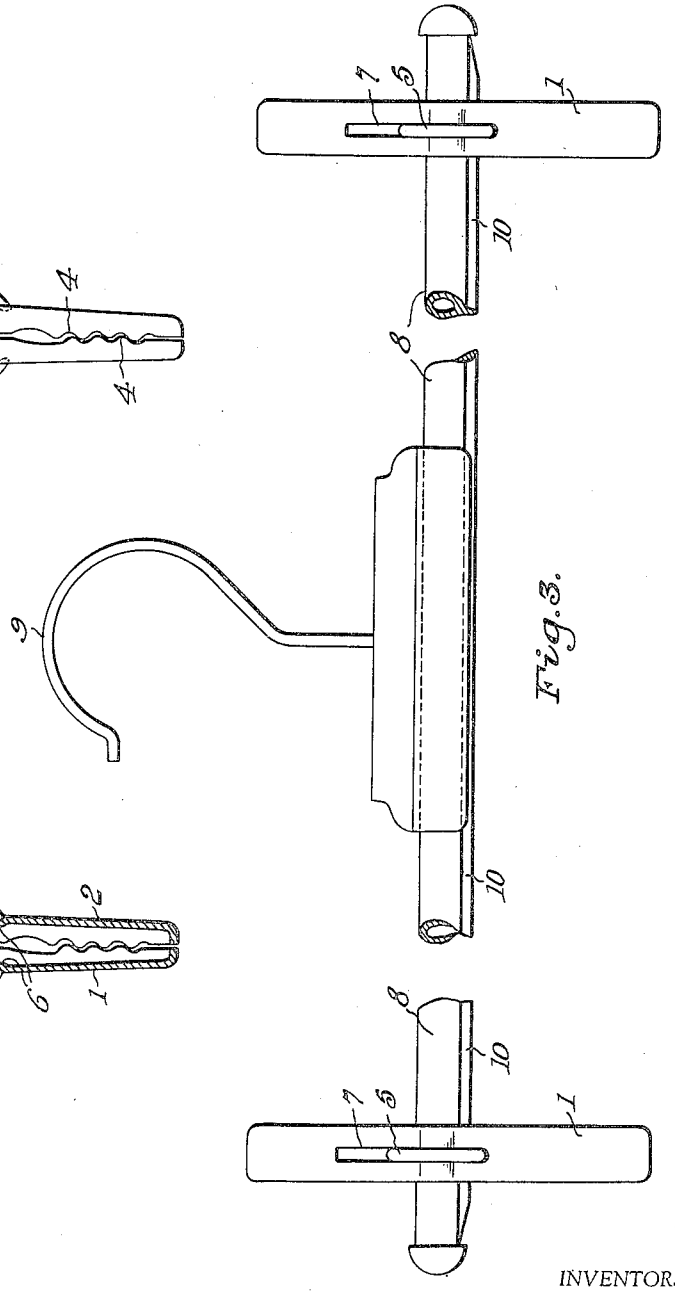

INVENTORS

PERCIVAL ALFRED ALEXANDER BEETLESTONE

HEINZ WERNER GORDON

BY Baldwin, Wight & Prevost

Their ATTORNEYS

Patented Mar. 27, 1951 2,546,717

UNITED STATES PATENT OFFICE

2,546,717

GARMENT HANGER WITH SPRING CLIPS

Percival Alfred Alexander Beetlestone and Heinz Werner Gordon, Hatfield, England, assignors to said Gordon

Application March 19, 1947, Serial No. 735,570
In Great Britain June 13, 1946
2 Claims. (Cl. 223—96)

1

This invention relates to spring clips and concerns more particularly a spring clip which can be used in the manner of a clothes peg for suspending articles of clothing and similar articles.

A spring clip according to the present invention comprises two arms pivotally mounted about a fulcrum pin arranged in the neighbourhood of the centre of the arms, which on one side of the fulcrum pin are formed with serrated jaws, and on the other side are divergent, one from the other, the serrated jaws being normally biassed together by a spring anchored on the outer surface of each arm on one side of the pivot point, and passing through each arm on the other side of the pivot point.

Preferably the spring in the form of a wire is substantially circular in elevation and is secured to each arm by being sprung into a recess or dimple therein, the arms also being slotted to allow the spring wire to pass therethrough.

Preferably the slots in the arms are positioned on the same centre line as the anchorages for the spring wire, so as to prevent sideways movement of the arms so that the serrated jaws cannot come out of alignment.

A spring clip constructed in accordance with this invention is particularly suitable for use in the suspension and stretching of garments, such for example, as trousers, skirts and the like.

The invention is illustrated in the accompanying drawing in which Figure 1 is a front elevation and Figure 2 a vertical section of the clip, whilst Figure 3 shows in elevation an arrangement of clips for the suspension and stretching of garments.

Referring to Figures 1 and 2 the clip comprises two arms 1, 2, which are pivotally mounted about a fulcrum pin 3 which is arranged in the neighbourhood of the centre of the arms 1, 2. Below the pin 3 the arms are formed with serrated jaws 4 and above the pin the arms 1, 2, are divergent one from the other. The jaws 4 are normally biassed together by a spring in the form of a wire 5 which is secured to each arm 1, 2 by being sprung into a dimple 6 therein, the spring wire 5 passing through slots 7 in the arms 1, 2. The slots 7 are positioned on the same centre line as the anchorages for the spring wire 5, thereby preventing sideways movement of the arms 1, 2 so that the jaws 4 are maintained in alignment.

In the arrangement shown in Figure 3, wherein like parts are given the same reference numeral, the fulcrum pin is in the form of a rod 8 on which two spring clips as shown in Figures 1 and 2 are mounted, the rod being provided with a hook 9 by means of which it can be suspended, and being formed with a depending flange 10 to prevent the clips slipping round on the rod 8. The spring clips can be slid to any desired position on the rod 8, so that their distance apart may be varied as desired. This is advantageous when, for example, it is desired to suspend trousers, in which case the spring clips

2

are attached to the bottoms of the trousers and slid on the fulcrum pin until they are so distanced apart from one another that the bottoms of the trousers are stretched. The spring clips will remain securely in that stretched position by reason of the fact that the increased tension of the spring, caused when the clip is opened and clipped over the trouser bottoms, also automatically greatly increases the grip of the clip on the fulcrum pin or rod, thereby preventing any slipping back of the clips, whilst rotation of the clips is prevented by the flange 10. It will of course be appreciated that the remaining portions of the trousers hang from the clips below the suspension rod. Similarly a skirt may be suspended and stretched.

What we claim is:

1. A clothing hanger and stretcher, comprising an elongated supporting rod, at least two spring clips mounted on said rod, each of said spring clips comprising a pair of opposed members having substantially centrally disposed bearing surfaces for pivotal engagement around said rod, complementary jaws formed on each of said members, a split spring ring encircling said rod adjacent each pair of opposed members with the opposite ends of said rings in tensioned engagement with respective opposed members at points which are eccentric with respect to the axis of said rod to normally urge the jaws of each pair together, and simultaneously effect frictional engagement of the bearing surfaces of said opposed members with said rod, the separation of said jaws acting upon said spring rings to cause a binding of said bearing surfaces on said rod and prevent displacement of said opposed members on said rod, a longitudinally extending rib on one side of said rod adapted to be engaged by said opposed members to limit rotation thereof on said rod, and means for suspending said rod.

2. A clothing hanger and stretcher as claimed in claim 1 wherein said opposed members are provided with registering transverse slots to receive the bodies of respective spring rings, the opposite ends of said rings engaging complementary indentations in the outer faces of respective opposed members.

PERCIVAL ALFRED ALEXANDER BEETLESTONE.
HEINZ WERNER GORDON.

REFERENCES CITED

The following references are of record in the file of this patent:

UNITED STATES PATENTS

Number	Name	Date
104,720	Farrington	June 28, 1870
175,478	Marshall	Mar. 28, 1876
1,447,083	Jonas	Feb. 27, 1923
1,489,923	Budd	Apr. 8, 1924
2,455,258	Levitin	Nov. 30, 1948