April 10, 1962 C. C. WILSON ETAL 3,029,179

APPARATUS FOR PRODUCING NON-WOVEN OR REINFORCED FABRICS

Filed Sept. 10, 1959 4 Sheets-Sheet 1

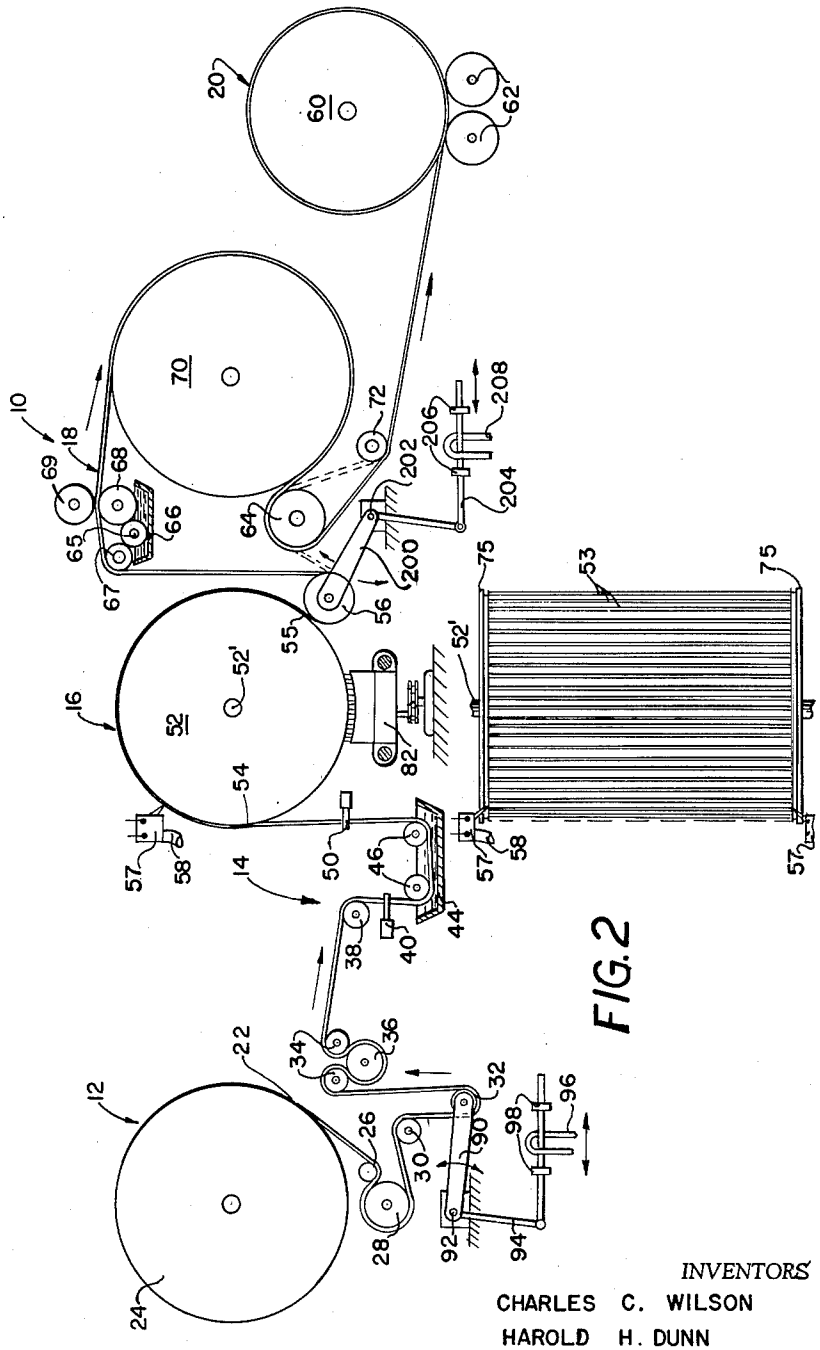

FIG. 1

FIG. 2

INVENTORS
CHARLES C. WILSON
HAROLD H. DUNN
ELI H. McANGUS

BY Cushman, Darby & Cushman
ATTORNEYS

April 10, 1962 C. C. WILSON ETAL 3,029,179

APPARATUS FOR PRODUCING NON-WOVEN OR REINFORCED FABRICS

Filed Sept. 10, 1959 4 Sheets-Sheet 2

FIG. 3

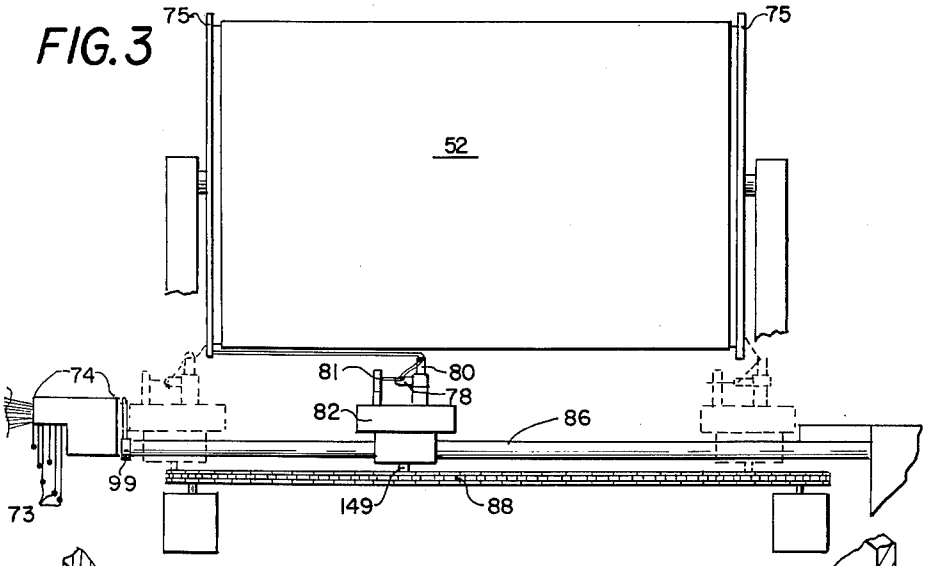

FIG. 4

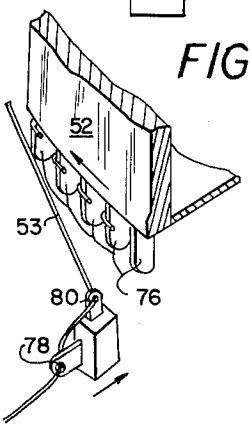

FIG. 6

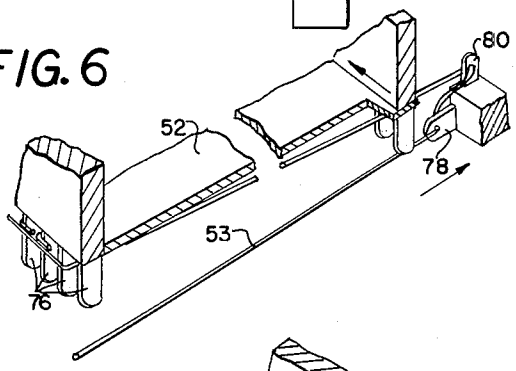

FIG. 7

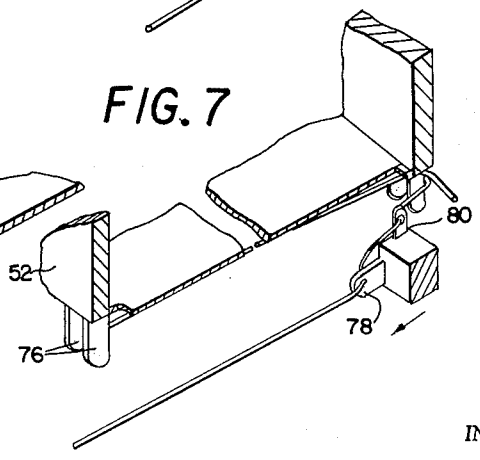

FIG. 5

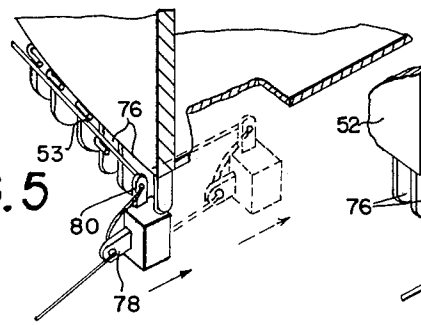

INVENTOR

CHARLES C. WILSON
HAROLD H. DUNN
ELI H. Mc ANGUS

BY Cushman, Darby & Cushman

ATTORNEY

April 10, 1962 C. C. WILSON ETAL 3,029,179

APPARATUS FOR PRODUCING NON-WOVEN OR REINFORCED FABRICS

Filed Sept. 10, 1959 4 Sheets-Sheet 3

FIG. 8

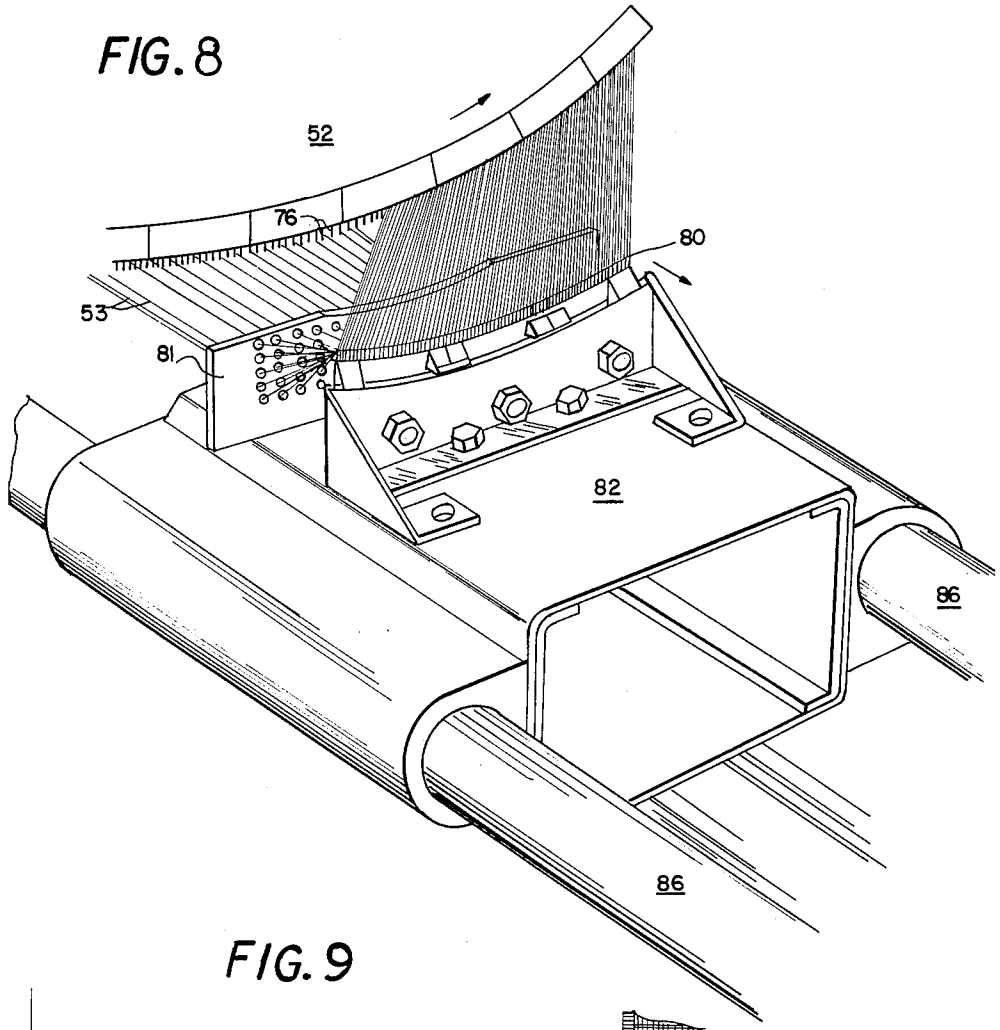

FIG. 9

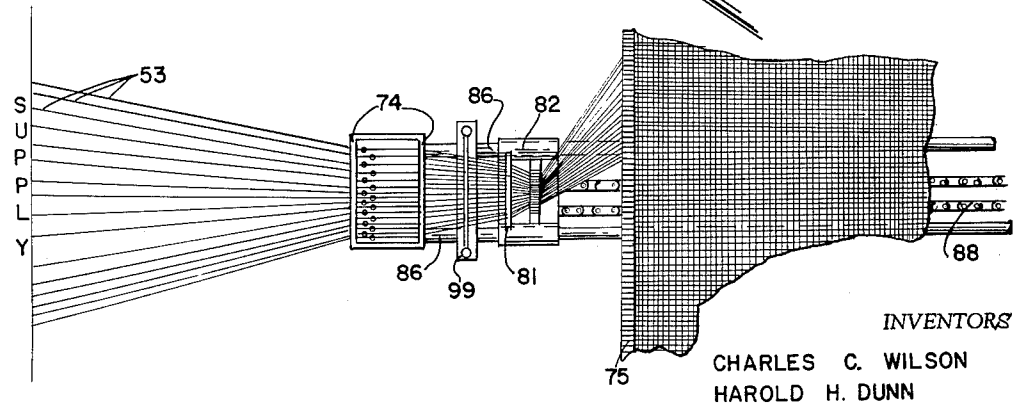

INVENTORS
CHARLES C. WILSON
HAROLD H. DUNN
ELI H. McANGUS

BY Cushman, Darby & Cushman
ATTORNEYS

April 10, 1962 C. C. WILSON ETAL 3,029,179

APPARATUS FOR PRODUCING NON-WOVEN OR REINFORCED FABRICS

Filed Sept. 10, 1959 4 Sheets-Sheet 4

FIG. 10

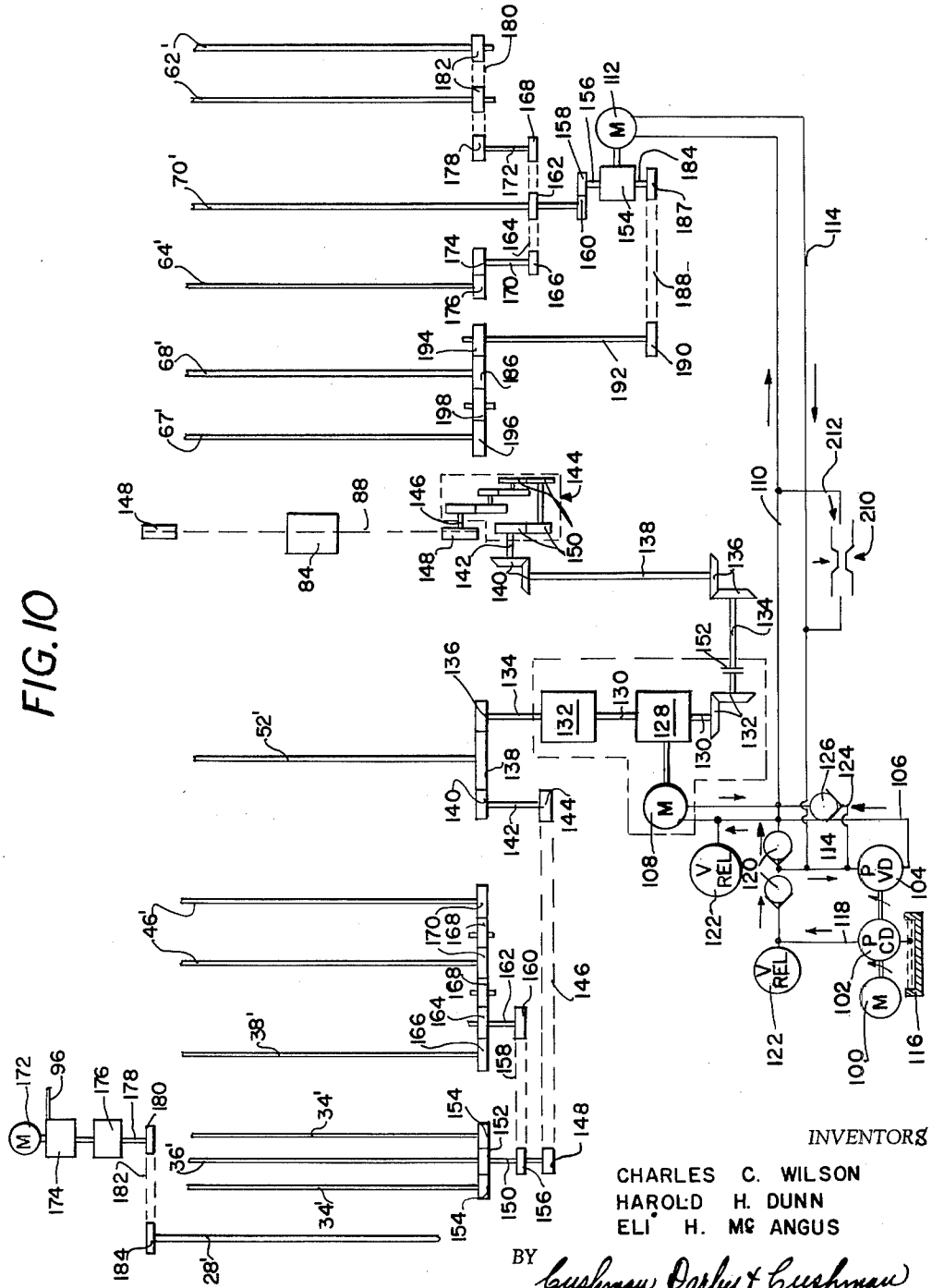

INVENTORS
CHARLES C. WILSON
HAROLD H. DUNN
ELI H. MC ANGUS

BY Cushman, Darby & Cushman
ATTORNEYS

United States Patent Office 3,029,179 Patented Apr. 10, 1962

3,029,179

APPARATUS FOR PRODUCING NON-WOVEN OR REINFORCED FABRICS

Charles C. Wilson and Harold H. Dunn, Lanett, Ala., and Eli H. McAngus, West Point, Ga., assignors to West Point Manufacturing Company, West Point, Ga., a corporation of Georgia

Filed Sept. 10, 1959, Ser. No. 839,211
6 Claims. (Cl. 156—441)

This invention pertains to apparatus for the continuous production of a non-woven fabric, in which the warp and filling yarns, fibers, or filaments, are bonded or otherwise adhesively secured together.

It is an object of this invention to provide an improved apparatus of the character described in which consolidation of the warp and filling yarns is achieved with greater precision and control, so that no misalignment thereof is possible and a non-woven fabric of improved uniformity is produced.

Another object is to provide such an apparatus that is capable of producing a non-woven fabric in which the filling and warp extend normal to one another. Due to this pattern of consolidation and to the uniformity mentioned above, the fabric produced by the apparatus of this invention possesses the appearance and uniform strength characteristics usually found only in woven cloth.

It is a further object to provide in apparatus of the type described improved means for bringing precisely aligned warp and filling yarns or filaments into pressure contact with one another while simultaneously perfecting bonding therebetween, thereby prohibiting misalignment of the yarns, and eliminating the necessity for subsequent processing, such as calendering, etc. of the cross-laid fabric.

A further object resides in the provision of means in such an apparatus that permits continuous supplying of warp and continuous delivery of the non-woven fabric, yet intermittent movement of the warp and fabric intermediate the supply and delivery ends of the apparatus.

Still other objects and advantages will be in part evident and in part pointed out hereinafter in the following description of a preferred embodiment of the invention, which should be read in conjunction with the accompanying drawings, in which like numerals indicate like parts throughout, and in which:

FIGURE 1 is a diagrammatic side view illustrating apparatus embodying the invention;

FIGURE 2 is a plan view of the cylinder of the consolidating mechanism seen in FIGURE 1, showing filling yarns placed thereupon, but with the warp yarns being omitted;

FIGURE 3 is an enlarged partially diagrammatic side view of the consolidating mechanism including the traversing carriage, the latter being shown in its extreme positions in phantom lines;

FIGURES 4–7 are enlarged perspective diagrammatic views illustrating the laying of a filling yarn or filament upon the rotating cylinder of the consolidating mechanism;

FIGURE 8 is an enlarged perspective view of the traversing carriage laying a series of filling yarns upon the cylinder of the consolidating mechanism and in its extreme right-hand position, as shown in FIGURE 3 in phantom lines;

FIGURE 9 is a partial plan view of the consolidating mechanism, showing the traversing carriage in its extreme left-hand position, parts of the mechanism being illustrated diagrammatically; and

FIGURE 10 is a diagrammatic illustration of the driving mechanism of the apparatus.

Referring more specifically to the drawings, the apparatus **10** is diagrammatically illustrated in its entirety in FIGURE 1 and broadly comprises, from left to right, warp supply mechanism **12**, bond applying mechanism **14**, consolidating mechanism **16**, rebond applying mechanism **18**, and delivery mechanism **20**. While it is contemplated that the various rolls, cylinders, and other components of the apparatus will be mounted in a suitable frame, for clarity this frame is not shown in the drawings.

Tracing the movement of warp yarns or filaments **22** through the apparatus in the direction indicated by the arrows, the same are continuously advanced at a constant rate from a suitable source of supply, such as warp beam **24**, around idler roll **26** by driven feed roll **28**. From feed roll **28** the warp **22** passes about idler roll **30** and thence about a dancer roll **32**, which is part of a take-up mechanism to be described in more detail hereinafter. The warp is next conducted between the bite of intermittently driven feed rolls **36**, **34**, about driven guide roll **38**, and through a reed **40**, which regulates the spacing between adjacent warp ends and also properly aligns the entire warp sheet for passage through an immersion pan **44**. Liquid binder or adhesive may be supplied to pan **44** from a suitable vat or tank (not shown), and suitable control means (not shown) may be employed to regulate this supply so that the liquid level in the pan is maintained such that warp **22** is immersed therein and acquires a coating of binder in passing under rolls **46**. In some instances a second reed **50** may be provided on the egress side of pan **44**, as shown, to again regulate the spacing between warp ends and align the entire warp sheet normal to the axis of a large diameter cylinder **52**, over which the warp must pass, and which constitutes one of the two basic components of consolidating means **16**.

Cylinder **52** is of hollow thin-walled construction, resembling a multi-cylinder slasher can, and is heated in a customary manner by steam conducted to the interior thereof through its hollow shaft **52**. Intermittent rotation in a clockwise direction (as seen in FIGURE 1) is imparted to the cylinder by a suitable driving mechanism, described hereinafter, which is correlated to the drive for feed rolls **34**, **36**, so that there is no relative movement between the surface of the cylinder and the warp **22** passing thereover. That is, when cylinder **52** is stationary, the warp **22** from points **54** to **55** is also stationary, and when the cylinder rotates the warp moves at such a rate as to maintain a fixed position relative to the cylinder surface.

As best seen in FIGURES 3–8, a band **75** of accurately spaced pins **76** in any number up to approximately forty per inch extends about each end of cylinder **52**, radiating outwardly slightly beyond the curved surface thereof and also being longitudinally spaced a small distance from its ends. In a manner described more fully hereinafter, filling yarns or filaments **53** are placed upon the lower surface of cylinder **52** parallel to its axis, between the bands **75** (see FIGURE 2), each of the filling strands being looped at the cylinder ends about pins **76**, and thus held securely in place. Intermittent rotation of the cylinder carries the precisely aligned filling into pressure contact at **54** with warp **22** which, due to the binder thereupon, adheres to the filling. During the continued correlated intermittent advancement of the warp and filling from **54** to **55**, the bond therebetween is finalized by evaporation of solvent or moisture from the binder due to the heat of cylinder **52**.

Before the bond has become complete, however, the ends of filling **53** pass into contact with cutting devices **57**, which may comprise stationary or rotating blades, hot wires, etc., mounted upon the frame of the apparatus in any suitable manner so that they extend into the narrow spaces between bands **75** and the ends of cylinder **52**. Upon contacting devices **57**, filling **53** is severed,

and thus freed from pins 76. A suction collection means may be provided in association with each cutting device to collect the severed waste left upon pins 76 and deliver the same through conduit 58 to a suitable receptacle (not shown) for subsequent salvage.

The exact location between 54 and 55 of devices 57 depends upon the specific characteristics of the warp and filling being run and also upon the type binder utilized. Inasmuch as some filling yarns or filaments tend to shrink slightly when heated, it is desirable to have the ends thereof free, i.e., severed, before the bond is finalized. Otherwise, distortion of the non-woven fabric might result. On the other hand, the ends of filling 53 should not be severed before the bond has set to a sufficient extent for the filling 53 to be carried by warp 22 without slippage after contacting devices 57. For any given set of conditions, however, the correct point of location for devices 57 can be determined.

It should be noted that the coated warp 22 is slightly spaced to some extent from the heated surface of cylinder 52, thereby diminishing the possibility of the binder adhering to and fouling this surface. Thus the uncoated filling 53 partially separates the warp from the cylinder from its point of introduction thereupon at 54 until the departure of the integrated non-woven fabric therefrom at 55.

As indicated partially in dotted lines in FIGURE 1, this fabric may then be passed about a second dancer roll 56, over continuously driven guide roll 64 and under idler roll 72 directly to a delivery roll 60, upon which it is continuously wound by driven rolls 62. In some instances, however, it may be desirable to subject the fabric to an additional bonding or coating operation, in which event it is led from roll 56 to a second immersion pan 66, as indicated in solid lines in the drawing.

Pan 66 which may be supplied with the desired liquid coating agent in the same manner as pan 44, has associated therewith driven rolls 67, 68, and idler rolls 65, 69, which permit the selection of a variety of coating methods. The mounting (not shown) of roll 69 is such that it may be moved vertically so that it contacts roll 68, as seen in FIGURE 1, or clears the same by a substantial distance. Thus in its downward position, the fabric is subjected to a squeezing action as it passes over roll 68, whereas in its upward position no squeezing occurs. Additionally, roll 65 may be bypassed entirely by the fabric, as shown, in which event it is merely "kisser" coated by roll 68; alternatively, by utilizing roll 65, the fabric may be immersed, with or without subsequent squeezing.

Whichever coating procedure is employed, is followed by drying the fabric by passing it about continuously driven cylinder 70, which may be heated in the same manner as cylinder 52. The fabric is then conducted about rolls 64 and 72, and subsequently wound up upon roll 60, as previously described.

Having explained the travel of warp 22 and the completed fabric through the apparatus 10, the means for consolidating filling 53 therein will now be described in greater detail. Referring particularly to FIGURES 3 and 9, filling yarns 53 are led from a creel or other suitable source (not shown) through apertured plates 74 and convergence yarn guide 99 mounted upon machine 10 in proximity to one end of cylinder 52. Any suitable means, such as weights 73, may be utilized to keep the filling taut and remove slack therefrom. Filling 53 is then conducted beneath cylinder 52 through a third guide plate 81 and through holes at the outer ends of two series of pins 78, 80. The latter series, comprised of pins 80, extends upwardly substantially normal to the former, and has a concave curvature and spacing complementing that of a sector of pins 76 of the same arc length on cylinder 52.

Both plate 81 and pins 78, 80 are secured to a traversing carriage member 82, shown more clearly in FIGURE 8, which is mounted for movement parallel to the axis of cylinder 52, as upon rails 86. The traverse of carriage 82 is such that it is continuously driven by means of chain 88, as subsequently described, from a starting point slightly outside one end of cylinder 52 to a point slightly outside the other end thereof, where it reverses and returns; the carriage is shown in its extreme positions in phantom lines in FIGURE 3. It will thus be apparent that each traverse of carriage 82 causes a series of filling yarns 53 to be laid across the bottom surface of cylinder 52 and between the pins 76, since pins 80 pass between the same.

The driving mechanisms for cylinder 52 and carriage 82 are coordinated so that during the interval when the latter is traveling intermediate the ends of the former, the cylinder is stationary. As pins 80 pass outside pins 76, laying filling 53 therebetween, cylinder 52 commences to rotate. During the brief interval required for carriage 84 to reverse and start its return course, cylinder 52 will have quickly rotated through an angle sufficient to carry the pins 76 with filling laid therebetween upwards toward 54, and present a new bottom series of pins 76 to pins 80. As the filling 53 just laid upon cylinder 52 is carried upwards, the ends thereof leading directly to carriage 82 are held against the outside of pins 76, and as pins 80 pass between pins 76 of the new series presented at the bottom of cylinder 52, filling 53 is looped thereabout and held firmly in place. No slippage of the filling upon the cylinder 52 is then possible until it passes into contact with cutting devices 57, at which time it will be secured to warp 22.

The foregoing sequence is schematically illustrated in FIGURES 4–7, showing one filling filament 53 as it is laid by pins 78, 80, between pins 76 on cylinder 52. In FIGURE 4 the previously laid filling 53 has been carried upward by rotation of the cylinder, and pins 78, 80 are moving inwardly. Continuation of this inward movement carries pin 80 between pins 76, as shown in full lines in FIGURE 5, and beyond as shown in phantom lines. Filament 53 is looped about the pin 76 immediately to the left of pin 80 as it passes thereby. Cylinder 52, stationary at this point does not again begin to rotate until filling 53 has been laid completely thereacross and pin 80 has passed between pins 76 on the far side thereof (see FIGURES 6 and 8). This rotation is again through an angle sufficient to carry the immediately laid filling away from the carriage pins 80, i.e., through an arc equal to the distance thereacross. At the completion of this rotation, pin 80 passes once again between pins 76, as seen in FIGURE 7, locking the previously laid filling in place, and laying a new strand as it returns. It will be apparent that the filling laid on the return traverse of the carriage is not taken from the source of supply, but merely transferred from pins 78 to pins 80, since two layers of filling are taken by carrier 82 from the creel on every forward traverse.

Referring now to FIGURE 10, in which a numeral with a prime designation indicates the shaft of the roll or cylinder identified in FIGURE 1 by the corresponding numeral, a preferred driving mechanism for the apparatus includes an electric motor 100 in driving relationship with a variable delivery pump 102 and a constant delivery pump 104. The output of pump 104 is transmitted through a closed hydraulic system including conduit 106, fixed hydraulic motor 108, conduit 110, hydraulic motor 112, and return conduit 114, and produces a flow as indicated by the arrows. Pump 102 is of relatively small displacement, serving merely to prime the foregoing closed system by drawing fluid when necessary from sump 116, through line 118 and check valves 120, and thence into the closed system, thereby prestressing the same and permitting stopping and starting without lost motion.

Included within both the closed and priming systems are standard pressure relief valves 122, and additionally included within the former system is a line 124 and check

valve 126 for avoiding possible cavitation damage to pump 104 in the event of a sudden reduction in pressure thereacross. Furthermore, it is contemplated that suitable gauges, filters, and the like, may also be provided, although not illustrated herein.

The hydraulic motor 108 is utilized to provide drives through a suitable transmission 128 to both the traversing carriage 82 and shaft 52' of cylinder 52. Thus from transmission 128 a shaft 130 extends to a roller gear or Geneva drive 132 of suitable construction, which is effective to intermittently drive shaft 134, which in turn causes intermittent rotation of cylinder 52 through its gear 136 and gear 138 upon shaft 52'.

The intermittent rotation of cylinder 52 is utilized to effect corresponding intermittent movement of the warp 22 passing thereover by virtue of its gear 138 being drivably connected to feed rolls 34, 36 through gear 140, shaft 142, gear 144, chain or diagrammatically illustrated gear train 146, gear 148, shaft 150 and gears 152, 154, the latter being upon shafts 36' and 34' respectively. Also keyed or otherwise affixed to shaft 150 is gear 156 which, as shown, effects intermittent rotation of guide roll 38 and immersion rolls 46 by means of chain or gear train 158, gear 160, shaft 162, gear 164, gear 166 upon shaft 38', gears 168, and gears 170 upon shafts 46'.

While the intermittent warp movement effected in the vicinity of cylinder 52 by the above-described drive mechanism is necessary for proper operation of the apparatus, it is desirable for several reasons that the warp be continuously delivered from beam 24, not the least of which is the excessive power which would otherwise be required to continuously and rapidly index the heavy warp beam. The shaft 28' of feed roll 28 is therefore constantly driven by a relatively small electric motor 172 through a variable speed hydraulic transmission 174, speed reducer 176, shaft 178, gear 180, chain or gear train 182, and gear 184, so that warp 22 is continuously delivered from warp beam 24.

In order to compensate for the continuous delivery of warp by feed roll 28 yet intermittent feeding thereof by rolls 34, 36, a take-up mechanism including dancer roll 32 is provided, as shown in FIGURE 1. Roll 32 is rigidly connected by arms 90, only one of which is shown in FIGURE 1, to a shaft 92 which is pivotally secured to the frame of the apparatus. It will be apparent that during the intervals when rolls 34, 36 are feeding, roll 32 will be raised by warp 22; and while these feed rolls are stationary, roll 32 will be lowered by its own weight. While this upward and downward movement of roll 32 is usually sufficient to compensate for the ordinary operating slack in warp 22, means may also be provided to automatically vary the speed of feed roll 28 should this slack become either excessive or insufficient. This is accomplished, as shown in FIGURE 1, by a linkage 94 secured to one end of shaft 92 and operatively connected to a control lever 96 for the variable speed hydraulic transmission 174 for motor 172, so that upon excessive pivotal movement of shaft 92, one of the stops 98 upon linkage 94 will actuate lever 96 to increase or decrease the speed of roll 28, or stop it entirely. Upon the return of roll 32 to its normal range of pivotal movement, the other of the stops 98 will act against lever 96 to restore roll 28 to normal operating speed.

As previously mentioned, motor 108, through transmission 128, is also utilized to drive traversing carriage 82; thus shaft 130, bevel gears 132, shaft 134, bevel gears 136, shaft 138, and bevel gears 140, effect continuous rotation of input shaft 142 to gear box 144, the output shaft 146 of which drives one of the sprockets 148 about which chain 88 is passed. As shown in FIGURE 3, chain 88 extends transversely of the apparatus beneath cylinder 52, and has extending upwardly from a link thereof stud 149, the upper end of which is received within a suitable recess (not shown) provided in the underside of carriage 84. By virtue of this connection, it is apparent that movement of chain 88 causes the carriage to traverse as described heretofore.

Correlation between the movements of carriage 82 and cylinder 52 may be effected by an adjustable rigid coupling 152 interposed at any convenient point, as within shaft 134 as shown, between transmission 128 and sprockets 148. It will be recognized that correlation between the cylinder and carriage drives is of primary importance due to the small clearance distance between pins 80 and 76.

By the proper utilization of suitable eccentric gears 150 within gear box 144, carriage 82 is caused to traverse at varying velocities, traveling fastest while moving underneath cylinder 52 and more slowly while reversing direction outside an end thereof, during which reversal the cylinder must index so as to carry the previously laid filling into pressure contact with warp 22. By varying the velocity of carriage 82, the restriction imposed by the definite minimum time interval necessary for cylinder 52 to index is overcome, and the production of the apparatus is markedly increased.

Referring now to the right-hand portion of FIGURE 10, motor 112 is drivably connected through transmission 154 to all driven shafts behind cylinder 52, namely, those for rolls 67, 63, 64, and 62, and for cylinder 70. Thus rotation of shaft 156 is transmitted through its gear 158 to the gear 160 mounted on shaft 70'. A second gear 162 on shaft 70' drives a chain or gear train 164, which drives gears 166, 168, of shafts 170, 172, respectively. Through its gear 174, shaft 170 drives gear 176 on shaft 64'; and through its gear 178 and chain or gear train 180, shaft 172 drives gears 182 upon shafts 62'. The second shaft, 184, of transmission 154 drives gear 186 upon shaft 63' through gear 187, chain or gear train 188, gear 190 on shaft 192, and gear 194. In turn, gear 186 drives a gear 196 on shaft 67' through a gear 198.

All the shafts driven by motor 112 are continuously rotating, since it is highly desirable that the winding-up of the cross laid fabric upon roll 60 be continuous. To correlate this continuous winding-up of the fabric with its intermittent movement at 55 (see FIGURE 1), a second take-up mechanism is provided between cylinder 52 and roll 67. This mechanism, which includes dancer roll 56, arms 200 (only one of which is shown in FIGURE 1), shaft 202, linkage 204, and stops 206, is the same in operation and construction as to the take-up mechanism located forward of cylinder 52 and previously described. In this latter mechanism, the lever 208 actuated by excessive pivotal movement of roll 56 controls an adjustable orifice 210 (see FIGURE 10) in a conduit 212 extending between the input and return conduits 110 and 114 respectively, associated with motor 112. Therefore, excessive pivotal movement of roll 56 varies the amount of hydraulic fluid by-passed through conduit 210, causing a corrective increase or decrease in the speed of motor 112 relative to the speed of motor 108.

It will thus be seen that there has been provided by this invention an apparatus in which the various objects hereinbefore set forth, along with many practical advantages, are achieved. As various possible embodiments may be made of the novel features of the invention, all without departing from the scope thereof, it is to be understood that all matter hereinbefore set forth or shown in the accompanying drawings is to be interpreted as illustrative, and not in a limiting sense.

What is claimed is:

1. Apparatus for producing cross laid bonded fabric comprising a cylinder having an annular series of radially extending pins at each end thereof, means for advancing a warp sheet in longitudinal direction and transversely of the cylinder axis to the periphery of said cylinder, means for intermittently rotating said cylinder, means for applying liquid binder to said warp sheet adjacent the point of initial contact of said warp with said cylinder, guide means disposed adjacent the periphery of said cylin-

der and extending parallel to the axis thereof, a carriage movably mounted on said guide means, a series of pins extending from said carriage toward the axis of said cylinder, said carriage pins being in arcuate array and spaced and adapted to pass between said cylinder pins, means for supplying continuous filling strands to said carriage pins, means for reciprocating said carriage on said guide means, and means coordinating said cylinder rotating means with said carriage reciprocating means whereby rotation of said cylinder occurs only when said carriage pins are outside one of said series of cylinder pins.

2. Apparatus as defined in claim 1, wherein said carriage adjoins said cylinder at a station leading the point of initial contact of said warp sheet therewith, whereby the warp sheet is applied to the cylinder over said filling.

3. Apparatus as defined in claim 1, including means for heating said cylinder.

4. Apparatus as defined in claim 1, including cutting means associated with the periphery of said cylinder inside each pin series thereof, said cutting means being positioned at a station substantially trailing the point of initial contact of said warp with said cylinder, whereby the warp and filling may be effectively bonded before the filling ends are severed thereby.

5. Apparatus as defined in claim 1, including means for feeding the warp sheet at constant speed, and variable takeup means interposed between the warp sheet feed and said cylinder.

6. Apparatus as defined in claim 1, including means for delivering bonded fabric at constant speed, and variable takeup means interposed between said cylinder and said delivery means.

References Cited in the file of this patent

UNITED STATES PATENTS

1,292,890	Scherf	Jan. 28, 1919
2,812,797	Estee et al.	Nov. 12, 1957
2,936,022	Stevenson	May 10, 1960

FOREIGN PATENTS

440,191	Great Britain	Dec. 16, 1935
167,150	Australia	Mar. 5, 1956
209,386	Australia	June 27, 1957