Aug. 7, 1934. M. L. HASELTON ET AL 1,969,369

ELECTRICAL SIGNALING AND INDICATING MEANS

Original Filed Feb. 23, 1928 2 Sheets-Sheet 1

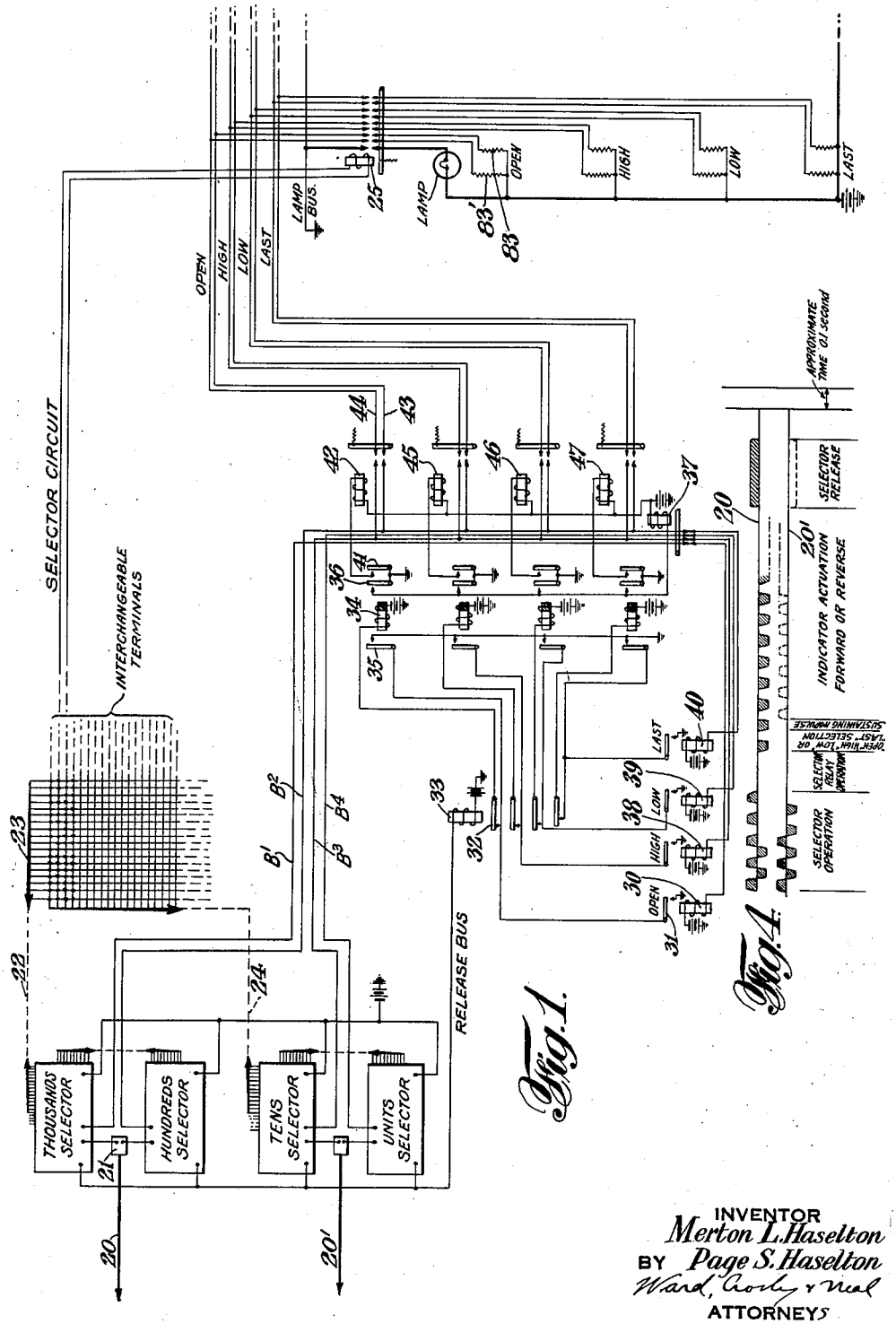

Fig. 1.

INVENTOR
Merton L. Haselton
BY Page S. Haselton
Ward, Cooley & Neal
ATTORNEYS

Aug. 7, 1934. M. L. HASELTON ET AL 1,969,369

ELECTRICAL SIGNALING AND INDICATING MEANS

Original Filed Feb. 23, 1928 2 Sheets-Sheet 2

Fig. 2.

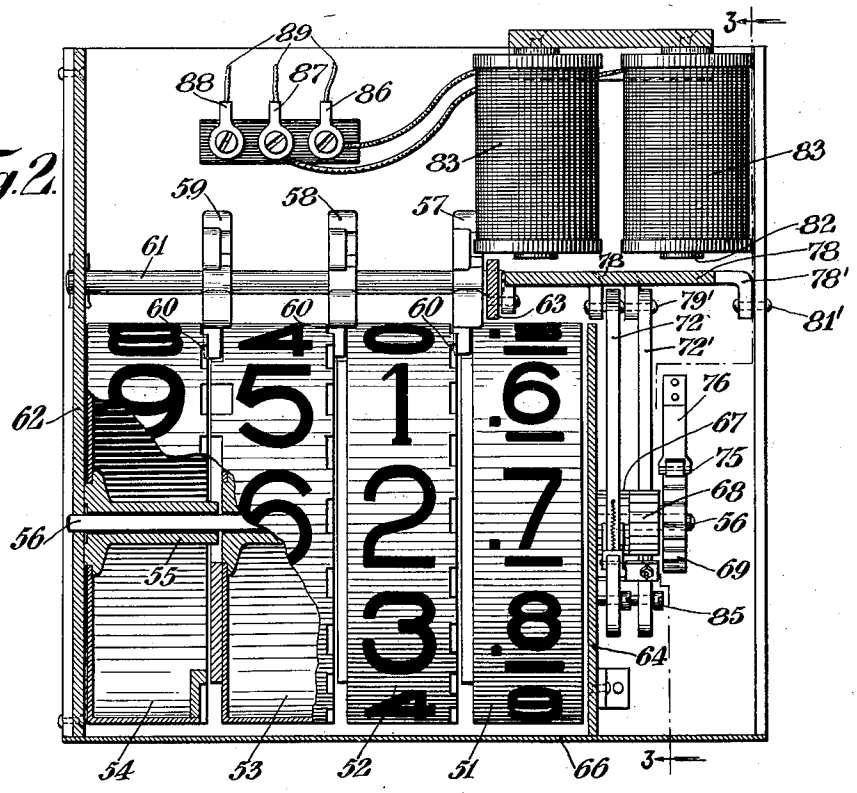

Fig. 3.

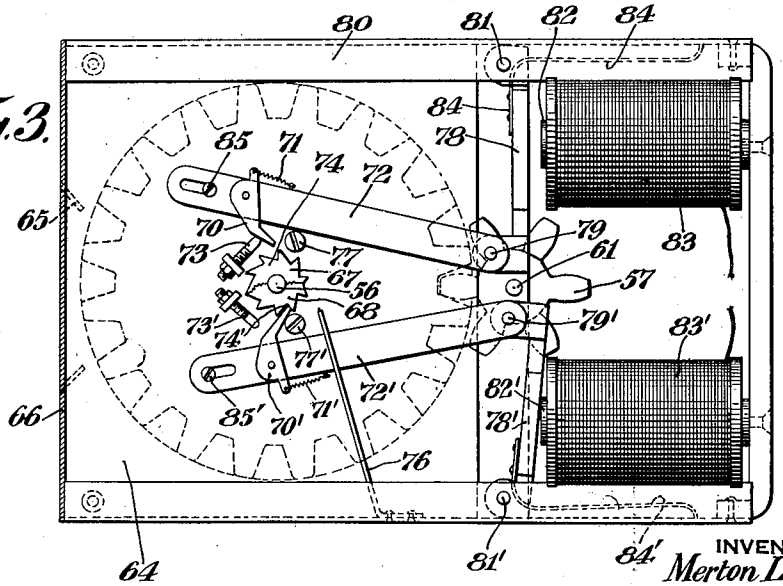

INVENTOR
Merton L. Haselton
BY Page S. Haselton
Ward, Cooley & Neal
ATTORNEYS

Patented Aug. 7, 1934 1,969,369

UNITED STATES PATENT OFFICE

1,969,369

ELECTRICAL SIGNALING AND INDICATING MEANS

Merton L. Haselton, New York, N. Y., and Page S. Haselton, Montclair, N. J., assignors to The Teleregister Corporation, New York, N. Y., a corporation of Delaware

Original application February 23, 1928, Serial No. 256,160, now Patent No. 1,890,878, dated December 13, 1932. Divided and this application February 5, 1930, Serial No. 425,992

1 Claim. (Cl. 177—353)

This invention relates to electrical signaling and indicating means and more particularly to signaling apparatus and methods such as described in our application Ser. No. 256,160 filed Feb. 23, 1928, Patent 1,890,878 dated Dec. 13, 1932, of which this is a division.

While not limited thereto, the invention is particularly adaptable to the transmission and posting of varying quotations or prices of a multitude of items such as stocks, bonds or commodities.

The transmission of the quotations may be controlled from central points, such as stock exchanges, and arrangements are provided whereby a large number of brokers may be simultaneously provided with quotations service for as many of the stocks or other items as are desired or of particular interest at each broker's office or other establishment having suitable receiving apparatus.

The objects of our invention include the provision of apparatus of the above indicated class which will be applicable with a wide degree of flexibility to various operating conditions and which will be rapid, accurate and dependable in operation.

One of the objects of this invention is the provision of an indicator unit which may be operated forwardly or reversely directly from its old setting to indicate a new quotation and which permits of the use of a small number of indicator actuating circuits.

Further and more specific objects, features and advantages will more clearly appear from the following description taken in connection with the accompanying drawings and claim.

The invention consists in the novel signaling methods, features, circuit arrangements and combinations of circuits and parts as hereinafter described, but by way of example only, as being illustrative of a certain preferred embodiment of the invention.

In the drawings, Fig. 1 shows a general wiring diagram of an electrical indicating apparatus;

Fig. 2 is a horizontal sectional view through an indicating unit;

Fig. 3 is a transverse sectional view taken on the line 3—3 of Fig. 2; and

Fig. 4 indicates groups of current variations transmitted over a pair of lines for the control of the system disclosed.

Certain phases of this invention are applicable to the apparatus and signaling methods disclosed in the copending applications of Merton L. Haselton, Ser. No. 244,873, filed January 6, 1928, Patent 1,890,876 dated Dec. 13, 1932, and Ser. No. 248,069, filed January 20, 1928, and also certain phases of the inventions of said Haselton applications are applicable to the signaling apparatus disclosed herein.

Where the information to be posted comprises stock quotations or similar items, it is desirable to make the information available, generally speaking, in the same arrangement as with the conventional types of manually attended stock boards or "blackboards" as heretofore used. The apparatus in the particular form hereinafter described is particularly adapted to that purpose, although according to this invention the posting of quotations may be accomplished with much greater rapidity and accuracy than with stock boards which are manually attended, and in addition a substantial saving of labor is made possible since the equipment for numerous brokers may be operated from a central point by a single operator or group of operators.

Our invention according to the embodiment herein disclosed may comprise indicator units in which the four digit indicating dials or drums may be geared together and actuated in unison by a single magnet or set of magnets. With this form of indicator, instead of restoring the dials to zero or to a normal position prior to the setting up of a new quotation, the indicator may be turned "up" or "down" an amount corresponding to the price of quotation change, that is, an amount equalling the difference between the old and new quotations. As hereinafter explained, one electro-magnet may be used to move the dials forward for a price advance and another electro-magnet may be used to turn the dials backward in the event that a lower price is to be quoted. A unitary indicator assembly is therefore provided for each of the four quotations, such as "Open", "High", "Low" and "Last", for each item. One type of circuit arrangement which may be utilized to control such indicators is shown in Fig. 1. The operation of the circuits shown in Fig. 1 is similar to that of another form described in the parent application.

The transmission channels comprise lines 20 and 20^1. Positive impulses over line 20 are allocated by the polarized relay 21 to the thousands selector to set the thousands selector in accordance with the thousands digit, designating the indicator to be selected, and then to establish an impulsing circuit over line B^1 responsive to positive impulses over line 20. A negative impulse over line 20 is allocated by the polarized relay

to the hundreds selector and after selection has been performed in accordance with the hundreds digit of the designating number an impulsing circuit is established over line B_2 responsive to negative impulses over line 20. Similarly positive and negative impulses over line 20^1 cause selecting operations by the tens and units selectors, and cause impulsing circuits to be established over lines B_3 and B_4 responsive respectively to positive and negative impulses over line 20^1.

The thousands and hundreds selectors cooperate to connect ground and battery to one of the lines 22 extending to a vertical row of jacks in the panel board 23 while the tens and units selectors cooperate to ground a horizontal row of jacks by grounding one of the lines 24. Double plugs in the panel board at the intersections of lines 22 and 24 connect the selected activated and grounded lines 22 and 24 with the terminals of one of a large number of magnets 25 each of which operates a multi-contact relay to connect all of the indicators in the corresponding group to the "open", "high", "low" and "last" bus lines as later described.

After the group selection has been effected and impulsing circuits B_1, B_2, B_3 and B_4 have been provided, a positive impulse over line 20 will cause an impulse over line B_1 to energize the "open" magnet 30 which completes a circuit from ground over its make switch 31, break switch 32 of release magnet 33 over the coil of the slow to release magnet 34 to battery and ground. Energization of magnet 34 establishes a self-closing circuit from ground, battery, its coil, break switch 32, its make switch 35 to ground.

Energization of magnet 34 also connects ground over its make switch 36 to coil of relay 37 to battery and ground to disconnect all of the lines B_1, B_2, B_3 and B_4 from the "open", "high", "low" and "last" magnets 30, 38, 39 and 40, to prevent energization of any of these magnets by a subsequent impulse over any of these lines, until relay 37 is released after operation of the indicators.

Energization of magnet 34 also through its make switch 41 connects ground to coil of "open" bus line selecting magnet 42 to battery and ground. Energization of magnet 42 extends lines B_2 and B_3 respectively to the forward actuating bus line 43 and rearward actuating bus line 44 whereby subsequent negative impulses over line 20 will cause impulses on line B_2 and bus line 43 to set a selected indicator ahead by reason of the energization of magnets 83, and whereby negative impulses over line 20^1 will cause impulses over line B_3 and bus line 44 to set a selected indicator back, magnets as at 83' being then energized.

Selections of bus lines by impulses over lines B_3, B_4 and B_2 are effected through magnets 38, 39 and 40 which control magnets 45, 46 and 47, corresponding to those controlled by magnet 30 to respectively connect lines B_2 and B_3 with the "high", "low" and "last" indicator busses.

As single impulses over the lines B1, B2, B3 and B4 respectively select the "open", "last" and "low" indicators and as it is possible to send an impulse over B1 or B2 to select the "open" or "last" indicator and at the same time send an impulse over B3 or B4 to select the "high" or "low" indicator, it is obvious that a high degree of flexibility of selection is provided for. In addition to individual selection of the "open", "high", "low" and "last" indicators, it is possible to simultaneously select the "open" and "high", the "open" and "low", the "last" and "high" and the "last" and "low" indicators in pairs. The "high" and "last" and the "low" and "last" ranges may be selected and operated in combination whenever the next to the last quotation is the same as the previous "high" or "low" price. It has been found upon examination of consecutive prices of a large number of stocks, especially in the cases of stocks that are quite active and in which the price variations are small, that the new "high" price or the new "low" price may in a great many instances be set-up at the same time that the "last" price is set-up.

As disclosed in the parent application, each selector mechanism includes a magnet, which when released by a prolonged impulse of the proper polarity and on the appropriate wire 20 or 20', grounds a release circuit to release all of the selectors and to energize the release magnet 33 to remove the ground from the magnet 34 and any of the corresponding magnets, which through release of their make switches remove the grounds from the energized bus selecting magnets 42, 45, 46 and 47, thereby disconnecting the bus lines such as at 43 and 44 from the lines B2 and B3 and connecting the "open", "high", "low" and "last" magnets 30, 38, 39 and 40 to the lines B1, B3 and B4 and B2 respectively for a subsequent indicator selection.

As in this system the indicators are actuated by impulses over lines B2 and B3 which are caused respectively by negative impulses over line 20 and positive impulses over line 20', it is obvious that the prolonged impulse to effect release of the selectors and the selecting magnets in Fig. 1 may be a positive impulse over line 20 or a negative impulse over a line 20', neither of which will cause resultant impulses on the lines B2 and B3 and will therefore not affect the indicators.

A series of impulses for effecting selection of a stock, for selecting an indicator for indicating the "open", "high", "low" or "last" price of the stock, and for actuating the selected indicator forwardly is diagrammatically indicated in Fig. 4. The impulses are transmitted in the order from left to right.

With the particular example shown in Fig. 4, the first series of positive and negative impulses over lines 20 and 20' are allocated to the proper selectors to cause energization of the multi-contact relay 25 of stock number 5234. The subsequent space allows time for operation of the selector relays and for associating lines B1 and B2 to line 20 and lines B3 and B4 to line 20'.

The next impulse on line 20 shown as a negative impulse causes an impulse on line B2 to energize the "last" magnet 40 and to connect the "last" bus lines 43 and 44 to lines B2 and B3 and disconnect all of the magnets 30, 38, 39 and 40 from the lines B1, B2, B3 and B4.

The next series of negative impulses over line 20 cause impulses over line B2 and line 43 to turn the selected indicator ahead. If the indicator were to be turned back, then positive impulses would be sent over line 20' as indicated by dotted lines, resulting in impulses over line B3 and line 44.

The prolonged impulse for the release of the selectors and the bus line selecting magnets may be a positive impulse on line 20 as shown or a negative impulse on line 20' as indicated by dotted lines.

One form of indicator well adapted to this circuit arrangement is a geared dial indicator

shown in Figs. 2 and 3. The use of this type of indicator is particularly desirable in some instances, since but two electromagnets are required, operated over three wires for each group of four digit wheels for indicating one quotation. The use of a correspondingly small number of ratchet mechanisms for driving the digit indicating drums is accordingly also made possible.

Furthermore, when such indicators are made reversible, it is unnecessary to transmit the entire new quotation each time that a price change takes place. That is, only the digits need be changed which are different from the corresponding digits in the previous quotation. The necessity for restoring the indicators to zero is accordingly also obviated, which in some instances may be advantageous.

As shown in Fig. 2, the indicator group may consist of the four digit drums or dials as at 51, 52, 53 and 54 carried upon hubs as at 55, which in turn are rotatably mounted upon a shaft 56. These four dials correspond respectively to the "fractions", "units", "tens" and "hundreds" digits of the quotation to be posted.

The dials consist preferably of light sheet material, such as aluminum, in order that the inertia may be substantially minimized. The "fractions" dial 51 may be fixed directly to the shaft 56 to rotate therewith, while the other dials are free to rotate with respect to the shaft. Dials 52, 53 and 544 may, however, be operatively geared to the "fractions" dial 51 by "carrier" pinions as at 57, 58 and 59 cooperating with teeth as at 60 formed in the edges of the dials 52, 53 and 54 respectively. These pinions may be rotatably mounted on a shaft 61, and together with the teeth on the dials constitute the well known intermittent register gear train commonly known as the Geneva movement.

Shaft 61 may be rotatably mounted within an end plate 62 and a strut 63. Shaft 56 may be also mounted in the end plate 62 at one end, and in a division plate 64 at its other end. It will be understood that a fractional part of the circumference of the dials sufficient to exhibit one character is made visible through apertures as at 65 in a face plate 66 provided as a part of the indicator container (see Fig. 3).

In order to provide means for rotating the shaft 56, together with dial 51, in either direction and for restraining the movement thereof when the desired step-by-step rotational movement has been completed, two oppositely directed ratchets as at 67 and 68 may be provided upon the outer end of the shaft 56 (see Fig. 3). The ratchet 67 is arranged to cooperate with a spring pressed pawl 70 having a spring 71, to turn the digit wheels in a direction to exhibit higher numbers. The pawl 70 may be mounted upon a thrust bar as at 72 so arranged that upon the forward stroke of the bar 72, the pawl 70 moves away on an adjustable stop pin as at 73 and is brought into engagement with one of the teeth as at 74 on the ratchet 67. Continued forward movement of the bar 72 thereupon causes the ratchet to be rotated together with the shaft 56 against the pressure of a jockey roller 75 which may be pressed against a cam as at 69 by its supporting spring 76. When the shaft 56 is rotated through an angle equivalent to one step ($\frac{1}{10}$ of a complete revolution to exhibit the next character), the forward movement of the pawl 70 is arrested by a front stop pin 77, causing the pawl to bind in the ratchet 67.

A similar pawl and controlling mechanism is arranged to cooperate with the ratchet 68 to move the shaft 56 step-by-step in the opposite direction. Similar parts of the two ratchet and pawl mechanisms are identified with the same reference numerals accompanied by prime marks in the case of the mechanism cooperating with ratchet 68. The pawl 70' is illustrated in the position which it assumes at the completion of its forward movement.

The thrust bar 72 may be pivoted to an armature 78 as by a pivoting pin 79, the armature in turn being pivoted to the top frame 80 as at 81. The armature is normally urged away from a pole 82 of a magnet 83 by a spring 84. The armature thus retained, acts through the thrust bar to keep the bar normally in engagement with a stop pin 85. The thrust bar 72' is similarly controlled. Accordingly the pawls 70 and 70' are normally held out of contact with their respective ratchets.

It will be evident that each time the magnets 83 or 83' are energized, the shaft 56 will be advanced or turned back through an angle equivalent to one step and it will be observed that the mechanism for advancing the shaft is operative independently of the mechanism for effecting the reverse movement and accordingly, the two movements will not interfere.

Suitable terminals as at 86, 87 and 88 may be provided for the electro-magnet lead wires 89; the terminal 88 being connected as a common return for both pairs of electro-magnets, while the other two terminals provide the necessary two operating circuits. These terminals are preferably of a quick detachable type to facilitate removal of the indicator units for inspection, repair or replacement purposes, etc.

While the invention has been described with respect to certain particular preferred examples which give satisfactory results, it will be understood by those skilled in the art after understanding the invention, that various changes and modifications may be made without departing from the spirit and scope of the invention and it is intended therefore in the appended claim to cover all such changes and modifications.

What is claimed as new and desired to be secured by Letters Patent of the United States is:

In an electrical indicating apparatus comprising a large number of groups of indicators in which group selection is effected by positive and negative impulses on two transmission lines, the combination of groups of indicator units comprising indicator elements geared together and actuable forwardly and reversely by impulses over single forward and reverse bus lines, means responsive to impulses over said transmission lines for connecting all of the indicators of any desired group to said bus lines, a plurality of impulsing channels over which are transmitted impulses responsive to impulses over said transmission lines, and means controlled by impulses over said impulsing channels for connecting one or more pairs of indicator unit forward and reverse lines to two of said impulsing channels, whereby impulses over one of said two channels will actuate the selected indicator or indicators forwardly and impulses over the other of said channels will actuate said selected indicator or indicators reversely.

MERTON L. HASELTON.
PAGE S. HASELTON.