June 9, 1936. J. H. REYNOLDS 2,043,492

WELL PACKER

Filed Feb. 4, 1935 2 Sheets-Sheet 1

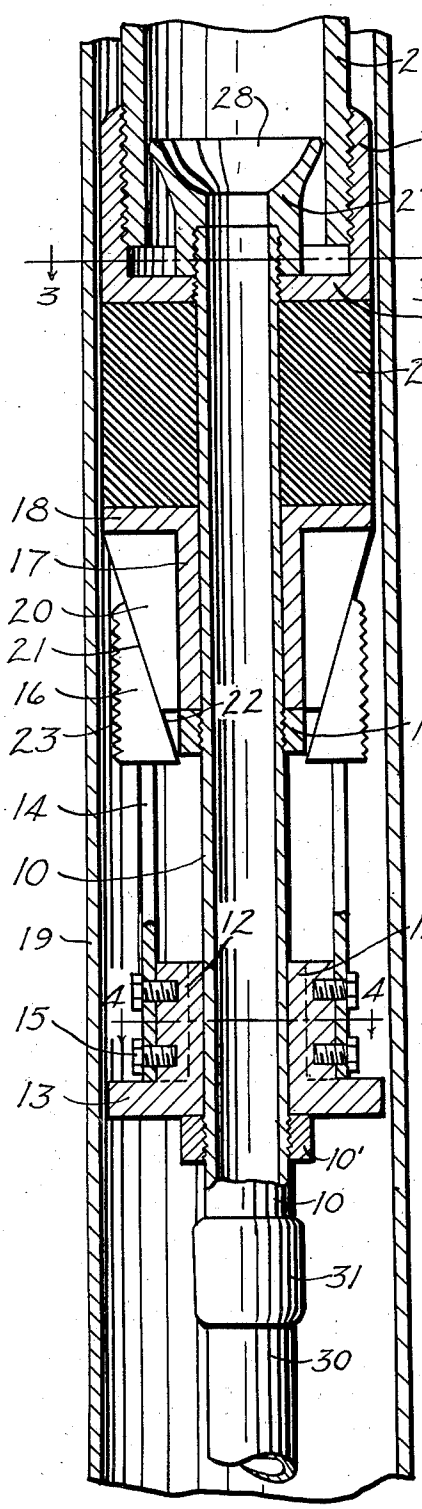

Fig. 1

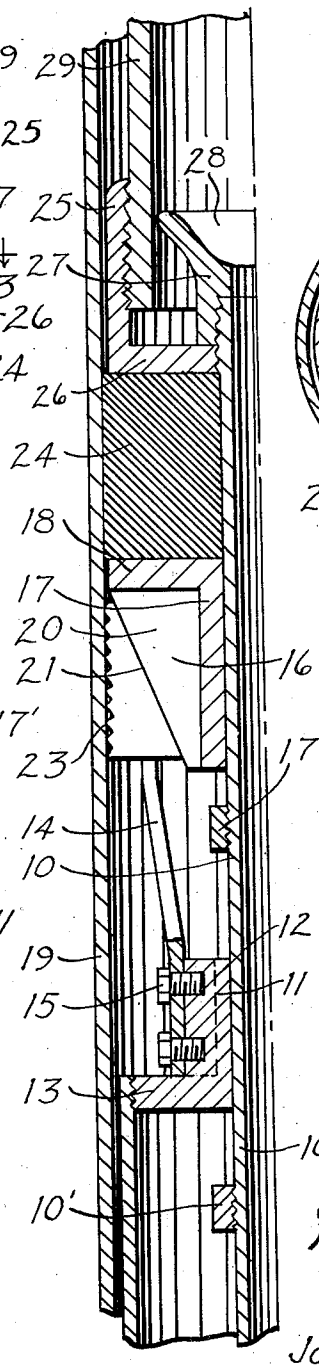

Fig. 2

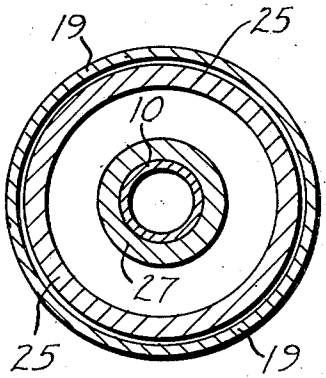

Fig. 3

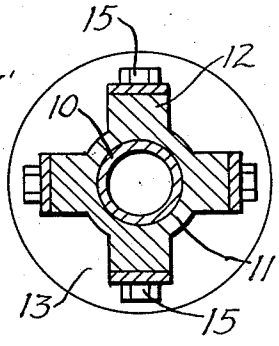

Fig. 4

Inventor

Joseph H Reynolds

By Jack A. Schley

Attorney

June 9, 1936. J. H. REYNOLDS 2,043,492

WELL PACKER

Filed Feb. 4, 1935 2 Sheets-Sheet 2

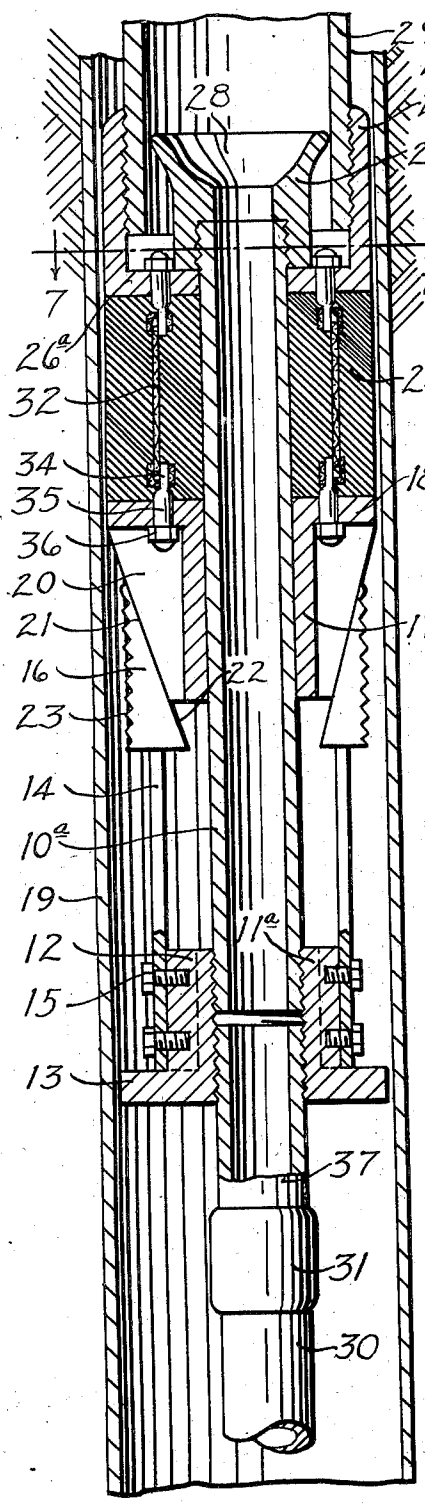

Fig. 5

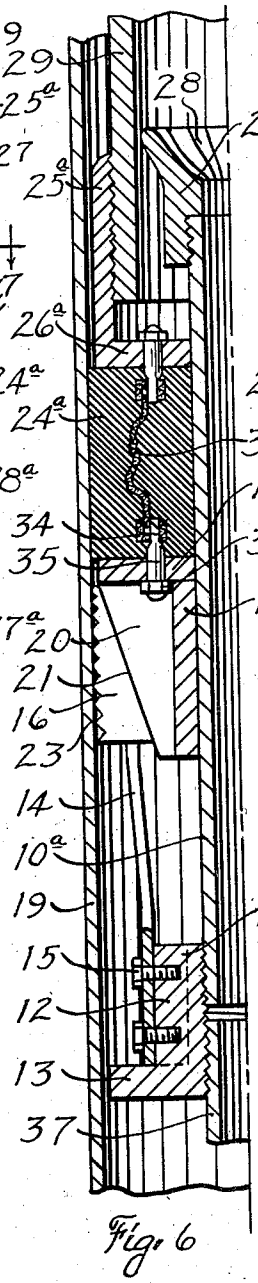

Fig. 6

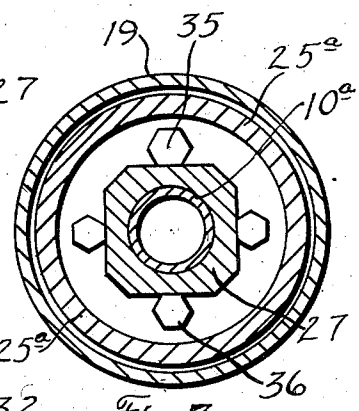

Fig. 7

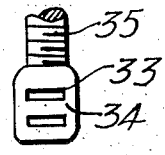

Fig. 8

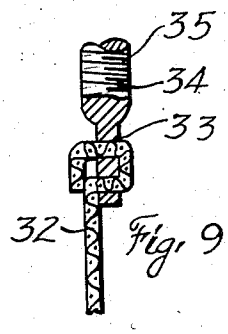

Fig. 9

Inventor

Joseph H. Reynolds

By Jack Astley

Attorney

Patented June 9, 1936

2,043,492

UNITED STATES PATENT OFFICE

2,043,492

WELL PACKER

Joseph H. Reynolds, Cisco, Tex.

Application February 4, 1935, Serial No. 4,772

10 Claims. (Cl. 166—10)

This invention relates to new and useful improvements in well packers.

One object of the invention is to provide a well packer particularly adapted to be set at the bottom of a casing in connection with the working barrel of a pump, whereby the well may be pumped without placing tubing in the well as is the usual custom.

An important object of the invention is to provide an improved well packer particularly adapted for use in repressuring wells, said packer being arranged to hold the fluid column the full length of the hole to prevent channeling of gas or air from the key wells.

Another object of the invention is to provide a packer having a mandrel arranged to be connected with a working barrel at the bottom of a casing, thereby eliminating tubing, the weight of said barrel and the mandrel being sufficient to set the packer when downward movement in the casing is arrested; the mandrel having connection with the slip head whereby when it is desired to remove the packer, an upward pull on said mandrel will be contributed to said head, thereby releasing the slips.

A further object of the invention is to provide a packer which may be used in connection with a working barrel and having a guide at the upper end of the mandrel of said packer for causing the traveling valve to enter said mandrel and thus pass down to the working barrel.

A particular object of the invention is to provide a packer including a slip head on which the packer is supported, said head having gripping slips slidable thereon, the packer being arranged to be set when the slips are operated to arrest the downward movement of the same and the weight of the superstructure is imposed on the packing element, there being a flexible connection between the super-structure and slip head so that when removal of the packer is desired, an upward pull on the superstructure will be contributed to the head by means of said flexible connections, thereby releasing the slips.

A construction designed to carry out the invention will be hereinafter described, together with other features of the invention.

The invention will be more readily understood from a reading of the following specification and by reference to the accompanying drawings, in which an example of the invention is shown, and wherein:

Figure 1 is a vertical sectional view showing a packer constructed in accordance with the invention in position in a casing and prior to being set,

Figure 2 is a partial, vertical sectional view showing the packer after it has been set,

Figure 3 is a horizontal, cross-sectional view taken on the line 3—3 of Figure 1,

Figure 4 is a horizontal, cross-sectional view taken on the line 4—4 of Figure 1,

Figure 5 is a vertical sectional view, showing another form of the invention in position in a casing and prior to being set,

Figure 6 is a partial, vertical sectional view showing the packer set with the casing,

Figure 7 is a horizontal, cross-sectional view, taken on the line 7—7 of Figure 5, and

Figures 8 and 9 are details of the flexible connections in the packing elements.

In the drawings, the numeral 10 designates a tubular mandrel which extends axially through the packer structure. A slip-supporting collar 11 is slidably mounted on the mandrel and normally rests on an annular supporting ring 10' which is threaded on the mandrel near the lower end thereof. This collar is provided with equally spaced upright bosses 12 and a circular base flange 13 extending beyond the bosses and forming a guide for maintaining the packer in a central position while it is being lowered or raised in the casing. Upwardly extending spring arms 14 are secured to the bosses 12 by screws 15. Casing-gripping slips 16 are fastened to the upper ends of the arms.

A head 17 surrounds the mandrel 10 and rests on a supporting collar 17' screwed onto the mandrel. The head is provided with a circular top flange 18 slightly less in diameter than the casing 19 in which the packer is to be set. Equally spaced bosses 20 are provided on the head below the flange 18. The outer faces 21 of these bosses are inclined complementary to the inclined inner-faces 22 of the slips 16. It will be apparent that when the mandrel and head 17 are moved downwardly from the position shown in Figure 1 to the position shown in Figure 2, the inclined faces of the bosses riding upon the inclined faces 22 of the slips, will spread or displace said slips outwardly whereby the teeth 23 on their outer faces will grip the casing. These teeth are cut so as to hold the packer against both upward and downward displacement.

A packing member or collar 24 surrounds the mandrel and rests upon the top flange 18. This collar may be made of rubber compound or any other suitable, flexible packing material. An annular box 25 is mounted on the mandrel above

the packing collar, and includes a circular bottom 26 co-extensive with the flange 18. The upper end of the mandrel 10 is screw-threaded and is screwed into the bottom 26 and also into the collar 27 of a guide 28. By observing Figures 1 and 2, it is obvious that the bottom 26 of the box contacts the lower end of a collar 27.

The box 25 is of such diameter as to have a free, vertical clearance in the casing 19. A section 29 of tubing has its lower end screwed into the box which is internally screw-threaded for this purpose. The upper portion of the guide 28 is flared so that when the traveling valve of the pump is lowered into the casing and passes down the section 29, the guide 28 will direct it into the mandrel 10. The section 29 may be used as a connection for suspending the packer from the grapple by which the device is lowered into the casing.

This packer is particularly adapted to be used in connection with a working barrel 30, which is attached to the lower end of the mandrel 10 by means of a collar 31. The invention is not, however, to be limited to such use, and the packer may be used wherever found practical. When the traveling valve is passed down through the mandrel, it will continue down through the nipple into the working barrel. When the packer is set and the working barrel immersed in the liquid, it is obvious that the casing above the packer becomes a conductor for the fluid and therefore tubing is not required.

In setting a packer, it is lowered into the well with the parts in position, as shown in Figure 1. When the flange 13 of the collar 11 strikes the liner, (not shown) or any other means at the bottom of the casing for supporting it and further downward progress is arrested, the packer is in position to be set. When the packer is released, the weight of the working barrel and mandrel will force the entire structure downwardly, with only the slip collar 11 stationary. The supporting ring 10' first moves away from the underside of the collar 11. The packing collar 24 and the head 17 which rests on the ring 17' move downwardly between the slips 16 which are supported by the stationary collar 11. The inclined faces 21 riding on the inclined faces 22 will spread the slips outwardly and cause their teeth 23 to bite into the wall of the casing 19, thus firmly supporting and locking the head 17 in position. The head will then support the collar 24 and the working barrel and mandrel being secured to the box 25 will exert sufficient downward pressure on said collar to compress it and expand said collar into intimate contact with the wall of the casing 19, whereby said casing will be packed off. In this position, the supporting rings 10' and 17' have moved downwardly with the mandrel away from the collar 11 and head 17 respectively, as shown in Figure 2.

When it is desired to remove the packer, it is merely necessary to attach the lifting means to the mandrel 10 and pull upwardly on the same. When this occurs, the collar 17' will be lifted and engage the underside of the head 17. Continued upward pulling on the mandrel will slide the head 17 upwardly from between the slips 16. The spring arms 14 having been displaced outwardly, when the packer was set, will tend to assume an upright position and the collar 11 will move downwardly on the mandrel until it rests on the ring 10', thereby releasing said slips from the casing. By this arrangement, the removal of the packer and all parts thereof is assured.

It is pointed out that by using this packer all the tubing of the well may be eliminated. The advantages, such as saving in cost and labor, are obvious. Further by employing this packer wells may be efficiently repressured. It is the practice when a well stops flowing normally, air, gas or other pressure is applied underground from key wells which surround the producing wells. When tubing is used in the latter well, it has been found that the auxiliary pressure channels through the liquid being raised by such pressure and loses its effectiveness. By employing the improved packer shown in the drawings, a column of liquid is held the full length of the hole, and in cases of repressuring, the weight of this column is sufficient to prevent channeling of the air or gas therethrough.

In Figures 5 to 9, another form of the invention is shown. In this form, the packer is not set by the weight of the working barrel, and mandrel, but by the weight of the superstructure above the packing collar 24a. The construction is the same except that the collar 11 is fastened to the mandrel instead of being slidable thereon, and the supporting rings 10' and 17' are eliminated. Also, the box 25a is slidable on the mandrel rather than secured thereto, and the box and head 17a are fastened together by a plurality of flexible straps 32 disposed vertically in the packing collar 24a. The straps have their ends threaded through eyes 33 in keepers 34 on the ends of bolts 35. The straps are preferably moulded in the packing collar 24a. The connections may be made of metal belting, or other suitable material, and may be fastened to the box and head in any desired manner. The ends of the bolts 35 project from the bottom and top of the collar 24a and extend through the bottom 26a of the box and through the flange 18a of the head. Nuts 36 on the ends of the bolts serve to hold the part. It is obvious that with the supporting ring 17' eliminated, the box and head are slidable on the mandrel.

It is obvious that when the collar is expanded as in Figure 5, the straps 32 will be extended, but when the collar 24a is compressed, as in Figure 6, the straps will be buckled or will yield so that the collar can be easily compressed. When an upward pull is exerted upon the box 25a, the straps 32 will impart this pull or lift to the head 17a, as is obvious. The invention is not to be limited to flexible straps or to the bolts 35 as any means for forming the connection may be used.

In this form, the sides of the collar 27, as shown in Figure 7, are flattened so that the collar is held against rotation by the nuts 36 which are screwed onto the bolts 35 passing through the bottom 26a of the box. This prevents relative rotation of the box and collar, and as the mandrel 10a is fastened to the collar 27 and also to the collar 11a, these parts are likewise held. By this arrangement, the slips 16 are maintained in alinement with the bosses 20 and therefore grooves or keys are not necessary between the slips and said bosses.

In use, this packer is used in connection with the working barrel 30 which is attached to a nipple 37 by means of the collar 31.

In setting this form of the packer, it is lowered into the well with the parts in position, as shown in Figure 5. When the working barrel strikes the liner, or any other means at the bottom of the casing for supporting it and further down-

ward progress is arrested, the packer is in position to be set. When the tubular section **29** is released, its weight will force the box **25a** downwardly on the mandrel whereby the packing collar **24a** will move the head **17a** downwardly between the slips which are supported by the stationary collar **11a**. The inclined faces **21** riding on the inclined faces **22** will spread the slips outwardly and cause their teeth **23** to bite into the wall of the casing **19**, thus firmly supporting and locking the head **17a** in position. The head will then support the collar **24a** and the super-structure will exert sufficient downward pressure on said collar to compress it and expand said collar into intimate contact with the wall of the casing **19**, whereby said casing will be packed off. When the collar is compressed, the straps **32** will be buckled as is shown in Figure 2.

When it is desired to remove the packer, it is merely necessary to attach the lifting means to the tubular section **29**, and pull upwardly on the same. When this occurs, the box **25a** will be lifted and the straps **32** will thus be extended. If the collar should be vulcanized to the casing the straps will still perform their function owing to the elasticity of the collar. Continued upward pulling on the straps will slide the head **17a** upwardly from between the slips **16**. The spring arms **14** having been displaced outwardly, when the packer was set, will tend to assume an upright position and will thus release said slips from the casing.

What I claim and desire to secure by Letters Patent is:

1. A packer comprising, a tubular mandrel, a supporting ring on said mandrel, a slip head surrounding said mandrel and resting on said ring, a second supporting ring near the lower end of the mandrel, a slip supporting collar slidable on the mandrel and resting on said ring, slips carried by the collar engaged by the head for lateral displacement thereby to move the slips into gripping engagement with the casing, a flexible packing collar above the head, and a box above the packing collar secured to the mandrel, whereby the weight of the mandrel is on the box and packing collar.

2. A packer comprising, a tubular mandrel, a supporting ring on said mandrel, a slip head surrounding said mandrel and resting on said ring, a second supporting ring near the lower end of the mandrel, a slip supporting collar slidable on the mandrel and resting on said ring, slips carried by the collar engaged by the head for lateral displacement thereby to move the slips into gripping engagement with the casing, a flexible packing collar above the head, a box above the packing collar secured to the mandrel, whereby the weight of the mandrel is on the box and packing collar, and a working barrel connected and alined with the mandrel and extending below the same.

3. A packer comprising, a tubular mandrel, a supporting ring on said mandrel, a slip head surrounding said mandrel and resting on said ring, a second supporting ring near the lower end of the mandrel, a slip supporting collar slidable on the mandrel and resting on said ring, slips carried by the collar engaged by the head for lateral displacement thereby to move the slips into gripping engagement with the casing, a flexible packing collar above the head, a box above the packing collar secured to the mandrel, whereby the weight of the mandrel is on the box and packing collar, a working barrel connected and alined with the mandrel and extending below the same, and a flared guide at the upper end of the mandrel for guiding a pump plunger into said mandrel.

4. A packer comprising, a tubular mandrel, a collar fastened on said mandrel, spring arms carried by said collar, slips carried by said arms, a slip head slidable on the mandrel and engaging said slips for expanding the same, a flexible collar carried by the head, flexible connections extending through the collar and attached to the head, a coupling member mounted on the mandrel and attached to the flexible connections above the collar, and a guide carried by the upper end of the mandrel co-acting with the coupling member to prevent relative rotation of said coupling member and the mandrel, whereby the slips and the slip head are held against relative rotation.

5. A packer comprising a tubular mandrel, a slip head surrounding said mandrel and free to slide thereon, a slip supporting collar on said mandrel, slips carried by the collar engaged by the head for lateral displacement thereby to move the slips into gripping engagement with the casing walls, means for retaining the slip head on the mandrel in a fixed position with relation to the slips when the packer is being lowered into the well whereby said slips are held in a retracted position, a flexible packing collar above the head, a box above the packing collar secured to the mandrel, whereby the weight of the mandrel is imposed on the box and packing collar after the slips have engaged the casing wall due to the head having been displaced with relation thereto, the retaining means for the head serving to retract the head from within said slips when the packer is raised, whereby release of the slips and removal of the packer may be accomplished, a working barrel connected to and alined with the mandrel and extending below the same, and a flared guide at the upper end of the mandrel for guiding a pump plunger into said mandrel.

6. A packer comprising a tubular mandrel, a slip head surrounding said mandrel and free to slide thereon, a slip supporting collar on said mandrel, slips carried by the collar engaged by the head for lateral displacement thereby to move the slips into gripping engagement with the casing walls, a flexible packing collar above the head, a coupling above the collar, and flexible connections extending from the coupling through the collar and attached to the head to normally hold said head in a fixed position with relation to the slips whereby said slips are retracted upon downward movement of the packer, said connections serving to withdraw the head upwardly from between the slips to release the same when the packer is raised.

7. A packer comprising, an upright tubular support, a slip head mounted to slide on said support, means on the support below said head for holding the head in a fixed position on said support, slips carried by the support, said slips and head being arranged to be vertically displaced with relation to each other to expand said slips into gripping engagement with a casing, a flexible packing collar surrounding the support and carried by the head, a threaded box surrounding the support above the collar and movable downwardly with relation to said head for deforming said collar into packing engagement

with the casing, a working barrel connected and alined with the support and extending below the same, and a flared guide at the upper end of the support for guiding a travelling valve into said support.

8. A packer comprising, an upright support, a working barrel connected and alined with the support and extending below the same, a slip head mounted to slide on said support, means on the support below said head for holding the head in a fixed position on said support, slips carried by the support engaged by said head for lateral displacement thereby to engage the casing wall, a flexible packing collar above the head, a threaded box above the collar and secured to the support, whereby the weight of said support and barrel rests on said box and packing collar to deform said packing collar into packing engagement with the casing when the slips have been laterally displaced to grip the casing wall to hold the head stationary, and a flared guide at the upper end of the support for guiding a travelling valve into said support and barrel.

9. A packer including, a tubular mandrel adapted to be anchored in a well, a slip head slidable on said mandrel, an annular support on said mandrel, slips carried by said support and disposed to be displaced by said head into engagement with the well casing, a flexible packing collar mounted on and surrounding the mandrel, an annular member surrounding the mandrel and carried upon the packing collar and adapted to engage the lower end of the well tubing, and a flared guide mounted on the upper end of the mandrel adapted to guide tools into the mandrel.

10. A packer including, a tubular mandrel adapted to be anchored in a well, a slip head mounted on the mandrel, an annular support on said mandrel, slips carried by said support and disposed to be displaced by said head into engagement with the well wall, a flexible packing collar mounted on and surrounding the mandrel, an annular member surrounding the mandrel and carried upon the packing collar, a tubular section carrying the annular member, and a tool guide on the upper end of the mandrel within the tubular section.

JOSEPH H. REYNOLDS.