Jan. 30, 1968 H. MESTER 3,366,837

SURGE SUPPRESSION APPARATUS FOR POLYPHASE HIGH VOLTAGE SYSTEM

Filed July 27, 1964 2 Sheets-Sheet 1

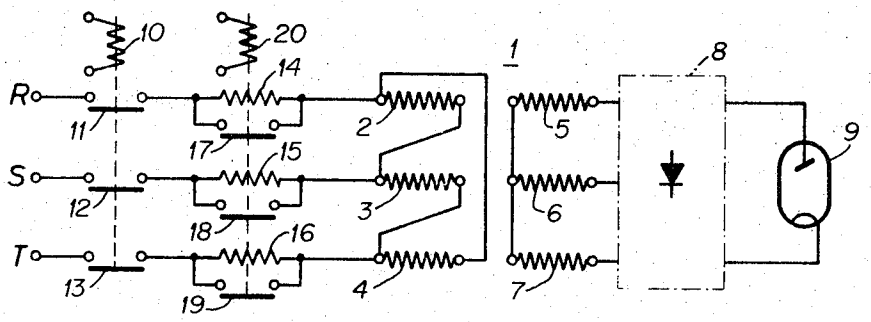

Fig.1

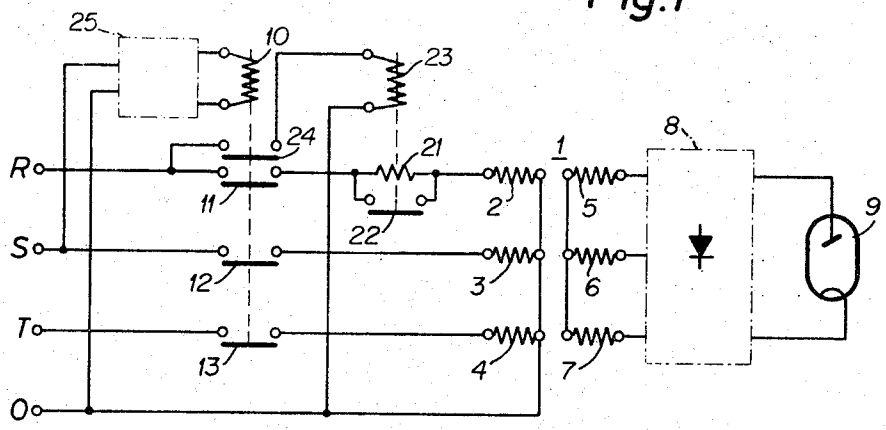

Fig.2

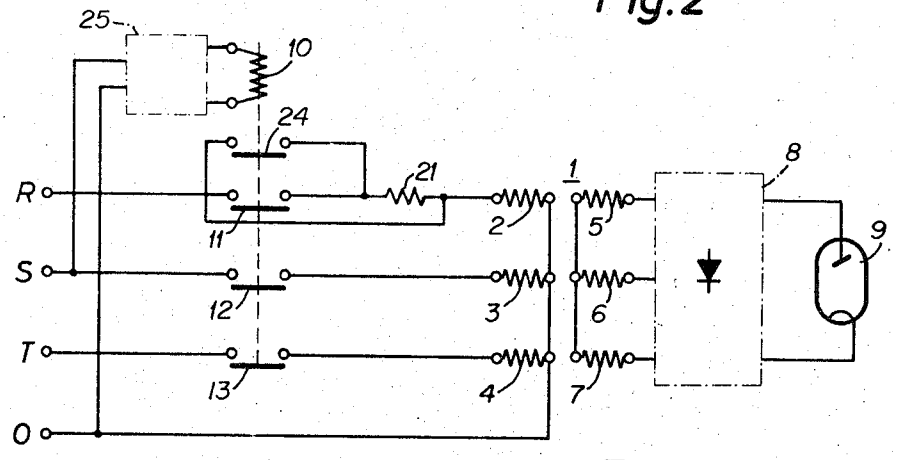

Fig.3

INVENTOR.
HEINZ MESTER

BY
Frank R. Trifari
AGENT

Jan. 30, 1968 H. MESTER 3,366,837

SURGE SUPPRESSION APPARATUS FOR POLYPHASE HIGH VOLTAGE SYSTEM

Filed July 27, 1964 2 Sheets-Sheet 2

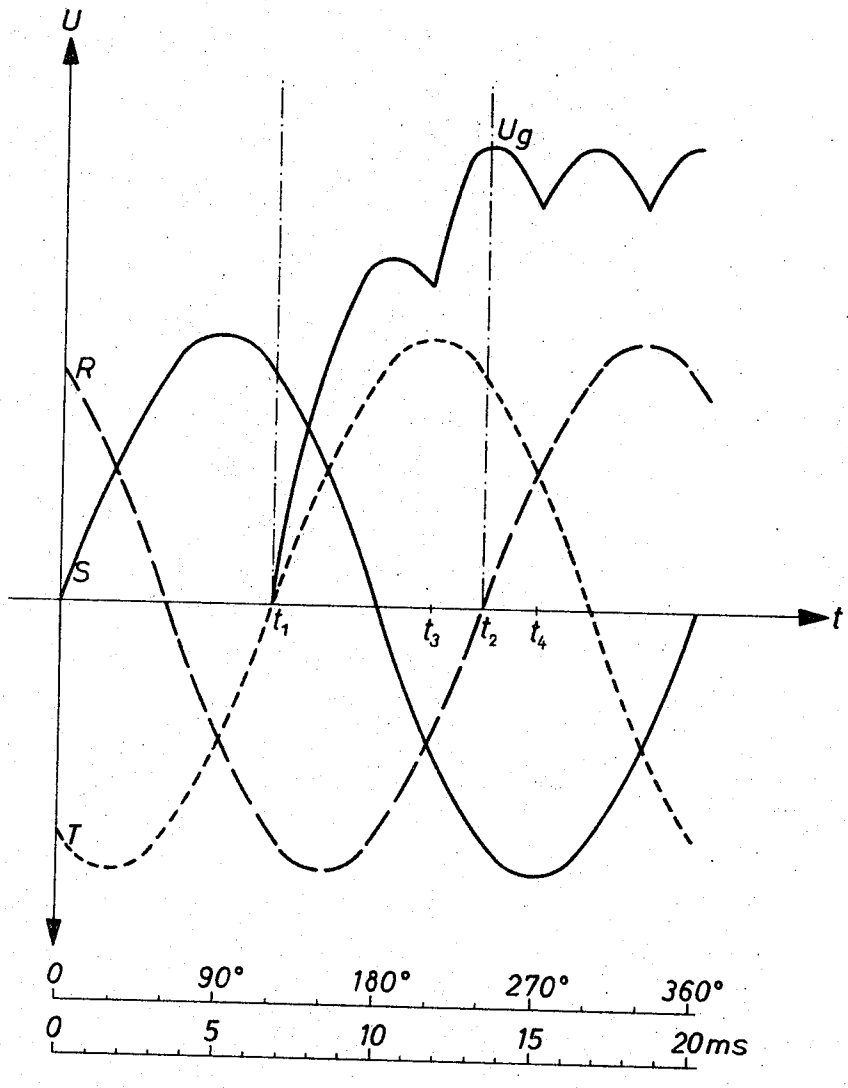

Fig.4

INVENTOR.
HEINZ MESTER
BY
Frank R. Trifari
AGENT

United States Patent Office 3,366,837
Patented Jan. 30, 1968

3,366,837

SURGE SUPPRESSION APPARATUS FOR POLYPHASE HIGH VOLTAGE SYSTEM

Heinz Mester, Hamburg-Fuhlsbuttel, Germany, assignor to North American Philips Company, Inc., New York, N.Y., a corporation of Delaware

Filed July 27, 1964, Ser. No. 385,317
Claims priority, application Germany, Aug. 29, 1963, M 53,004
11 Claims. (Cl. 317—11)

This invention relates to a circuit arrangement for energizing a load device which includes a bridge rectifier circuit from a polyphase source of alternating current. More particularly, to a circuit arrangement for switching a three phase alternating current source to the primary windings of a three phase transformer for supplying the high voltage anode potential to an X-ray tube wherein said circuit arrangement includes means for damping the voltage surges which may occur at the instant the source is connected to the load. The voltage surges may be damped by an increased resistance. The increase in resistance is removed shortly after the load is connected to the AC source and from that instant on the full voltage is set up across the primary winding of the high-voltage transformer. Such circuit arrangements are known. In the case where the load comprises the high voltage transformer of an X-ray system, it is especially important to prevent voltage surges which may have an appreciably higher value than the normal high voltage because the said voltages may damage the X-ray tube. In addition, the voltage surges may adversely affect measurements performed in operating such apparatus, for example, by means of automatic exposure meters.

In order to avoid excess voltages, the high-voltage transformer has hitherto been connected to the supply lines through three damping resistors which precede the primary winding of the high-voltage transformer and carry the primary current when the high-voltage transformer is connected to the supply lines by the relevant relay. In the known circuit arrangement, shortly after the primary circuit of the transformer is closed, the resistors are short-circuited by means of a second relay energized with a suitable time delay. The delay time generally lies between 3 and 10 msec. and preferably does not exceed 3 msec. An important feature design consideration is satisfactory reproducibility of the said energizing delay. Hence the second relay will have to be of light construction with a small moving mass. When the resistors have been short-circuited, the full supply voltage is applied to the primary winding of the high-voltage transformer, so that the secondary voltage then becomes operative substantially without the occurrence of any surge phenomena.

Many of the problems which occur when the high-voltage generator of an X-ray apparatus is switched on may be reduced by the use of what is referred to as synchronous starting, which means that the primary circuit is closed at a given instant of time which is always the same with respect to the passage through zero of the phase voltages. In a synchronous start circuit, a control pulse for actuating the main relay which connects the primary of a transformer to the supply terminals is derived from one of the supply phases, for example, when the phase voltage passes through zero. In the usual apparatus for synchronous starting, for example, each passage through zero of the respective phase may produce a control pulse so that the available synchronizing instant is repeated every 180 electrical degrees.

It is an object of an invention to provide an improved circuit arrangement of the afore-mentioned kind, in which the three supply phases are simultaneously applied to the

primary winding of the high-voltage transformer at an instant coinciding with the passage through zero of one of the phase voltages. According to the invention, a resistor is included in one of the conductors connecting the primary winding to the supply lines. More particularly, the resistor is connected in the conductor in which the voltage lags by 120° with respect to the voltage in that one of the two other conductors in which the said voltage is zero and at the instant the pulse is delivered which actuates the switch which connects the transformer to the supply lines. The switch then short-circuits the resistor after a short period of time. The correct instant for short-circuiting the resistor is when the phase including the damping resistor begins to take part in producing the rectified voltage.

Since only a single damping resistor is used, in the case where a separate relay for short-circuiting the resistor is provided, it now will be sufficient to employ a relay which has only one work contact and hence is of lighter construction and greater reliability. The operation of the relay does not provide difficulty. The main relay may be provided with an auxiliary contact with delayed operation.

In another embodiment of a circuit arrangement in accordance with the invention, the synchronous relay is provided with a delayed operation fourth working contact (auxiliary contact) which is closed approximately 3 msec. to 7 msec. after the other work contacts at which time the voltage of the phase including the damping resistor is applied directly to the associated primary winding of the high-voltage transformer. Thus, an auxiliary relay is no longer required and at the same time it is not very difficult to adjust the auxiliary contact of the synchronous relay so that the aforementioned switching times are achieved.

In order that the invention may readily be carried into effect, two embodiments thereof will now be described, by way of example, with reference to the accompanying diagrammatic drawings in which:

FIGURE 1 is a prior art circuit arrangement including three damping resistors and an auxiliary relay having three work contacts;

FIGURE 2 shows an embodiment of the invention having only a single damping resistor included in one of the three supply phases;

FIGURE 3 is a modified embodiment of the invention which eliminates the auxiliary relay; and

FIGURE 4 is a voltage diagram illustrating the operation of a circuit arrangement in accordance with the invention.

FIGURE 1 shows the afore-mentioned known circuit arrangement in which a high-voltage transformer **1**, comprising three delta-connected primary windings **2**, **3** and **4** and three star-connected secondary windings **5**, **6** and **7** supplies a bridge rectifier circuit **8** which supplies the required operating current to an X-ray tube **9**. The three primary windings are supplied from the three-phase supply lines, the phases of which are denoted in the usual manner by R, S and T. A main contactor having an energizing winding **10** and three work contacts **11**, **12** and **13** serves to switch the electric current into the circuit. Each of the supply conductors to the individual primary windings includes a damping resistor **14**, **15** and **16**, respectively. These resistors may be short-circuited by the work contacts **17**, **18** and **19** of an auxiliary relay **20**. The arrangement operates so that the closure of the work contact of the main contactor **10** is followed, with a predetermined delay time of from 3 to 10 msec., by the closure of the contacts of the auxiliary relay **20**. Hence the primary windings **2**, **3** and **4** of the transformer **1** are first connected to the supply in series with the damping resistors **14**, **15** and **16**. Subsequently, upon termination of

the delay time of the auxiliary relay **20**, when the damping resistors have been short-circuited, the primary windings are directly connected to the supply whereupon the full operating voltage is applied to the transformer **1**, and hence the full operating voltage is applied to the load.

A circuit arrangement in accordance with the invention is shown in FIGURE 2. It is assumed that for starting purposes a relay contactor **10** is used in which the three supply phases are applied to the primary windings of the high-voltage transformer **1** at the instant at which one of the phase voltages passes through zero. For energizing the winding **10** use is made of a known synchronous start circuit arrangement **25** not shown in detail, which supplies current to the main contactor **10** in accordance with the passage through zero of one of the phase voltages. A synchronous start circuit of the type which can be easily adapted for use with the invention is described in U.S. Patent 3,119,932.

In the embodiment shown, only the phase R includes a damping resistor **21**, which is adapted to be short-circuited by the work contact **22** of an auxiliary relay **23**. The voltage is applied to the relay **23** throgh an auxiliary contact **24** of the main contactor **10** at an instant which, with due regard to the response time of the auxiliary relay **23**, is chosen so that the condition stated in the preamble is satisfied. Accordingly, the damping resistor **21** is connected in the supply phase in which the voltage lags by 120° with respect to the phase which passes through zero at the instant at which the main contactor completes the circuit, that is to say, in the phase in which the maximum voltage is occurring at the instant the main contactor closes the circuit.

FIGURE 4 is a voltage diagram illustrating the operation of the said circuit arrangement. The three phase voltages of the three-phase supply are designated by R, S and T, and may readily be distinguished from one another because the variation of one voltage is shown by a full line, that of the second by a dash line and that of the third by a dotted line. The instant at which the main contactor **10** closes the circuit is characterized by the passage through zero of the phase voltage T at the instant t_1 and hence the rectified voltage U_g commences to rise at this instant. However, it does not reach its ultimate amplitude because this is prevented by the damping resistor **21** which, for the Y-connection shown, amounts to putting a resistance in series with two series connected voltage sources, i.e., phase lines R and S. The initial current flow in the circuit is thereby limited. The system is arranged so that 120 electrical degrees after time t_1, i.e. at time t_2, the work contact **22** of the auxiliary relay **23** is closed, which for the time being produces no effort because the rectified voltage has already reached its maximum value. This is due to the fact that beginning with the instant t_3 the phase voltage R no longer takes part in the production of the direct voltage and only becomes effective again at the instant t_4. However, since the damping resistor **21** has in the meantime been short-circuited (at time t_2), the full direct voltage U_g is now available.

This provides the further advantage that generally the precise switching time of the contact **22** short-circuiting the resistor **21** is not critical because at the time the contact **22** is closed the relevant phase voltage is not taking part in the production of the direct voltage. Hence, the switching time tolerances, which in the known circuit arrangement including three resistors must be carefully taken into account because the voltage continues to fall until the resistors are short-circuited, are not critical in the circuit arrangement in accordance with the invention. Consequently, the circuit arrangement in accordance with the invention provides a better reproducibility of the conditions.

FIGURE 3 shows a modified embodiment of the circuit arrangement shown in FIGURE 2. In this modified embodiment the auxiliary relay **23** is omitted and the damping resistor **21** is short-circuited by an auxiliary contact **24** of the main contactor **10**. The only requirement is that the auxiliary contact must be mechanically adjusted to operate with a suitable time delay, that is to say, so that it short-circuits the damping resistor **21** approximately 3 msec. to 7 msec. after the main contacts of the contactor **10** have been closed.

It should be noted that the invention is not to be restricted to the particular embodiments described. For example, the electromagnetic relays used in the said embodiments may be replaced by suitable gas-discharge tubes with due modification of the circuit arrangement. various other modification may be made without departing from the spirit and scope of the invention as defined in the appended claims.

What is claimed is:

1. Apparatus for connecting a polyphase source of alternating current to a load device which includes current rectifier means comprising, input circuit means connected to said source and including an input leg for each phase of said current source, an impedance element in a given one of said legs connected to a first phase of said source, switching means connected to a second phase of said source and having a circuit-breaking contact in each input leg of said input circuit means and a circuit-breaking contact connected in parallel with said impedance element, said switching means includng means responsive to a given condition of said second phase of the current source for closing said circuit-breaking contacts in each of said input legs at a given instant of time relative thereto and for closing said parallel connected contact a predetermined period of time subsequent thereto thereby to short-circuit said impedance element.

2. Apparatus as described in claim **1** wherein said switching means comprises first and second relays, said first relay comprising an energizing winding which simultaneously actuates the contacts in each of said input legs, said second relay comprising an energizing winding which actuates said parallel connected contact, means connecting said second relay winding to a given phase of said current source, said first relay comprising a further circuit-breaking contact connected in series with said second relay winding.

3. Apparatus as described in claim **1** wherein said switching means comprises relay means having a winding for actuating all of said circuit-breaking contacts, said relay means being arranged so that the actuation of said parallel connected contact is delayed for a given time subsequent to the actuation of said contacts in said input legs.

4. Apparatus as described in claim **1** wherein said switching means is arranged to simultaneously close the contacts in said input legs at the time the phase voltage in said second phase passes through zero.

5. Apparatus for connecting a three phase source of alternating current having an output conductor for each phase to a load device of the type which includes current rectifier means comprising, an impedance element connected in a first one of said output conductors, switching means having a circuit-breaking contact in each of said output conductors and a circuit-breaking contact connected in parallel with said impedance element, synchronous control means connected to a second phase of said current source and arranged to actuate said switching means at a predetermined instant of time in the alternating current cycle of said second phase to close said contacts in each of said output conductors, said switching means further comprising delay means for closing said parallel connected contact a predetermined time after said output conductor contacts are closed thereby to short-circuit said impedance element.

6. Apparatus as described in claim **5** wherein said synchronous control means actuates said switching means at the time said phase voltage in said second phase passes through zero and wherein said impedance element is connected in that output conductor which is connected to the

phase of the current source which lags said second phase by 120 degrees.

7. Apparatus as described in claim 5 wherein the frequency of said current source is in the range of 50 to 60 cycles per second and wherein said delay means is arranged to close said parallel connected contact approximately 120 electrical degrees, at said source frequency, after said predetermined instant of time in the cycle of said second phase.

8. Apparatus as described in claim 6 wherein said synchronous control means includes means for producing a voltage pulse at the time the voltage in said second phase passes through zero, and means for applying said voltage pulse to actuate said switching means.

9. Apparatus as described in claim 6 wherein said load device comprises a three phase high voltage transformer having primary and secondary windings and an X-ray tube having an anode and cathode, a bridge rectifier circuit interconnecting said secondary winding with the anode and cathode of said X-ray tube, and means connecting said primary windings to the output conductors.

10. Apparatus as described in claim 6 wherein said switching means comprises a relay having a winding for

actuating said contacts and means connecting said winding to said synchronous control means, said relay further including means for delaying the actuation of said parallel connected contact for a given time subsequent to the actuation of said contacts in said output conductors.

11. Apparatus as described in claim 6 wherein said switching means comprises first and second relays, said first relay comprising an energizing winding which simultaneously actuates the contacts in each of said output conductors, said second relay comprising an energizing winding which actuates said parallel connected contact, means connecting said second relay winding to a given phase of said current source, said first relay comprising a further circuit-breaking contact connected in series with said second relay winding.

References Cited

UNITED STATES PATENTS

1,621,011 3/1927 Harvey et al. ---------- 317—20

MILTON O. HIRSHFIELD, *Primary Examiner.*

R. V. LUPO, *Assistant Examiner.*