(12) INTERNATIONAL APPLICATION PUBLISHED UNDER THE PATENT COOPERATION TREATY (PCT)

(19) World Intellectual Property Organization
International Bureau

(43) International Publication Date
03 September 2020 (03.09.2020)

WIPO | PCT

(10) International Publication Number
WO 2020/173722 A1

(51) International Patent Classification:
A47J 31/41 (2006.01) *A47J 31/56* (2006.01)

(21) International Application Number:
PCT/EP2020/053921

(22) International Filing Date:
14 February 2020 (14.02.2020)

(25) Filing Language: English

(26) Publication Language: English

(30) Priority Data:
19159156.9 25 February 2019 (25.02.2019) EP

(71) Applicant: **SOCIÉTÉ DES PRODUITS NESTLÉ S.A.** [CH/CH]; Avenue Nestlé 55, 1800 VEVEY (CH).

(72) Inventors: **PAILLARD, Olivier**; 6 rue des Viscernois, 25370 Métabief (FR). **MIEVILLE, Yann**; chemin de la Laiterie 1, 1405 POMY (CH). **FERRAND, Mickael**; Praz Simon 6, 1807 Blonay (CH). **BOILEAU, Vincent**; 3A, Avenue Soguel, 2035 Corcelles (CH). **RAWYLER, Fabien**; Route de Domdidier 8, 1566 Saint-Aubin (CH).

(74) Agent: **DUCREUX, Marie**; Société des Produits Nestlé S.A., Avenue Nestlé 55, 1800 VEVEY (CH).

(81) Designated States *(unless otherwise indicated, for every kind of national protection available)*: AE, AG, AL, AM, AO, AT, AU, AZ, BA, BB, BG, BH, BN, BR, BW, BY, BZ, CA, CH, CL, CN, CO, CR, CU, CZ, DE, DJ, DK, DM, DO, DZ, EC, EE, EG, ES, FI, GB, GD, GE, GH, GM, GT, HN, HR, HU, ID, IL, IN, IR, IS, JO, JP, KE, KG, KH, KN, KP, KR, KW, KZ, LA, LC, LK, LR, LS, LU, LY, MA, MD, ME, MG, MK, MN, MW, MX, MY, MZ, NA, NG, NI, NO, NZ, OM, PA, PE, PG, PH, PL, PT, QA, RO, RS, RU, RW, SA, SC, SD, SE, SG, SK, SL, ST, SV, SY, TH, TJ, TM, TN, TR, TT, TZ, UA, UG, US, UZ, VC, VN, WS, ZA, ZM, ZW.

(84) Designated States *(unless otherwise indicated, for every kind of regional protection available)*: ARIPO (BW, GH, GM, KE, LR, LS, MW, MZ, NA, RW, SD, SL, ST, SZ, TZ, UG, ZM, ZW), Eurasian (AM, AZ, BY, KG, KZ, RU, TJ, TM), European (AL, AT, BE, BG, CH, CY, CZ, DE, DK, EE, ES, FI, FR, GB, GR, HR, HU, IE, IS, IT, LT, LU, LV, MC, MK, MT, NL, NO, PL, PT, RO, RS, SE, SI, SK, SM,

(54) Title: COLD BEVERAGE DISPENSING SYSTEM

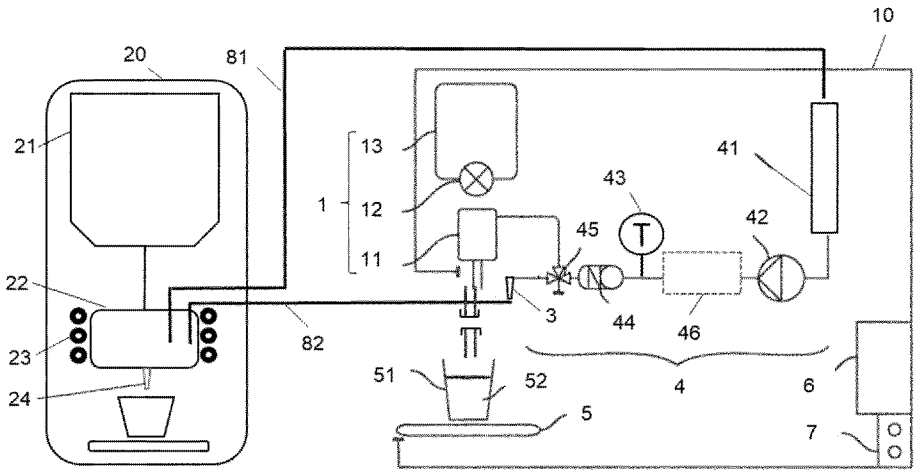

FIGURE 1

(57) Abstract: The invention concerns a system of a beverage preparation machine and a cold water dispenser, wherein the beverage preparation machine comprises a beverage preparation module and a fluid system comprising: a water supply, a pump, a three-way valve configured to dispense pumped water either to the beverage preparation module or to a water dispensing outlet and a temperature sensor to measure the temperature of pumped water, and wherein the cold water dispenser comprises a water supply, a water tank and a cooling device configured to cool said water tank, and wherein the water tank of the cold water dispenser is connected to the water supply of the beverage preparation machine and to the water dispensing outlet of the beverage preparation machine, and wherein the beverage preparation machine comprises a control system configured to control the three-way valve and the pump.

WO 2020/173722 A1

[Continued on next page]

TR), OAPI (BF, BJ, CF, CG, CI, CM, GA, GN, GQ, GW, KM, ML, MR, NE, SN, TD, TG).

Declarations under Rule 4.17:

— *as to applicant's entitlement to apply for and be granted a patent (Rule 4.17(ii))*
— *as to the applicant's entitlement to claim the priority of the earlier application (Rule 4.17(iii))*
— *of inventorship (Rule 4.17(iv))*

Published:

— *with international search report (Art. 21(3))*

COLD BEVERAGE DISPENSING SYSTEM

Field of the invention

The present invention relates to beverage dispensers preparing cold beverages from a beverage ingredient and cold water.

Background of the invention

Beverage dispensers preparing cold beverages are known from the prior art. These dispensers usually comprise a cold water production fluid system treating water and delivering cold water to a device configured for receiving cold water and a beverage ingredient and for preparing a beverage therefrom (mixing chamber, brewing chamber, capsule cage or holder, ...).

One problem of some existing cold beverage dispensers is that the time for starting the dispenser and having cold water at the right temperature is generally long because they require the preparation of an ice bank. For example, generation of an ice bank requires at least three hours.

Another problem of some other existing dispensers is that that they do not enable the dispensing of a high number of cold beverages in a short dispensing time, in particular when the dispensers do not comprise a cold water reservoir like dispensers using ice bank or cooling technologies. With these dispensers the last beverages of a series of ordered beverages are less cold than the first beverages.

Even in dispensers comprising cold water reservoir, due to the length of the fluid line from the cold tank to the beverage preparation module, the first cup preparation after long stand-by time is warmer than the following ones due to residual water remaining in the fluid line at ambient temperature

In addition, the integration of a cold water production fluid system inside a beverage dispenser is extremely costly.

A simple and common alternative solution to provide cold beverages consists in producing hot beverages with existing hot beverage dispensers and in adding pieces of ice that rapidly melt and cool the beverages inside the drinking cup.

A drawback of this solution is due to the need for an ice maker close to the beverage dispenser. In addition this kind of preparation affects the quality of the beverage because the final addition of ice provides a watery taste to the final beverage.

There is a need for improving the preparation of cold beverages with beverage dispensers.

Summary of the invention

In a first aspect of the invention, there is provided a system of a beverage preparation machine and a cold water dispenser,

wherein the beverage preparation machine comprises :

- at least one beverage preparation module configured to mix water with a beverage ingredient,
- a fluid system configured to supply water to the beverage preparation module, said fluid system comprising :
  - . a water supply,
  - . a pump for pumping water from the water supply,
  - . at least one three-way valve configured to dispense pumped water either to the beverage preparation module or to a water dispensing outlet,
  - . a temperature sensor to measure the temperature of pumped water,

and

wherein the cold water dispenser comprises a tank of cold water,

and

wherein said tank of the cold water dispenser is connected :

- to the water supply of the beverage preparation machine through a first fluid line, and
- to the water dispensing outlet of the beverage preparation machine through a second fluid line,

and wherein the beverage preparation machine comprises a control system configured to control the three-way valve and the pump of the beverage preparation machine,

and wherein :

- in a stand-by mode, if the temperature of water measured by the temperature sensor is above a pre-determined maximum temperature T_{Max}, said control comprises controlling the three-way valve to dispense water to the water dispensing outlet and controlling the pump to recirculate water until the temperature is less than T_{Max},
- in a dispensing mode :
  - . if the temperature of water measured by the temperature sensor is above a pre-determined dispensing temperature $T_{Dispensing}$, said control comprises controlling the three-way valve to dispense water to the water dispensing outlet and controlling the pump to recirculate water until the temperature is less than $T_{Dispensing}$,
  - . if the temperature of water measured by the temperature sensor is inferior or equal to said pre-determined dispensing temperature $T_{Dispensing}$, said control comprises controlling the three-way valve to dispense water to the water preparation module and controlling the pump to prepare the beverage.

The system for preparing cold beverages comprises two apparatuses fluidly connected one to the other. The first apparatus is a beverage preparation machine and the second apparatus is a cold water dispenser.

The advantage of the system is that current existing apparatuses can be used and connected one to the other to enable the preparation of cold beverages by the control of the water fluid system of the beverage preparation machine.

The beverage preparation machine comprises a beverage preparation module enabling mixing of water with a beverage ingredient in order to prepare a beverage.

In one first embodiment, this beverage preparation module is a mixing chamber configured to mix water and a soluble beverage ingredient. Preferably the mixing chamber is configured for receiving and mixing water and at least one soluble beverage ingredient and for dispensing the resulting mixture. Such a chamber can be configured as described in WO 2008/071613 to obtain efficient mixing.

Usually this beverage preparation module comprises a dosing device configured for dispensing a dose of soluble beverage ingredient stored in a reservoir to the chamber. Generally the dosing device is placed above the chamber in order to feed it by gravity fall. The dosing device can be associated to a powder reservoir or a liquid concentrate reservoir.

In a variant, the apparatus can be devoid of dosing device and beverage ingredient reservoir. Then, beverage ingredient can be introduced in the chamber manually.

In one second embodiment, this beverage preparation module comprises a capsule extraction unit operable to receive and process a capsule comprising a beverage ingredient.

The beverage preparation machine can comprise several beverage preparation modules. The modules can differ by the nature of beverage prepared therefrom (e.g. coffee and milk requiring different mixing chamber designs) and/or from the type of preparation (mixing chamber and capsule extraction).

The beverage preparation machine comprises a fluid system configured to supply water to the beverage preparation module. This fluid system comprises a supply of water, generally a connection to a water pipe, and a pump for pumping water from this supply.

Downstream the pump, the fluid system comprises at least one three-way valve to control the dispensing of pumped water either to the beverage preparation module linked to one first outlet of the valve or to a water dispensing outlet linked to one second outlet of the valve. This water dispensing outlet can be a simple spout or a nozzle dispensing water to the dispensing area of the beverage preparation machine where a drinking container can be positioned to receive the beverage preparation or water, such as described in WO 2009/144219.

The beverage preparation machine can comprise several beverage preparation modules and several three-way valves, each three-way valve being configured to dispense pumped water to one dedicated beverage preparation module, and these three-way valves being connected in series.

In addition, the fluid system comprises a temperature sensor to measure the temperature of pumped water, usually positioned upstream the three-way valve, preferably between the pump and the three-way valve.

If the beverage preparation machine comprises several three-way valves being connected in series, then the temperature sensor is positioned upstream the first upper three-way valve.

The cold water dispenser comprises at least a tank of cold water.

Preferably, the cold water dispenser comprises a water supply connected to the cold water tank and a cooling device configured to cool the cold water tank.

This water supply can be a water bottle or even tap water. Tap water is preferably treated by filtering and/or UV for hygiene safety. This water supply is connected to the water tank in order to fill this tank with water. Filling can be implemented through gravity or with a pump.

Usually the water supply and the water tank are configured so that the water tank is refilled as soon as water is dispensed therefrom. Depending on the type of dispenser, the water tank can comprise a level sensor to determine the water level inside the tank and the controller of the cold water dispenser can be configured to supply water to the tank based on the value measured by the level sensor.

The cooling device is configured to cool the water tank, and water hold inside.

Preferably, the cold water dispenser comprises a control system to control the cooling device in order to maintain the temperature of water inside the water tank at a temperature less than $T_{Dispensing}$.

Generally, the cold water dispenser comprises a cold water dispensing line to dispense cold water from the water tank. This dispensing line usually comprises a spout or tap and optionally a pump depending on the type of cold dispenser.

In the system, the fluid system of the beverage preparation machine and the water tank of the cold water dispenser are connected together through fluid lines in order to create a closed circuit for water.

Preferably, the water tank of the cold water dispenser is connected to the water supply of the beverage preparation machine through a first fluid line and the water tank of the cold water dispenser is connected to the water dispensing outlet of the beverage preparation machine through a second fluid line.

The beverage preparation machine comprises a control system configured to control the at least one three-way valve and the pump of said machine as follows.

In a stand-by mode of the beverage preparation machine – that is a mode where no beverage is ordered by a consumer - if the temperature of water measured by the temperature sensor is above a pre-determined maximum temperature T_{Max}, then the control system controls the three-way valve to dispense water to the water dispensing outlet, that is to the water tank of the cold beverage dispenser, and the control system controls the pump to recirculate water between the beverage preparation machine and the cold water dispenser until the temperature of water measured by the temperature sensor is less than T_{Max}.

This pre-determined maximum temperature T_{Max} is set as the temperature the water can reach inside the beverage preparation machine and from which it is possible to rapidly cool the water by establishing a recirculation of the water in order to reach a pre-determined dispensing temperature $T_{Dispensing}$ at which the beverage can be prepared. The pre-determination of this temperature T_{Max} can depend on the length of the recirculation loop of water, on the estimated pre-cooling time the consumer can accept, on the insulation of the fluid lines and/or the ambient temperature.

As a result, this setting of the system avoids that the consumer waits too much for the preparation of a cup after a long non-dispensing time by the machine.

Preferably, in this stand-by mode, the control system controls the pump to recirculate water between the beverage preparation machine and the cold water dispenser until the temperature of water measured by the temperature sensor is equal or inferior to $T_{Dispensing}$.

In a dispensing mode of the beverage preparation machine – that is a mode where a beverage is ordered by a consumer :

. if the temperature of water measured by the temperature sensor is above the pre-determined dispensing temperature $T_{Dispensing}$, then the system control controls the three-way valve to dispense water to the water dispensing outlet and controls the pump to recirculate water until the temperature is less than $T_{Dispensing}$, and

. if the temperature of water measured by the temperature sensor is equal or below this pre-determined dispensing temperature $T_{Dispensing}$, then the system control controls the three-way valve to dispense water to the water preparation module and controls the pump to prepare the beverage.

This pre-determined dispensing temperature $T_{Dispensing}$ is defined as the maximal temperature of water that can be used to prepare a cold beverage with the beverage preparation machine. This temperature can depend on the type of beverage preparation module of the

machine and/or on the type of beverage ingredient used for the preparation and/or on the in-cup temperature desired for the final beverage.
As a result, beverage is prepared with water presenting the right cold temperature only and there is no difference of temperature between the first prepared beverage and the following prepared beverages.

Generally, the cold water dispenser comprises a control system to control the cooling device in order to maintain the temperature of water inside the water tank at a temperature that is less than the pre-determined dispensing temperature $T_{Dispensing}$.

The above aspects of the invention may be combined in any suitable combination. Moreover, various features herein may be combined with one or more of the above aspects to provide combinations other than those specifically illustrated and described. Further objects and advantageous features of the invention will be apparent from the claims, from the detailed description, and annexed drawings.

Brief description of the drawings

The characteristics and advantages of the invention will be better understood in relation to the following figures :

- Figure 1 is a schematic drawing of a system according to the invention,
- Figure 2 shows a block diagram of a control system of the beverage preparation apparatus within the system of Figure 1,
- Figure 3 shows the connection of three-way valves in a beverage preparation machine comprising several beverage preparation modules.

Detailed description of the drawings

Figure 1 is a schematic drawing of a system comprising a beverage preparation machine 10 and a cold water dispenser 20. The machine 10 and the dispenser 20 are machines known from the prior art.

The beverage preparation machine 10 prepares beverages from a beverage preparation module 1. In the illustrated embodiment, this module 1 prepares a beverage by dissolution of a dose of soluble beverage ingredient in a mixing chamber 11. The beverage ingredient is stored in a reservoir 13. This beverage ingredient can be a soluble powder like instant soluble coffee, milk powder, instant tea, chocolate powder or alternatively the soluble ingredient can be a liquid concentrate like coffee, milk or tea concentrate or a syrup. The

dose of beverage ingredient is metered and dispensed by a dosing device 12. This dosing device can comprise a rotating disc such as described in WO 2009/144239 or a dosing drawer such as described in WO 2019/016149.

The dosing device 12 dispenses the dose of beverage ingredient in the mixing chamber 11, generally by gravity fall in a top opening of the chamber. This dosing device is actuated by a motor.

The mixing chamber comprises :

- a water inlet for the introduction of water in order to dissolve the beverage powder, and
- a beverage outlet for dispensing the beverage in a drinking container 51 placed in a beverage dispensing area 5 of the machine. Generally the beverage outlet is at the bottom of the chamber.

In an alternative embodiment, not illustrated, the beverage preparation module 1 can be a capsule extraction unit operable to receive and process a capsule comprising a beverage ingredient. The extraction unit typically comprises a capsule holder and a water injection head. The capsule holder can be operable to receive a capsule and to move between a capsule receiving position, a capsule extraction position and a capsule ejection position. The movement can be manual or fully automatic.

In one embodiment, the beverage preparation machine can comprise several beverage preparation modules. The modules can differ by the nature of the beverage prepared therefrom (e.g. a mixing chamber designed for coffee preparation and a mixing chamber designed for milk preparation) and/or from the type of preparation (e.g. a mixing chamber for bulk soluble beverage powder and a capsule extraction unit).

The machine includes a water dispensing outlet 3, that is usually used to dispense water only in a drinking container 51 or that can present the form of nozzle with the function of frothing the beverage 52 present in the drinking container 51, as described in WO 2009/144219.

A water supplying system 4 is provided in the machine in order to feed water in the water dispensing outlet 3 or in the beverage preparation module 1.

The water supplying system comprises :

- a water inlet 41,
- a water pump 42 for pumping water from the inlet 41. The pump can be any type of pump such as a piston pump, a diaphragm pump.
- a temperature sensor 43 to measure the temperature of pumped water,

- preferably, a non-return valve 44, that prevents introduction of air in the fluid system and the dripping of water when the pump is not actuated,
- a three-way valve 45 diverting water either to the water dispensing outlet 3 or to the beverage reparation module 1. This valve is usually a solenoid valve actuated by a motor and is commanded by the control system 6 of the machine 10. In the preferred embodiment, the valve is preferably a three-way solenoid valve feeding water to the beverage preparation unit 1 when not energised and feeding water to the water dispensing outlet 3 when energized. Alternatively, other types of valve can be used like a pinch valve.

The temperature sensor 43 is generally positioned upstream the three-way valve 45 to control the temperature of water dispensed downstream the valve.

If the beverage preparation machine comprises several beverage preparation modules, the beverage preparation machine comprises several three-way valves 45, each valve being dedicated to one beverage preparation module 1. Preferably, the three-way valves are connected in series, the first outlet 451 being connected to the dedicated beverage preparation module 1 and the second outlet 452 being connected to a downstream three-way valve 45, the last valve having its second outlet 452 connected to the water dispensing outlet 3, as illustrated schematically in **Figure 3**.

The cold water dispenser 20 is configured for dispensing cold water. This dispenser comprises a tank 22 of cold water, for example a buffer tank enabling the immediate dispensing of cold water.

In the preferred embodiment, the cold water dispenser is a water fountain that cools water supplied from a water supply 21, for example a bottle of water that can be plugged and removed when empty, or alternatively, this water supply can be tap water. The water supply 21 is connected to the water tank 22 in which water is cooled by a cooling device 23 cooperating with the water tank. For example, the cooling device can be a tube coiled around the tank and circulating a refrigerant fluid provided by a cold generation unit (not illustrated).

The water tank 22 is provided with a spout 24 to dispense cold water in a drinking container, in a separate manner from the beverage preparation machine.

The system is not limited to the use of the illustrated cold water dispenser. Alternatively, any water fountain comprising a cold water tank can be used whatever the supply water (bottle or tap), and whatever the supply of water to the cold tank (gravity or pump) and the supply of water from the cold tank to the spout (gravity or pump).

In the system, the machines 10, 20 are assembled together through fluid lines 81, 82 as follows :

- a first fluid line 81 connects the water tank 22 of the cold water dispenser to the water inlet 41 of the beverage preparation machine through, and
- a second fluid line 82 connects the water dispensing outlet 3 of the beverage preparation machine to the water tank 22 of the cold water dispenser.

As a result, these fluid lines create a single water circulation system for the beverage preparation machine 10 and the cold water dispenser 20.

Connections can be realised by a simple attachment of tubes at the inlet and the outlet of the beverage preparation machine and by diving tubes inside the water tank 22.

With reference to **Figures 1 and 2**, the control system of the beverage preparation apparatus will now be considered : the control system 6 is operable to control the components of the beverage preparation machine to prepare a beverage. The control system 6 typically comprises : a user interface 7, a processing unit 61, the temperature sensor 43, a power supply 62, a memory 63.

The user interface 7 comprises hardware to enable a user to interface with the processing unit 61, by means of user interface signal. More particularly, the user interface receives commands from a user, the user interface signal transfers the said commands to the processing unit 61 as an input. For example, the commands may be information about the selection of the beverage to be prepared. The processing unit 61 may also output information to the user interface 7.

The temperature sensor 43 is operable to provide an input signal to the processing unit 61 for monitoring of the beverage preparation process. The input signal can be an analogue or digital signal.

The processing unit 61 comprises memory, input and output system components arranged as an integrated circuit, typically as a microprocessor or a microcontroller. The processing unit 18 may comprises other suitable integrated circuits, such as : an ASIC, a programmable logic device such as a PAL, CPLD, FPGA, PSoC, a system on a chip (SoC), an analogue integrated circuit, such as a controller. For such devices, where appropriate, the aforementioned program code can be considered programed logic or to additionally comprise programmed logic. The processing unit 61 may also comprise one or more of the aforementioned integrated circuits.

The processing unit 61 generally comprises a memory unit 63 for storage of instructions as program code and optionally data. To this end the memory unit typically comprises : a non-volatile memory e.g. EPROM, EEPROM or Flash for the storage of program code and operating parameters as instructions, volatile memory (RAM) for temporary data storage. The memory unit may comprise separate and/or integrated (e.g. on a die of the semiconductor) memory. For programmable logic devices the instructions can be stored as programmed logic.

The instructions stored on the memory unit 63 can be idealised as comprising a beverage preparation program. The program can be executed by the processing unit 61 in response to the said input such as the commands from the user interface 7 and/or the signal of the temperature sensor 43. Execution of the program causes the processing unit 61 to control the following components : the pump 42 and the three-way valve 45.

The processing unit 61 is operable to :
- receive an input, i.e. the commands from the user interface 7 and/or the signal of the temperature sensor 43,
- process the input according to the program code (or programmed logic) stored on the memory unit 63,
- provide an output, which is the beverage preparation process or the circulation of water. More specifically the output comprises the operation of at least the pump 42 and the three-way valve 45.

A part of the program is based on a beverage recipe that can relate to a ratio of beverage ingredient to water, a time sequence for the introduction of water and/or the beverage ingredient and/or a power level of the pump .

In particular, due to the connection of the cold water dispenser to the beverage preparation machine, the control system of the beverage preparation machine is configured to control the three-way valve 45 and the pump 42 to provide cold water to the beverage preparation module 1. The control enables the provision of cold water at the desired temperature for beverage preparation in a short time and for the successive preparations of beverages.
When the beverage preparation machine 10 is in the stand-by mode, that is waiting for a consumer to order a beverage, the temperature of water inside the fluid system 4 is continuously or regularly measured by the temperature sensor 43. If this temperature rises above a pre-determined maximum temperature T_{Max}, the control system controls the three-way valve 45 so that it is able to dispense water to the water dispensing outlet 3 and

simultaneously actuates the pump 42. As a result, water circulates through the water circulation system provided by the second fluid line 82, the cold water tank 22, the first fluid line 81, the water inlet 41, the pump 42, the non-return valve 44, the three-way valve 45 and the water dispensing outlet 3 with the consequence that cold water from the water tank 22 decreases the temperature of water in the circuit. Pumping and recirculation of water happen until the temperature is less than T_{Max}, preferably inferior or equal to $T_{Dispensing}$. Then, the pump is deactivated. If a consumer comes and orders a beverage, this temperature that is less than T_{Max} guarantees that the temperature of water is not too high and that the time to prepare a beverage remains short as developed below.

This maximum temperature T_{Max} is pre-determined as the temperature the water can reach inside the beverage preparation machine and from which it is possible to rapidly cool the water by establishing a recirculation of the water in order to reach the pre-determined dispensing temperature $T_{Dispensing}$. The pre-determination of this temperature T_{Max} can depend on the length of the recirculation loop of water, on the estimated pre-cooling time the consumer can accept, on the insulation of the fluid lines and/or the temperature of the environment.

When the beverage preparation machine 10 is in the dispensing mode, that is having received a dispensing order from a consumer e.g. by means of the user interface 7, the temperature of water inside the fluid system 4 is measured by the temperature sensor 43.

If this measured temperature of water is above a pre-determined dispensing temperature $T_{Dispensing}$, it means this temperature is too high for a beverage preparation and water must be cooled. Then, the control controls the three-way valve 45 so that it is able to dispense water to the water dispensing outlet 3 and simultaneously actuates the pump 42 to recirculate water until the temperature becomes less than $T_{Dispensing}$. Since water inside the circuit presents a temperature inferior to T_{MAX}, the time length for this recirculation is not long. When it happens, then the beverage can be prepared by switching the three-way valve 45 to the position enabling the dispensing of cold water to the beverage preparation module 1 and by controlling the pump to prepare the beverage, for example based on a recipe or sequence of activation stored in the memory unit 63.

Otherwise, if the temperature of water measured by the temperature sensor is under this pre-determined dispensing temperature $T_{Dispensing}$, when the consumer orders a beverage, then the system control immediately controls the three-way valve so that it is able to dispense water to the water preparation module 1 and controls the pump to prepare the beverage.

This pre-determined dispensing temperature $T_{Dispensing}$ is defined as the maximal temperature of water that can be used to prepare a cold beverage with the beverage preparation machine. This temperature can depend on the type of beverage preparation module used

and/or the type of beverage ingredient used and/or on the in-cup temperature desired for the beverage. Usually a temperature $T_{Dispensing}$ of 5°C is preferred.

The temperatures T_{Max} and $T_{Dispensing}$ are pre-determined in order to set the waiting time for the consumer as short as possible once he/she has ordered a beverage. Usually it is estimated that a pre-cooling time of 60 seconds or less is acceptable for a consumer.

The cold water dispenser 20 is configured for dispensing cold water, that is usually water at a temperature less than 5°C, preferably comprised between 3 and 5°C.

The system of the present invention presents the advantage of enabling the preparation of cold beverages with already existing machines like a cold water fountain and a hot beverages preparation machine. Actually, Figure 1 illustrates a beverage preparation machine 10 that can comprise a heater 46 (represented in dotted line). Such a machine 10 is common and can be used in the system by simply adapting the control system of the machine, in particular by preventing the actuation of the heater 46, although water circulates therethrough. The advantage of using such an existing machine is that the heater usually comprises a temperature sensor that can be used as the temperature sensor 43 monitoring the temperature of cold water.
The beverage dispenser of the present invention presents the advantage of enabling the use of both machines independently, the control system being kept separated. Specifically, the cold water dispenser can still dispense ambient or cold water from its tap, e.g. by actuation of pump.

Both machines can be supported by a common frame facilitating connection of the first second lines and enabling the consumer to easily position his/her dinking container to the dispensing areas of each machine.

The system enables the preparation of cold beverages in a short time meeting the current expectation of a consumer, for example similar to the waiting time for preparing a hot beverage. This waiting time is short either for the preparation of cold beverage after the absence of use of the machine during a long period or for the successive preparation of several cold beverages.
It has been noticed that the temperature of beverages prepared successively remains identical and at the requested temperature $T_{Dispensing}$.

The system enables the preparation of several successive cold beverages without increase of temperature from one cup to another.

Although the invention has been described with reference to the above illustrated embodiments, it will be appreciated that the invention as claimed is not limited in any way by these illustrated embodiments.

Variations and modifications may be made without departing from the scope of the invention as defined in the claims. Furthermore, where known equivalents exist to specific features, such equivalents are incorporated as if specifically referred in this specification.

As used in this specification, the words "comprises", "comprising", and similar words, are not to be interpreted in an exclusive or exhaustive sense. In other words, they are intended to mean "including, but not limited to".

List of references in the drawings :

beverage preparation machine	10
beverage preparation module	1
mixing chamber	11
dosing device	12
beverage ingredient reservoir	13
water dispensing outlet	3
water supplying system	4
water inlet	41
pump	42
temperature sensor	43
non return valve	44
three-way valve	45
first outlet	451
second outlet	452
heater	46
dispensing area	5
drinking container	51
beverage	52
control system	6
processing unit	61
power supply	62
memory unit	63
user interface	7

cold water dispenser	20
water supply	21
water tank	22
cooling device	23
spout	24
first fluid line	81
second fluid line	82

CLAIMS

1. System of a beverage preparation machine (10) and a cold water dispenser (20),
wherein the beverage preparation machine comprises :
- at least one beverage preparation module (1) configured to mix water with a beverage ingredient,
- a fluid system (4) configured to supply water to the beverage preparation module, said fluid system comprising :
. a water supply (41),
. a pump (42) for pumping water from the water supply,
. at least one three-way valve (45) configured to dispense pumped water either to said beverage preparation module (1) or to a water dispensing outlet (3),
. a temperature sensor (43) to measure the temperature of pumped water,
and
wherein the cold water dispenser comprises a tank (22) of cold water,
and
wherein said tank (22) of the cold water dispenser is connected :
- to the water supply (41) of the beverage preparation machine through a first fluid line (81),
and
- to the water dispensing outlet (3) of the beverage preparation machine through a second fluid line (82),
and wherein the beverage preparation machine (10) comprises a control system (6) configured to control the three-way valve (45) and the pump (42) of said beverage preparation machine and wherein :
- in a stand-by mode, if the temperature of water measured by the temperature sensor is above a pre-determined maximum temperature T_{Max}, said control comprises controlling the three-way valve to dispense water to the water dispensing outlet and controlling the pump to recirculate water until the temperature is less than T_{Max}, preferably equal or inferior to $T_{Dispensing}$,
- in a dispensing mode :
. if the temperature of water measured by the temperature sensor is above a pre-determined dispensing temperature $T_{Dispensing}$, said control comprises controlling the three-way valve to dispense water to the water dispensing outlet and controlling the pump to recirculate water until the temperature is less than $T_{Dispensing}$,
. if the temperature of water measured by the temperature sensor is inferior or equal to said pre-determined dispensing temperature $T_{Dispensing}$, said control comprises controlling

the three-way valve to dispense water to the water preparation module and controlling the pump to prepare the beverage.

2. System according to Claim 1 wherein the beverage preparation module (1) of the beverage preparation machine is a mixing chamber configured to mix water and a soluble beverage ingredient.

3. System according to Claim 1 wherein the beverage preparation module (1) of the beverage preparation machine comprises a capsule extraction unit operable to receive and process a capsule comprising a beverage ingredient.

4. System according to any one of the precedent claims, wherein the beverage preparation machine (10) comprises several beverage preparation modules (1) and several three-way valves (45), each three-way valve being configured to dispense pumped water to one dedicated beverage preparation module (1) and said three-way valve being connected in series.

5. System according to any one of the precedent claims, wherein the cold water dispenser (20) comprises :
- a water supply (21) connected to the cold water tank, and
- a cooling device (23) configured to cool the cold water tank.

6. System according to any one of the precedent claims, wherein the cold water dispenser comprises a control system to control the cooling device in order to maintain the temperature of water inside the water tank at a temperature less than the pre-determined dispensing temperature $T_{Dispensing}$.

7. System according to any one of the precedent claims, wherein, in the stand-by mode, if the temperature of water measured by the temperature sensor is above a pre-determined maximum temperature T_{Max}, said control comprises controlling the three-way valve to dispense water to the water dispensing outlet and controlling the pump to recirculate water until the temperature is equal or inferior to $T_{Dispensing}$,

8. A method of controlling the three-way valve and the pump of the beverage preparation machine of a system according to any one of Claims 1 to 7 wherein :
- in a stand-by mode, if the temperature of water measured by the temperature sensor is above a pre-determined maximum temperature T_{Max}, said control comprises controlling the

three-way valve to dispense water to the water dispensing outlet and controlling the pump to recirculate water until the temperature is less than T_{Max}, preferably equal or inferior to $T_{Dispensing}$,

- in a dispensing mode :

. if the temperature of water measured by the temperature sensor is above a pre-determined dispensing temperature $T_{Dispensing}$, said control comprises controlling the three-way valve to dispense water to the water dispensing outlet and controlling the pump to recirculate water until the temperature is less than $T_{Dispensing}$,

. if the temperature of water measured by the temperature sensor is under this pre-determined dispensing temperature $T_{Dispensing}$, said control comprises controlling the three-way valve to dispense water to the water preparation module and controlling the pump to prepare the beverage.

9. A computer program for a processor of a control system of a beverage preparation machine of a system according to any one of Claims 1 to 7, the computer program comprising program code executable to control the three-way valve and the pump of the beverage preparation machine, wherein said control comprises :

- in a stand-by mode, if the temperature of water measured by the temperature sensor is above a pre-determined maximum temperature T_{Max}, controlling the three-way valve to dispense water to the water dispensing outlet and controlling the pump to recirculate water until the temperature is less than T_{Max}, preferably equal or inferior to $T_{Dispensing}$,

- in a dispensing mode :

. if the temperature of water measured by the temperature sensor is above a pre-determined dispensing temperature $T_{Dispensing}$, controlling the three-way valve to dispense water to the water dispensing outlet and controlling the pump to recirculate water until the temperature is less than $T_{Dispensing}$,

. if the temperature of water measured by the temperature sensor is under this pre-determined dispensing temperature $T_{Dispensing}$, controlling the three-way valve to dispense water to the water preparation module and controlling the pump to prepare the beverage.

10. A non-transitory computer readable medium comprising the computer program according to the directly preceding claim.

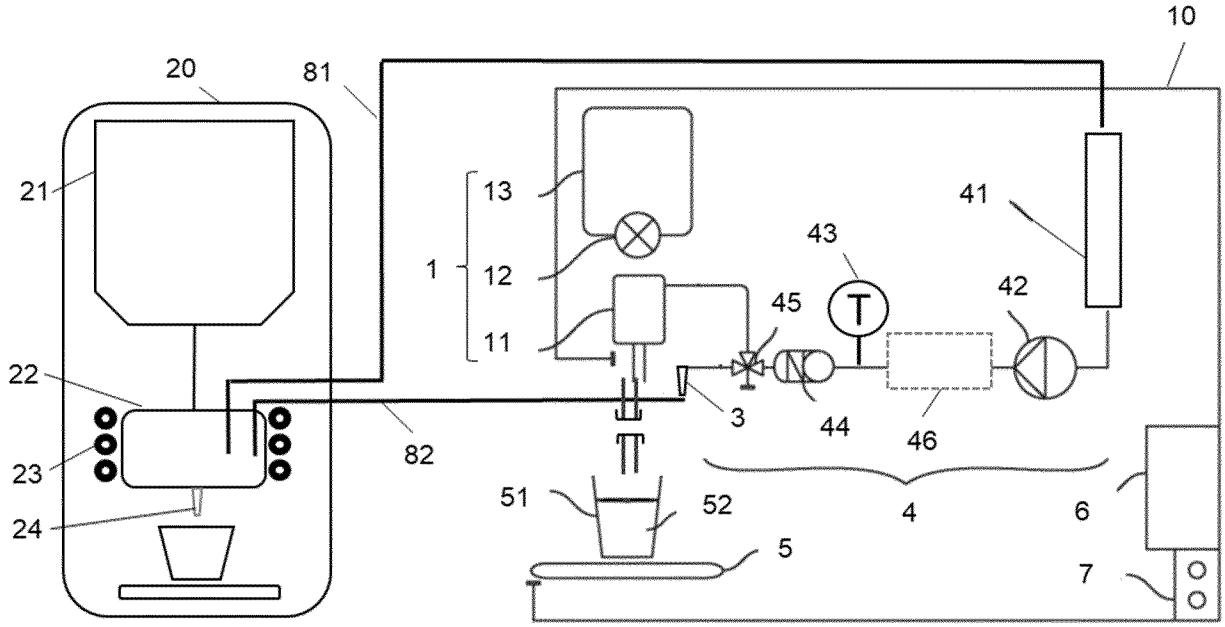

FIGURE 1

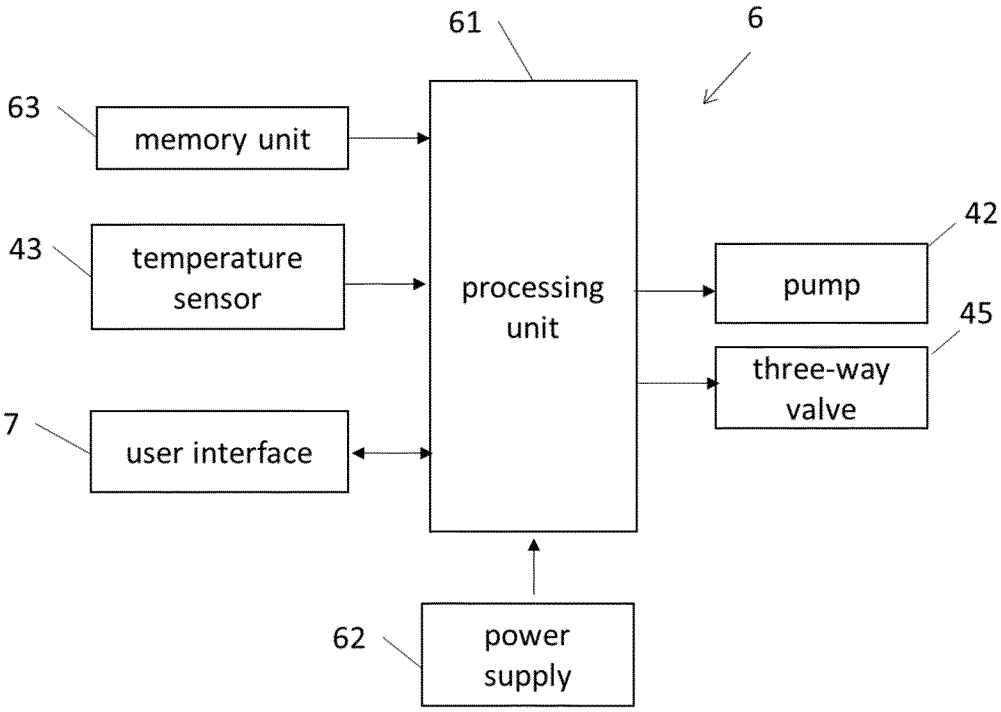

FIGURE 2

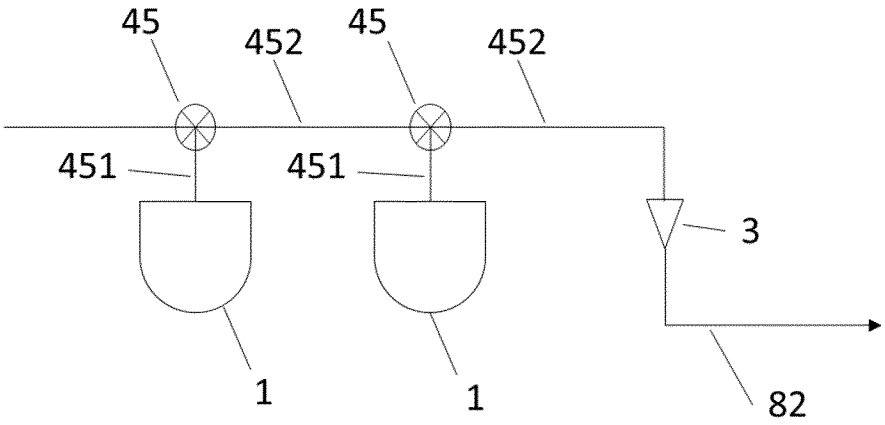

FIGURE 3

INTERNATIONAL SEARCH REPORT

International application No
PCT/EP2020/053921

A. CLASSIFICATION OF SUBJECT MATTER
INV. A47J31/41 A47J31/56
ADD.

According to International Patent Classification (IPC) or to both national classification and IPC

B. FIELDS SEARCHED

Minimum documentation searched (classification system followed by classification symbols)
A47J

Documentation searched other than minimum documentation to the extent that such documents are included in the fields searched

Electronic data base consulted during the international search (name of data base and, where practicable, search terms used)

EPO-Internal, WPI Data

C. DOCUMENTS CONSIDERED TO BE RELEVANT

Category*	Citation of document, with indication, where appropriate, of the relevant passages	Relevant to claim No.
A	US 5 975 365 A (HSIEH MING-SHIEN [TW]) 2 November 1999 (1999-11-02) column 2, line 48 - column 5, line 6; figures 1-5	1-10
A	WO 2018/121944 A1 (NESTEC SA [CH]) 5 July 2018 (2018-07-05) page 9, line 30 - page 16, line 12; figures 1-8	1-10
A	WO 2013/164779 A1 (THE CONCENTRATE MFG CO IRELAND [IE]) 7 November 2013 (2013-11-07) paragraph [0028] - paragraph [0076]; figures 1-8	1-10

-/--

[X] Further documents are listed in the continuation of Box C.

[X] See patent family annex.

* Special categories of cited documents :

"A" document defining the general state of the art which is not considered to be of particular relevance

"E" earlier application or patent but published on or after the international filing date

"L" document which may throw doubts on priority claim(s) or which is cited to establish the publication date of another citation or other special reason (as specified)

"O" document referring to an oral disclosure, use, exhibition or other means

"P" document published prior to the international filing date but later than the priority date claimed

"T" later document published after the international filing date or priority date and not in conflict with the application but cited to understand the principle or theory underlying the invention

"X" document of particular relevance; the claimed invention cannot be considered novel or cannot be considered to involve an inventive step when the document is taken alone

"Y" document of particular relevance; the claimed invention cannot be considered to involve an inventive step when the document is combined with one or more other such documents, such combination being obvious to a person skilled in the art

"&" document member of the same patent family

Date of the actual completion of the international search	Date of mailing of the international search report
13 March 2020	01/04/2020

Name and mailing address of the ISA/	Authorized officer
European Patent Office, P.B. 5818 Patentlaan 2 NL - 2280 HV Rijswijk Tel. (+31-70) 340-2040, Fax: (+31-70) 340-3016	Klintebäck, Daniel

1

Form PCT/ISA/210 (second sheet) (April 2005)

INTERNATIONAL SEARCH REPORT

International application No
PCT/EP2020/053921

C(Continuation). DOCUMENTS CONSIDERED TO BE RELEVANT

Category*	Citation of document, with indication, where appropriate, of the relevant passages	Relevant to claim No.
A	WO 2012/074736 A1 (PEPSICO INC [US]; LI XUEJUN [US] ET AL.) 7 June 2012 (2012-06-07) paragraph [0011] - paragraph [0037]; figures 1-6 -----	1-10

1

INTERNATIONAL SEARCH REPORT

Information on patent family members

International application No
PCT/EP2020/053921

Patent document cited in search report	Publication date	Patent family member(s)	Publication date
US 5975365 A	02-11-1999	DE 29814318 U1	03-12-1998
		US 5975365 A	02-11-1999
WO 2018121944 A1	05-07-2018	AU 2017387345 A1	30-05-2019
		BR 112019010296 A2	03-09-2019
		CN 109982618 A	05-07-2019
		EP 3562359 A1	06-11-2019
		JP 2020503089 A	30-01-2020
		PH 12019550082 A1	10-02-2020
		WO 2018121944 A1	05-07-2018
WO 2013164779 A1	07-11-2013	BR 112014027221 A2	27-06-2017
		EP 2844116 A1	11-03-2015
		WO 2013164779 A1	07-11-2013
WO 2012074736 A1	07-06-2012	AU 2011337008 A1	20-06-2013
		AU 2016204873 A1	28-07-2016
		AU 2018211303 A1	23-08-2018
		BR 112013015741 A2	18-10-2016
		CA 2819600 A1	07-06-2012
		CN 103298381 A	11-09-2013
		EP 2645910 A1	09-10-2013
		JP 6190899 B2	30-08-2017
		JP 2014500205 A	09-01-2014
		JP 2016074487 A	12-05-2016
		MX 342136 B	14-09-2016
		NZ 611596 A	26-06-2015
		RU 2013129997 A	10-01-2015
		RU 2015116858 A	27-08-2015
		US 2012138632 A1	07-06-2012
		US 2016257550 A1	08-09-2016
		WO 2012074736 A1	07-06-2012