L. C. BAYLES.

EXHAUST VALVE FOR HAMMER DRILLS.

APPLICATION FILED MAR. 29, 1917.

1,371,721. Patented Mar. 15, 1921.

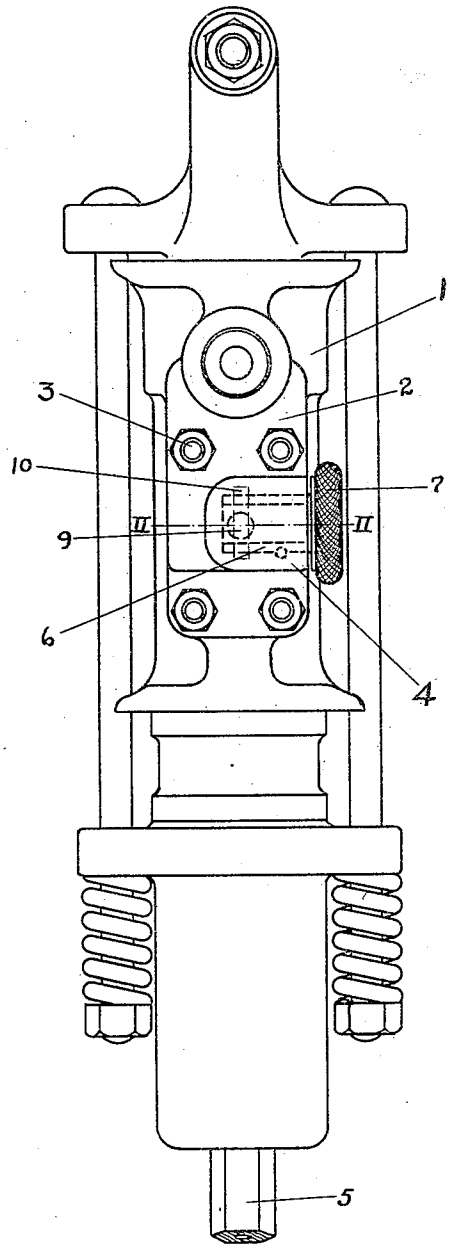

Fig. 1

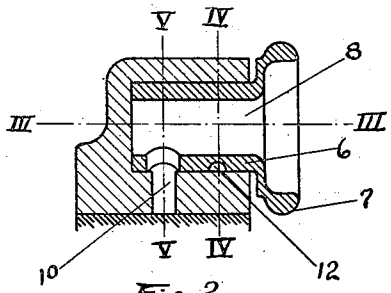

Fig. 2

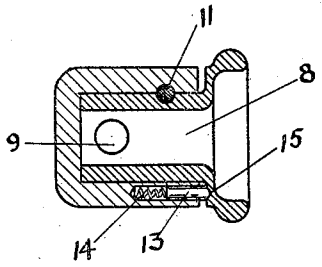

Fig. 3

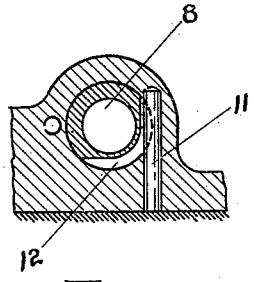

Fig. 4

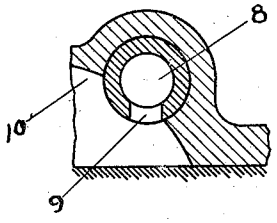

Fig. 5

INVENTOR

Lewis C. Bayles

BY

Joseph N. Schofield

ATTORNEY

UNITED STATES PATENT OFFICE.

LEWIS C. BAYLES, OF EASTON, PENNSYLVANIA, ASSIGNOR TO INGERSOLL-RAND COMPANY, OF JERSEY CITY, NEW JERSEY, A CORPORATION OF NEW JERSEY.

EXHAUST-VALVE FOR HAMMER-DRILLS.

1,371,721. Specification of Letters Patent. Patented Mar. 15, 1921.

Application filed March 29, 1917. Serial No. 158,348.

To all whom it may concern:

Be it known that I, LEWIS C. BAYLES, a citizen of the United States, residing at Easton, in the county of Northampton and State of Pennsylvania, have invented a certain new and useful Improvement in Exhaust-Valves for Hammer-Drills, of which the following is a specification.

This invention relates to hammer drills, and in particular to a valve for controlling the exhaust port of such drills.

The object of this invention is to improve the construction of the exhaust closing valve shown and described in my Patent No. 1,144,991 granted July 6th, 1915.

A further object of this invention is to provide a simple valve which may be used to reduce or completely close the exhaust opening of a hammer drill so as to decrease the drilling speed and at the same time increase the amount of motive fluid passing through the hollow drill steel to blow the rock cuttings from the hole being drilled.

A still further object of this invention is to provide a valve for the above purposes which will be self-contained within the drill and thus protected from damage and breakage.

With these and other objects in view an exhaust valve for hammer drills has been devised, a practical embodiment of which is shown in the accompanying drawings.

In the drawings annexed hereto and forming a part of this specification,

Figure 1 shows an assembled view of a hammer drill with the improved exhaust controlling valve in place,

Fig. 2, a cross sectional view taken on the line II—II of Fig. 1.

Fig. 3, a cross sectional view on the line III—III of Fig. 2,

Fig. 4, a cross sectional view on the line IV—IV of Fig. 2, and

Fig. 5, a cross sectional view on the line V—V of Fig. 2.

In the construction shown 1 is the cylinder to which the valve chest 2 is secured by means of the studs 3. The main exhaust passes from the drill to atmosphere through a port in the boss 4 on the valve chest 2.

In order to remove the dust and rock cuttings from the hole being drilled a small portion of the actuating fluid is permitted to escape from the cylinder 1 through the hollow drill steel 5 to the bottom of the hole. Under certain conditions of operation it is found to be very desirable to increase the amount of the air passing through the drill steel and at the same time reduce the drilling power and speed of the hammer drill more or less, while at other times it is desirable to continue the flow of air through the hollow drill steel while the hammer drill remains inoperative.

The restricting and closing of the exhaust port is accomplished in the present invention by an improved form of valve constructed as shown. The port or bore in the boss 4 is made large enough to receive the body portion 6 of the valves preferably in the form of an open ended sleeve. The outer end of the valve 7 projects beyond the valve chest and is enlarged in diameter, the surface of which is knurled making it easy to grip and rotate by hand. The valve is further provided with a longitudinal hole 8 opening to the atmosphere at the outer end and with a lateral hole 9 passing through the side of the wall of the body 6 and communicating with the longitudinal hole 8.

In the position shown in Fig. 2 and Fig. 5 the exhaust is free to pass from the exhaust chamber 10 of the valve chest, through openings 9 and 8 to the atmosphere. A partial rotation of the valve to the left will reduce the size of the communication between 10 and 9 thus choking the exhaust, creating a back pressure in the cylinder, retarding the operation of the hammer drill and increasing the flow of motive fluid through the drill steel 5. A still further rotation of the valve will close the communication between 10 and 9, causing the hammer drill to cease operating but permitting the motive fluid to continue to flow from the cylinder through the drill steel to the bottom of the hole being drilled.

In order to secure the valve in the chest, a pin 11 is inserted in the chest 2 fitting in a groove 12 in the surface of the body 6 of the valve. This groove 12 preferably extends only partially around the circumference of the body 6, as shown, and serves to limit the amount of rotation of the valve. When the valve is rotated to its extreme in one direction, as shown in the drawings, the

opening 9 registers with the exhaust recess 10 of the chest 2 and when rotated to the other extreme of its movement the opening 9 is out of register with the recess 10 and the exhaust is effectively closed.

A detent, comprising a spring pressed pin 13 is preferably provided to hold the valve in open, closed, or partially closed position, as desired, a spring 14 serving to hold the end of the pin 13 pressed into slight depressions 15 in the enlarged end 7 of the valve, thus effectively holding the valve against rotation due to vibration of the hammer drill, but permitting it to be easily rotated by hand when desired.

It is to be understood that the present showing and description discloses only one specific modification of my invention and other forms and modifications are included within the spirit and scope of the same as expressed in the appended claim.

What I claim is:

In an exhaust closing valve for rock drills, the combination of a valve seat having a bore ported at right angles to its axis intermediate the length of the bore, a sleeve open at both ends forming a valve revolubly mounted in the bore of said seat and having a port in said bore, manual operating means in the form of a knurled head connected to the sleeve and projecting beyond the seat for turning the valve, spring locking means located within the walls of the said seat and coöperating with the said head for locking the valve in any predetermined position, and a pin and slot connection between the sleeve and the seat for holding the valve in the said seat and for limiting the rotative movement of the valve.

In testimony whereof, I have hereunto set my hand.

LEWIS C. BAYLES.