(12) INTERNATIONAL APPLICATION PUBLISHED UNDER THE PATENT COOPERATION TREATY (PCT)

(19) World Intellectual Property Organization
International Bureau

(43) International Publication Date
7 November 2013 (07.11.2013)

WIPO | PCT

(10) International Publication Number
WO 2013/166058 A1

(51) International Patent Classification:
G01V 1/02 (2006.01) *G01V 1/155* (2006.01)

(21) International Application Number:
PCT/US2013/038929

(22) International Filing Date:
30 April 2013 (30.04.2013)

(25) Filing Language: English

(26) Publication Language: English

(30) Priority Data:

61/640,411	30 April 2012 (30.04.2012)	US
61/640,432	30 April 2012 (30.04.2012)	US
61/640,455	30 April 2012 (30.04.2012)	US

(71) Applicant: **CONOCOPHILLIPS COMPANY** [US/US]; IP Services Group - Attn: Docketing, 600 N. Dairy Ashford Bldg. ML-1065, Houston, Texas 77079 (US).

(72) Inventors: **EICK, Peter M.**; 18207 Kelly Creek, Houston, Texas 77094 (US). **BREWER, Joel D.**; 514 Cypress Vista, Houston, Texas 77094 (US). **SHAN, Shan**; 12406 Aliso Bend Lane, Houston, Texas 77041 (US).

(74) Agent: **BERGER, Michael D.**; Conocophillips Company, IP Services Group, 600 N. Dairy Ashford, Bldg. ML-1065, Houston, Texas 77079 (US).

(81) Designated States *(unless otherwise indicated, for every kind of national protection available)*: AE, AG, AL, AM, AO, AT, AU, AZ, BA, BB, BG, BH, BN, BR, BW, BY, BZ, CA, CH, CL, CN, CO, CR, CU, CZ, DE, DK, DM, DO, DZ, EC, EE, EG, ES, FI, GB, GD, GE, GH, GM, GT, HN, HR, HU, ID, IL, IN, IS, JP, KE, KG, KM, KN, KP, KR, KZ, LA, LC, LK, LR, LS, LT, LU, LY, MA, MD, ME, MG, MK, MN, MW, MX, MY, MZ, NA, NG, NI, NO, NZ, OM, PA, PE, PG, PH, PL, PT, QA, RO, RS, RU, RW, SC, SD, SE, SG, SK, SL, SM, ST, SV, SY, TH, TJ, TM, TN, TR, TT, TZ, UA, UG, US, UZ, VC, VN, ZA, ZM, ZW.

(84) Designated States *(unless otherwise indicated, for every kind of regional protection available)*: ARIPO (BW, GH, GM, KE, LR, LS, MW, MZ, NA, RW, SD, SL, SZ, TZ, UG, ZM, ZW), Eurasian (AM, AZ, BY, KG, KZ, RU, TJ, TM), European (AL, AT, BE, BG, CH, CY, CZ, DE, DK, EE, ES, FI, FR, GB, GR, HR, HU, IE, IS, IT, LT, LU, LV, MC, MK, MT, NL, NO, PL, PT, RO, RS, SE, SI, SK, SM, TR), OAPI (BF, BJ, CF, CG, CI, CM, GA, GN, GQ, GW, ML, MR, NE, SN, TD, TG).

Published:

— *with international search report (Art. 21(3))*

(54) Title: DISTINCTIVE LAND SEISMIC SWEEP

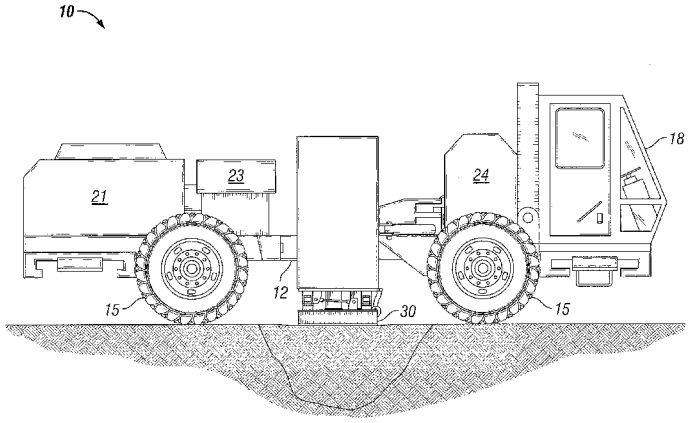

FIG. 1

(57) Abstract: The invention is an electric sweep type seismic vibrator source of the type used in seismic prospecting for hydrocarbons. The source uses an engine and generator combination to create electric power for all systems on the source such as driving a frame of linear electric motors that direct a rod or piston to contact the ground in a recurring fashion along with driving the source from location to location through a survey area. Preferably a foot is arranged on the bottom end of the rod or piston for contact with the ground and by engaging the grid of motors to push down against the ground in a rapid progression, acoustic energy is created and delivered into the ground for geophones to sense and record. However, the rapid progression of pulses or sweep of seismic energy is delivered in a distinctive fashion as compared to a conventional upsweep or downsweep and the distinctiveness is also achieved by creating a designed cadence or timing such that each pulse in a series of pulses is not delivered in a regular timing. Several similar seismic sources may be employed where each is provided with its own distinctive series of pulses such that each may be identified within the data record and source separation from a number of seismic sources may be accomplished.

WO 2013/166058 A1

DISTINCTIVE LAND SEISMIC SWEEP

FIELD OF THE INVENTION

[0001] This invention relates to vibratory seismic sources and particularly to seismic sources that are held to the ground to deliver vibratory impulses into the earth for seismic prospecting of hydrocarbons and other subsurface resources.

BACKGROUND OF THE INVENTION

[0002] In the process of acquiring seismic data, seismic energy is delivered into the earth. Over the years, the preferred attributes of the seismic energy delivered into the earth have been honed to include a broad spectrum of wavelengths and sufficient power across the spectrum to be recorded at the surface. In general, a suitable land source must be able to deliver seismic energy waves in a spectrum of wavelengths from about 8 Hz up to 60-80 Hz. The source must have sufficient power across the spectrum so that the seismic waves have measurable amplitude at the surface after transiting deep into the earth, reflecting from or refracting through layers in the earth and transiting back to the surface. A last major characteristic of a desirable seismic source is that the energy from the source is distinguishable in the data record from seismic energy from other sources whether from background sources or other seismic prospecting.

[0003] Explosive charges have long been used as seismic sources although the intense release of energy is typically not permitted except in remote locations. Explosive sources, however, provide a wide array of wavelengths with considerable power across the wavelengths.

[0004] Hydraulic reciprocating seismic vibrators or vibes have been in use for many years using a baseplate connected to hydraulic rams that cause a reaction mass to reciprocate up and down to shake the ground through the baseplate. The hydraulic rams are operated to move the reaction mass through a sweep of the desired frequencies. However, the hydraulic systems are limited in their ability to provide sufficient power at high frequencies due to limitations of hydraulic flow in and out of the hydraulic cylinders. At very high hydraulic velocities, the hydraulic fluid is subject to cavitation

effects when reversing directions that limits the amplitude of the movement of the reaction mass and thus the energy input in to the earth. At low frequencies, it is difficult for the hydraulic vibe to have enough travel to generate a low frequency wave into the ground. For example, consider how one would generate a one Hz wave with a hydraulic vibe. A very long throw of the reaction mass is needed to generate that wavelet because the mass has to be moving down and up the full one second.

BRIEF SUMMARY OF THE DISCLOSURE

[0005] The invention more particularly relates to a process for delivering a distinctive seismic sweep for a seismic prospecting operation wherein an electrically powered seismic source is provided that has a plurality of linear electric motors where a ground contact element of the linear electric motor is provided in contact with the ground. The ground contact elements of linear electric motors are driven to deliver multiple impulses against the ground in a manner to create a distinctive composite sweep to convey seismic energy into the earth.

BRIEF DESCRIPTION OF THE DRAWINGS

[0006] A more complete understanding of the present invention and benefits thereof may be acquired by referring to the follow description taken in conjunction with the accompanying drawings in which:

[0007] Figure 1 is an elevation view of a discrete electric seismic source unit;

[0008] Figure 2 is an enlarged fragmentary view of an electromechanical linear motor assembly for delivering seismic energy into the ground; and

[0009] Figure 3 is an enlarged perspective fragmentary view of a grid of electro mechanical linear motor assemblies for cooperatively delivering seismic energy into the ground.

DETAILED DESCRIPTION

[0010] Turning now to the detailed description of the preferred arrangement or arrangements of the present invention, it should be understood that the inventive features and concepts may be manifested in other arrangements and that the scope of the invention is not limited to the embodiments described or illustrated. The scope of the invention is intended only to be limited by the scope of the claims that follow.

[0011] As shown in Figure 1, an alternative vibrator actuator source 10 is shown comprising a chassis 12, four wheels 15 and a driver's cab 18. The alternative vibrator actuator source 10 uses a diesel engine 21 to turn an electric generator 23 and uses electric power to power the source 10 both for delivering acoustic energy into the ground and for moving along the ground from location to location. The source 10 utilizes electricity for all of its power needs. A large battery 24 is included to store energy for high situations of high electrical demand or when there are problems with the generator 23, but the battery 24 provides the power to return to a location for repair.

[0012] Referring now to Figures 2 and 3, the acoustic energy delivery system 30 is carried under the chassis 12 and comprises a frame 32 that carries a number of linear motors 35. Each linear electric motor 35 includes a tubular body 36 and a rod or actuation bar 38 positioned within the tubular body 36 that extends telescopically from the lower end of the tubular body 36. A replaceable foot 39 is attached to the bottom end of the rod 38 for contacting the ground. The frame 32 includes mounts for a grid of linear motors 35. In the preferred embodiment approximately 112 linear motors 35 are arranged in a grid of perhaps 8 by 14.

[0013] In operation, the frame 32 is lowered into proximity to the ground G and the linear motors 35 are operated to lower the replaceable feet 39 into contact with the ground G. Once all of the replaceable feet 39 are in contact with the ground G, the linear motors 35 are activated to thrust the rods 38 toward the ground G and deflect the ground G and thereby deliver an impulse into the earth. The linear motors 35 are quickly operated to recoil the rods 38 without disengaging contact with the ground G by the replaceable feet 39. By successive thrusts and recoils, a pattern of acoustic energy is effectively delivered into the earth while the feet remain in contact with the ground G. It should be noted that the undulations and irregularities of the ground G may be accommodated avoiding decoupling across the dimension of the frame 32. This method may be arranged to automatically compensate for surface topographic variations along with soft and hard spots on the ground surface like rocks or logs. While it is recognized that ground typically does not deflect much, it does not take much deflection with a 60,000 pound vibrator holding the replaceable feet 39 to the ground G to deliver very useful acoustic energy. In this procedure, all of the linear motors 35 would be operated at

the same time in the same direction using electrical power created by the electric generator 23 and supplemental battery 24 power if needed. The impulses would be repeated in a sequence where the impulse would occur with progressively increasing or decreasing rapidity such that a progression of frequencies of impulse forces would effectively deliver acoustic energy into the earth. The acoustic energy being characterizeable as a progressive pattern of frequencies covering a spectrum from about 1 Hz up to at least 80 Hz and preferably up to 120 Hz similar to a sweep.

[0014] An advantage of the preferred embodiment of the invention is that the impulses could be used a source in and of itself. The geophysically preferred source would be a pure spike of energy similar to an explosion of dynamite. The advantage of explosives like dynamite is the speed at which the energy is transferred from the source to the earth. Explosives transfer this energy very quicldy which form the geophysically desired spike via physical movement of the earth's particles. Essentially, when a dynamite shot is fired it compresses the emih and also creates a void space due to the explosion both of which contribute to particle motion. While the preferred embodiment cannot create a perfect spike, the linear motors can transfer energy very quickly and because they are electrically driven, full power can be supplied instantaneously. This forms the quasi-impulsive spike of energy into the ground. The pulse is quasi-impulsive because the linear motor 35 can only move so fast and thus is band-limited. It should be noted that prior to delivering the impulse, the rod 38 is extended to put the foot 39 into contact with the ground. While this is preferred, it is not entirely necessary as the impulse may be accomplished with the rods 38 provided with space to punch the ground G.

[0015] The electric linear motors 35, working in conjunction, would not suffer the limitations of the hydraulic pumping systems at high frequency. Applying and reversingelectric power instantly to the linear motors 35 causes movement of the rods 38 within the tubular bodies 36, and the impulse frequency range is greatly expanded. By using electrical control circuits that are commonly available for diesel electric train locomotives and hybrid cars, the power can be applied instantly with a very high degree of control and stabilization.

[0016] It should be recognized that higher frequencies than typically delivered may be achievable by the source 10. Perhaps frequencies as high as 200 Hz or higher may become useful in the field of seismic prospecting. There is no recognized reason that source 10 cannot deliver such high frequency acoustic energy into the ground G. In addition, it is generally understood that high frequency energy provides high resolution data. Unfortunately, high frequency energy attenuates in the earth more rapidly than low frequency energy. With a large number of linear electric motors, whether 2000, more than 2000 or less than 2000 like the example given of 112 motors, will be able to deliver high energy at high frequency. The size of the linear motors may be reduced or increased to adjust and adapt to ideal energy delivery system to create an optimal frequency range with high energy across the spectrum.

[0017] The selection of the specific linear motors is an engineering issue at production time because they can be sourced to have a large thrust force but with short strokes as compared to those that have longer strokes with less thrust, but higher speeds. As one embodiment of the invention, the frame 32 has approximately 112 linear motors 35 that are arranged in a grid of perhaps 8 by 14. Each linear motor is capable of outputting a peak acceleration force of approximately 2400 Newtons (N) or approximately 540 pounds-force while using 34 amps RMS (Arms) at 240 volts AC. The 112 linear motors would then be capable of outputting 268,800 N or 60,480 pounds-force using approximately 914 kilowatts of power. An array of 112 of these motors could operate in the space provided and would require approximately a 1225 Hp diesel electric motor and generator providing the prime mover power source assuming reasonable losses in energy conversion.

[0018] One advantage of using a plurality of linear electric motors as proposed by the present invention is that other operational modes become available and useful. For example, while the operational description above described providing an impulse, a pure impulsive type displacement comparable to an explosive force may actually be possible. Explosives don't sweep but provide all the energy in a single pop that includes a broad spectrum of wavelengths within the energy impulse. In the preferred embodiment of the invention a large plurality of linear electric motors deliver energy

over a short duration that would be a band-limited pulse so, in effect, the pulse would be a quasi-impulsive impact. However, the dynamics of moving the rods 38 under electric power provide options that a hydraulic system of current design would not be able to deliver the instantaneous energy impact.

[0019] According to an embodiment of the present invention, very creative sweeps may be delivered such that high frequencies, low frequencies and intermediate frequencies may be delivered in an irregular pattern that forms a distinguishable pattern in the data record that may be easily attributable to the source that delivered that energy into the ground. Ideally, a unique and highly distinctive sweep or series of pulses or actuations of the linear motors 35 may be delivered. At the moment, the only limitations are that the cumulative time at any one frequency should be reasonably consistent across the spectrum and the sweep should fully populate the entire spectrum. Even this restriction can be mitigated if one is willing to deal with a variable background noise level because actuation of the source at different frequencies for different lengths of time sets up a variable signal to noise ratio. The unique sweeps may be creatively designed such that multiple seismic vibes may deliver seismic energy at the same time where each vibe has its own distinctive sweep and the resulting seismic data may be inverted to identify which source at which location provided the source for each signal.

[0020] This new capability allows many vibes to be delivering seismic energy into the ground in nearby locations without interfering with one another or creating the need for time sharing. There are techniques for operating a gang or fleet of vibes concurrently, but they require starting the sweeps for all the vibes together so that they may be distinguished by phase offset. Phase offset works as in HFVS or ZenSeis®, but using a highly distinctive sweeps would likely provide higher clarity in distinguishing the energy of each vibe and stabilize the inversion and separation matrix more fully. By using the current invention it is possible to generate a composite signature from the multiple simultaneous sweeps where distinct interference patterns occur between linear motors 35 in the same acoustic energy delivery system 30. In the simplest form it is equivalent to the addition of sine waves of different frequencies. Another point of view, there are potential embodiments where a heterodyning effect may be created to provide a highly refined signal into the earth.

[0021] Ultimately, the potential permutations of the composite sweeps can make for a great many composite signatures that all have very distinctive attributes that are easily identifiable in the data record. For example, the series of impulses provide seismic energy across a frequency spectrum wherein the series of impulses are distinctive or distinguishable from other sweeps of seismic energy due to an irregular, but distinctive order of progression through the frequency spectrum with amplitude variations from the composite nature of the multiple sweeps. The other seismic energy may be from other vibes within a survey or in a completely separate survey on nearby land.

[0022] In an alternative embodiment of the invention, the alternative vibrator actuator source 10 using the electric linear motors 35 attached to the replaceable feet 39 that are in contact with the ground G, the linear motors 35 are activated to thrust the rods 38 toward the ground G and deflect the ground G and thereby deliver an impulse or acoustic signal into the earth. The plurality of linear electric motors 35 are activated in a manner such that a portion of the motors 35 are operated at one frequency of thrust while one or more other portions operate at other frequencies of thrust so that multiple frequencies are delivered simultaneously creating a desired composite signature or signal to the ground G and into the earth.

[0023] In another embodiment of the invention the alternative vibrator actuator source 10 using the electric linear motors 35 attached to the replaceable feet 39 that are in contact with the ground G, the linear motors 35 are activated to thrust the rods 38 toward the ground G and deflect the ground G and thereby deliver an impulse or acoustic signal into the earth. The plurality of linear electric motors 35 are activated in a manner such that a portion of the motors 35 operate over one band of frequency through a sweep or other pattern of thrusts while one or more other portions operate at other bands of frequencies through sweeps or other pattern of thrusts so that multiple frequencies are delivered simultaneously creating a desired composite signature or signal into the ground G.

[0024] For clarity, the distinctive sweeps may be constructed much like a song that uses the frequency of "notes" along with a cadence between the notes. In a seismic sweep, the frequency range or spectrum is much broader, starting at about 6 Hz, but possibly lower and extending up to at least 60 Hz and typically up to 80 to 100 Hz.

Given the capability of the linear motors, this could be extended downward to near 1 Hz on the low end and significantly higher on the high end, for example at least 150 Hz.

[0025] While a song may not utilize all the range of musical notes, a seismic sweep should include portions covering the entire range and should be balanced across the range. The timing or cadence of the sweep may also include gaps to add to uniqueness. Ultimately, the potential permutations of sweeps can make for a great many sweeps that all have very distinctive attributes that are easily identifiable in the data record. For example, the series of impulses provide seismic energy across a frequency spectrum wherein the series of impulses are distinctive or distinguishable from other sweeps of seismic energy due to an irregular, but distinctive order of progression through the frequency spectrum. The other seismic energy may be from other vibes within a survey or in a completely separate survey on nearby land. The impulses may also be distinctive or distinguishable from other sweeps due to a distinctive cadence or irregular time delays between the impulses.

[0026] As an analogy, this distinctive sweep approach to the sourcing of energy could be equated to what occurs when you are in a crowded party and everyone is talking at once. While there is a great deal of background noise occurring, if you are concentrating on a particular person you can discern their voice from the noise of the background. The distinctive sweep would achieve the same result.

[0027] Another way to thing of the invention is to think of the comparison between a distinctive sweep made up of say "Country" music vs. "Opera" music. If both were bandlimited to the sweep frequencies desired, and then power balanced to maintain consistent signal to noise ratios in all bands, then they would be quite unique and easily identifiable. This can be easily shown with any of the digital signal processing software packages and common MP3 files. Casual listening to the differences between the "songs" after a bit of digital filtering shows how distinct they can be made. The key inventive insight is that the linear motor offers the seismic acquisition designer access to a stereo like loudspeaker that can be manipulated to produce a distinctive sweep in very non-traditional methods which a hydraulic vibrator is incapable of producing.

[0028] In closing, it should be noted that the discussion of any reference is not an admission that it is prior art to the present invention, especially any reference that may

have a publication date after the priority date of this application. At the same time, each and every claim below is hereby incorporated into this detailed description or specification as a additional embodiments of the present invention.

[0029] Although the systems and processes described herein have been described in detail, it should be understood that various changes, substitutions, and alterations can be made without departing from the spirit and scope of the invention as defined by the following claims. Those skilled in the art may be able to study the preferred embodiments and identify other ways to practice the invention that are not exactly as described herein. It is the intent of the inventors that variations and equivalents of the invention are within the scope of the claims while the description, abstract and drawings are not to be used to limit the scope of the invention. The invention is specifically intended to be as broad as the claims below and their equivalents.

CLAIMS

1. A process for delivering a distinctive seismic sweep for a seismic prospecting operation, the process comprising:
   a) providing an electrically powered seismic source having a plurality of linear electric motors where a ground contact element of the linear electric motor is provided in contact with the ground; and
   b) driving the ground contact elements of linear electric motors to deliver one or more impulses against the ground

2. The process according to claim 1, wherein the ground contact elements are driven to deliver multiple impulses in a manner to create a distinctive series of impulses to convey seismic energy into the earth.

3. The process according to claim 1, wherein the ground contact elements of the linear electric motors are driven such that at least two of the plurality of linear motors are deliberately and concurrently delivering different seismic signals against the ground thereby creating a composition of all of the various signals where composition defines a distinctive composite signature of seismic energy conveyed into the earth.

4. The process according to claim 1 wherein the ground contact elements of linear electric motors are driven in a coordinated impulse against the ground to deliver a single impulse against the ground and convey seismic energy into the earth that include a broad frequency spectrum for seismically illuminating geophysical structures.

5. The process for delivering acoustic energy into the earth according to any of claims 1 to 4 further including the step of receiving and recording the seismic energy returning to the surface of the earth.

6. The process for delivering acoustic energy into the earth according to claim 2 wherein the series of impulses comprises seismic energy across a frequency spectrum and wherein the series of impulses are distinctive or distinguishable from other sweeps of seismic energy due to an irregular, but distinctive order of progression through the frequency spectrum.

7. The process for delivering acoustic energy into the earth according to claim 2 wherein the impulses are distinctive or distinguishable from other sweeps due to a distinctive cadence or irregular time delays between the impulses.

8. The process for delivering acoustic energy into the earth according to claim 3, wherein the linear electric motors are each activated with a different frequency of thrust to form a distinctive composite signature to convey seismic energy into the earth.

9. The process for delivering acoustic energy into the earth according to claim 3 wherein the linear electric motors are activated in groups, each group with a different frequency of thrust to form a distinctive composite signature to convey seismic energy into the earth.

10. The process for delivering acoustic energy into the earth according to claim 3 wherein the linear electric motors are each activated with a different band of frequency through a sweep or other pattern of thrusts to form a distinctive composite signature to convey seismic energy into the earth.

11. The process for delivering acoustic energy into the earth according to claim 3 wherein the linear electric motors are activated in groups, each group with a different band of frequency through a sweep or other pattern of thrusts to form a distinctive composite signature to convey seismic energy into the earth.

12. The process for delivering acoustic energy into the earth according to claim 3 wherein the impulses are distinctive or distinguishable from other seismic sources due to the distinctive composite signatures.

13. The process for delivering acoustic energy into the earth according to claim 4 wherein the step of driving the ground contact elements of the linear electric motors comprises driving the ground contact elements against the ground for at least 2 ms and no more than 12 ms.

14. The process for delivering acoustic energy into the earth according to claim 4 wherein the step of providing the ground contact element in proximity with the ground more particularly comprises providing the ground contact element into contact with the ground prior to driving the ground contact element against the ground to deliver the impulse

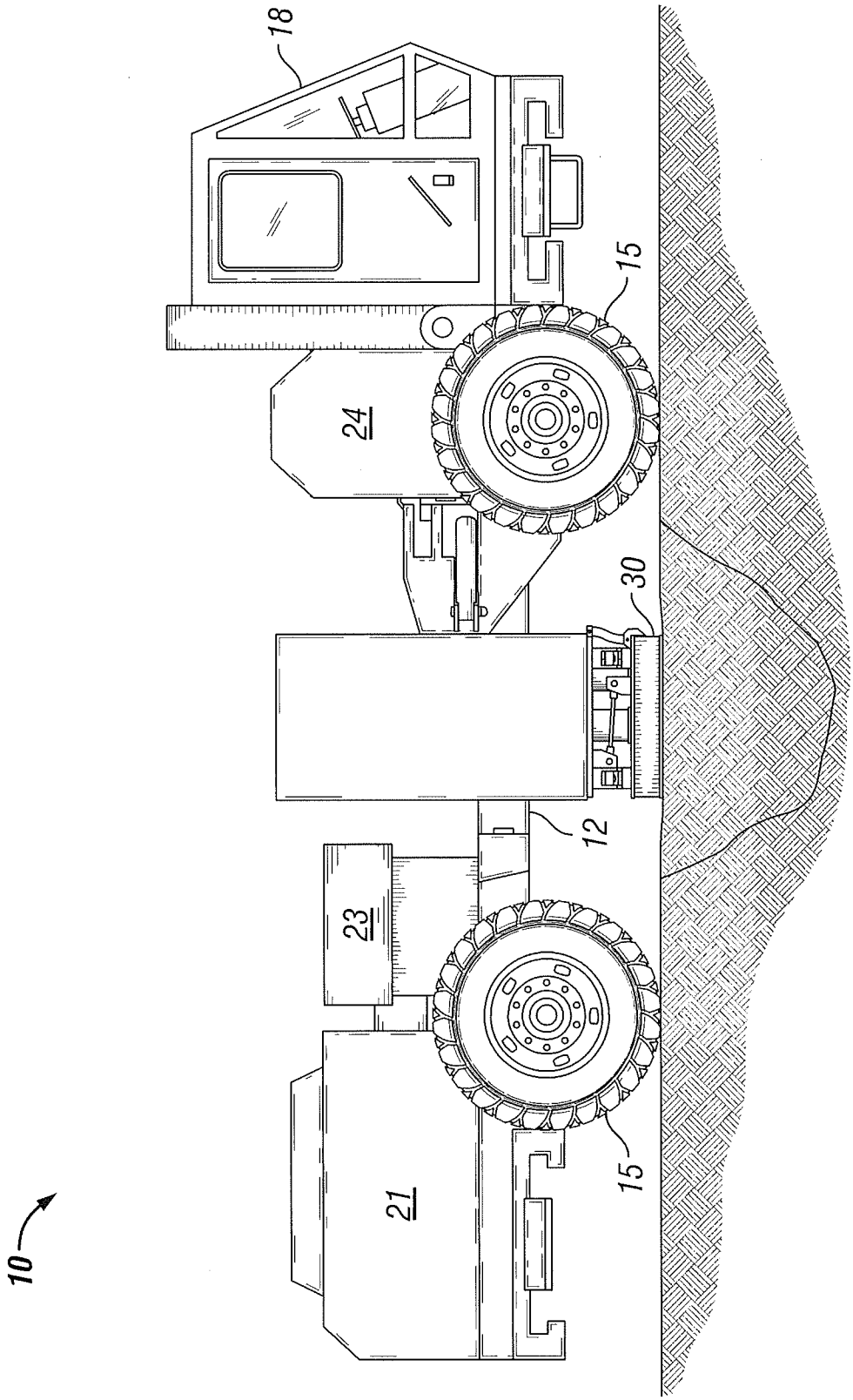

FIG. 1

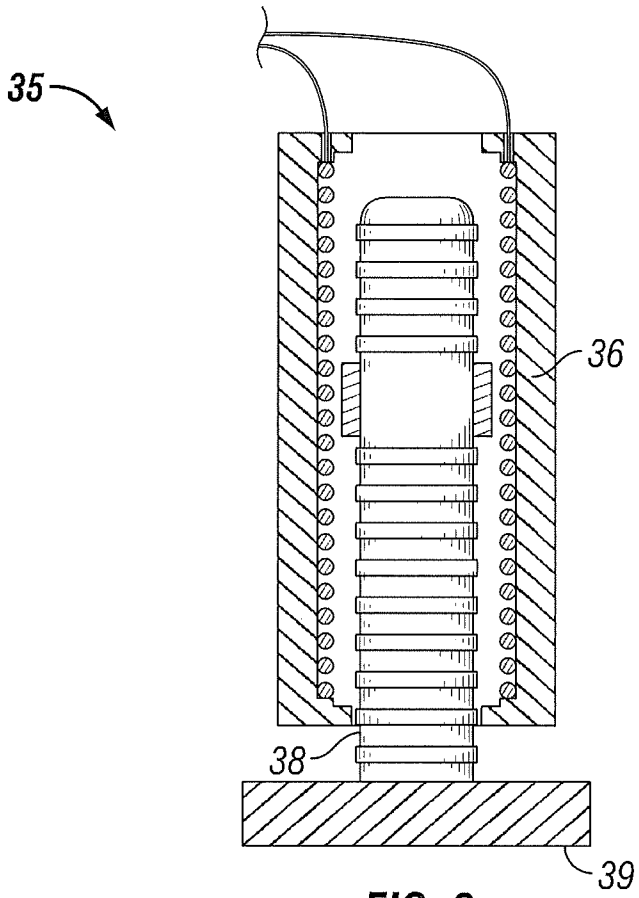

FIG. 2

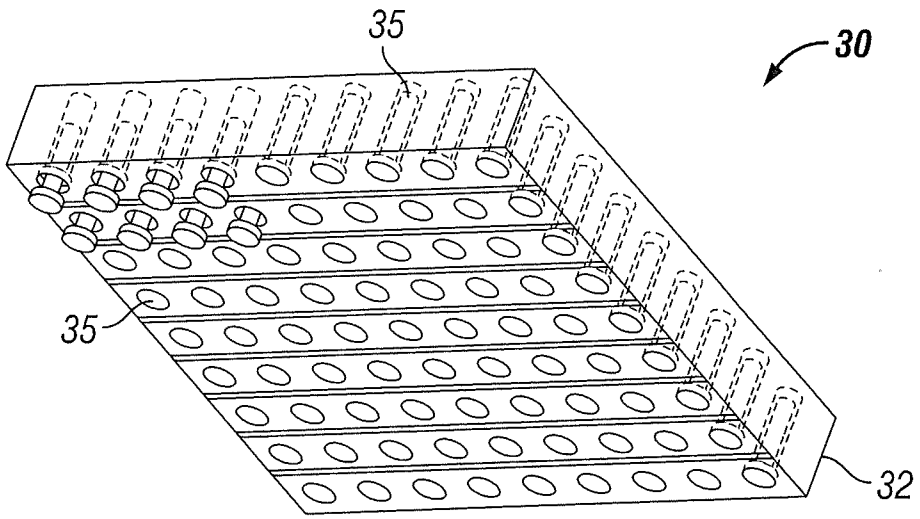

FIG. 3

INTERNATIONAL SEARCH REPORT

International application No.
PCT/US13/38929

A. CLASSIFICATION OF SUBJECT MATTER
IPC(8) - G01V 1/02, 1/155 (2013.01)
USPC - 367/76, 56, 14
According to International Patent Classification (IPC) or to both national classification and IPC

B. FIELDS SEARCHED

Minimum documentation searched (classification system followed by classification symbols)
USPC Classifications: 173/90, 91, 93.7, 95, 114, 117, 128; 367/14, 37, 40, 41, 56, 76
IPC(8) Classifications: G01V 1/00, 1/02, 1/147, 1/155 (2013.01)

Documentation searched other than minimum documentation to the extent that such documents are included in the fields searched

Electronic data base consulted during the international search (name of data base and, where practicable, search terms used)
MicroPatent (US-G, US-A, EP-A, EP-B, WO, JP-bib, DE-C,B, DE-A, DE-T, DE-U, GB-A, FR-A); DialogPro (Derwent, INSPEC, NTIS, PASCAL, Current Contents Search, Dissertation Abstracts Online, Inside Conferences); IP.com; Google; electric, motor, strike, impact, earth, ground, linear, coordinate, simultaneous, contact, impulse, activate, energize, group, cluster, set, assembly, differ, distinct, unique, separate, frequency, engine, source, power, period, duration, time, length, at least, minimum, greater than, over, above, no more than

C. DOCUMENTS CONSIDERED TO BE RELEVANT

Category*	Citation of document, with indication, where appropriate, of the relevant passages	Relevant to claim No.
X --- Y	US 2010/0157734 A1 (SITTON, G et al.) June 24, 2010; figures 2A-2C, 3A-3C, 4; paragraphs [0006], [0026], [0031]-[0038], [0041]-[0043], [0046], [0070]-[0072]; claims 1, 17-19	1-3, 5/1, 5/2, 5/3 and 6-12 ---------- 4, 5/4, 13, 14
Y	US 3277977 A (SILVERMAN, D) October 11, 1966; figure 1; column 3, lines 48-57; column 9, lines 5-16	4, 5/4, 13, 14
Y	US 4217571 A (HUGHES, D et al.) August 12, 1980; figure 3; column 3, lines 56-59	13

☐ Further documents are listed in the continuation of Box C. ☐

* Special categories of cited documents:
"A" document defining the general state of the art which is not considered to be of particular relevance
"E" earlier application or patent but published on or after the international filing date
"L" document which may throw doubts on priority claim(s) or which is cited to establish the publication date of another citation or other special reason (as specified)
"O" document referring to an oral disclosure, use, exhibition or other means
"P" document published prior to the international filing date but later than the priority date claimed
"T" later document published after the international filing date or priority date and not in conflict with the application but cited to understand the principle or theory underlying the invention
"X" document of particular relevance; the claimed invention cannot be considered novel or cannot be considered to involve an inventive step when the document is taken alone
"Y" document of particular relevance; the claimed invention cannot be considered to involve an inventive step when the document is combined with one or more other such documents, such combination being obvious to a person skilled in the art
"&" document member of the same patent family

Date of the actual completion of the international search	Date of mailing of the international search report
26 June 2013 (26.06.2013)	05 JUL 2013
Name and mailing address of the ISA/US Mail Stop PCT, Attn: ISA/US, Commissioner for Patents P.O. Box 1450, Alexandria, Virginia 22313-1450 Facsimile No. 571-273-3201	Authorized officer: Shane Thomas PCT Helpdesk: 571-272-4300 PCT OSP: 571-272-7774

Form PCT/ISA/210 (second sheet) (July 2009)