Jan 6, 1931. H. M. HALLS 1,787,821

DEHYDRATING PRESS

Filed Oct. 1, 1928 3 Sheets-Sheet 1

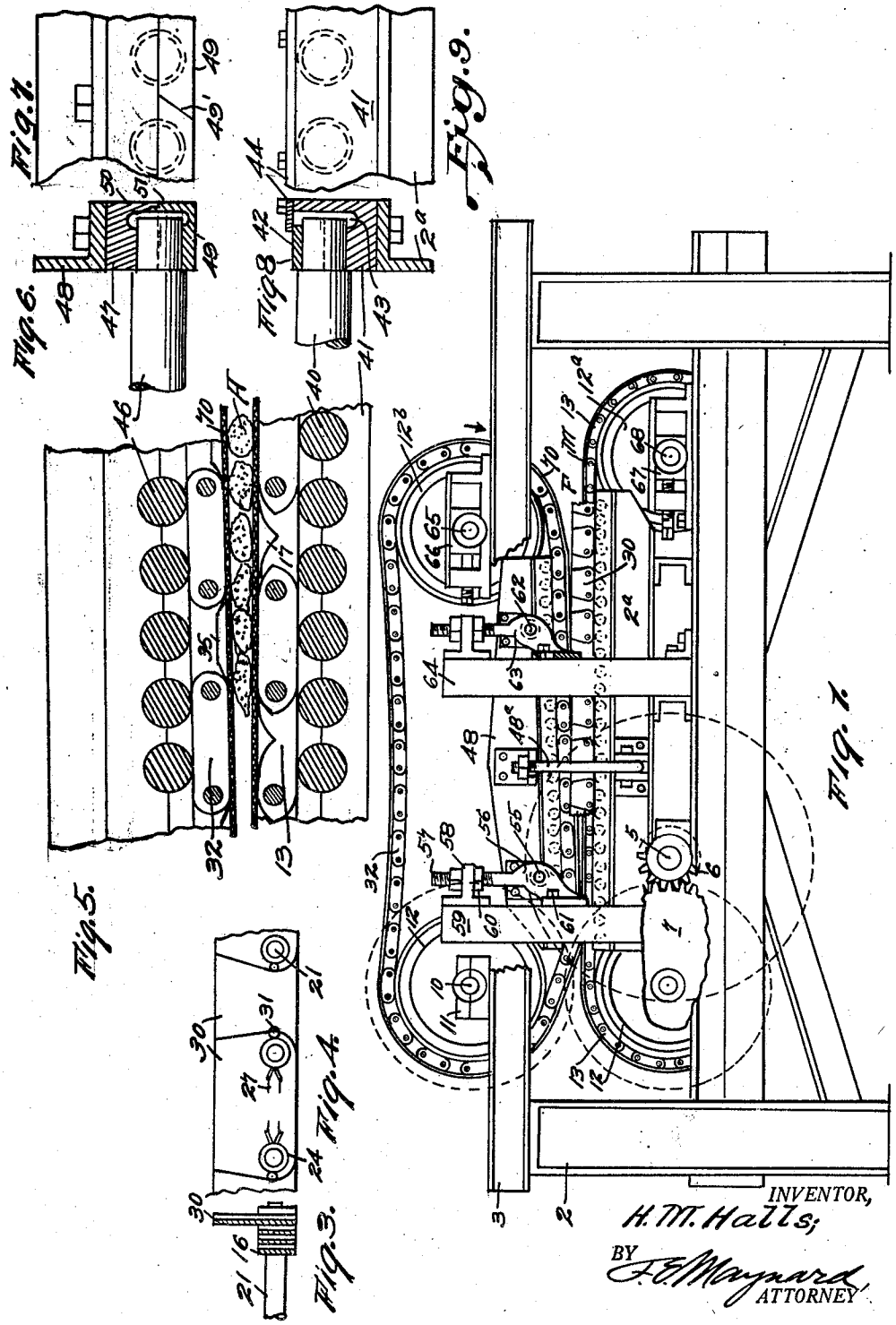

INVENTOR,
H. M. Halls,
BY
F. E. Maynard
ATTORNEY

Jan 6, 1931. H. M. HALLS 1,787,821

DEHYDRATING PRESS

Filed Oct. 1, 1928 3 Sheets-Sheet 2

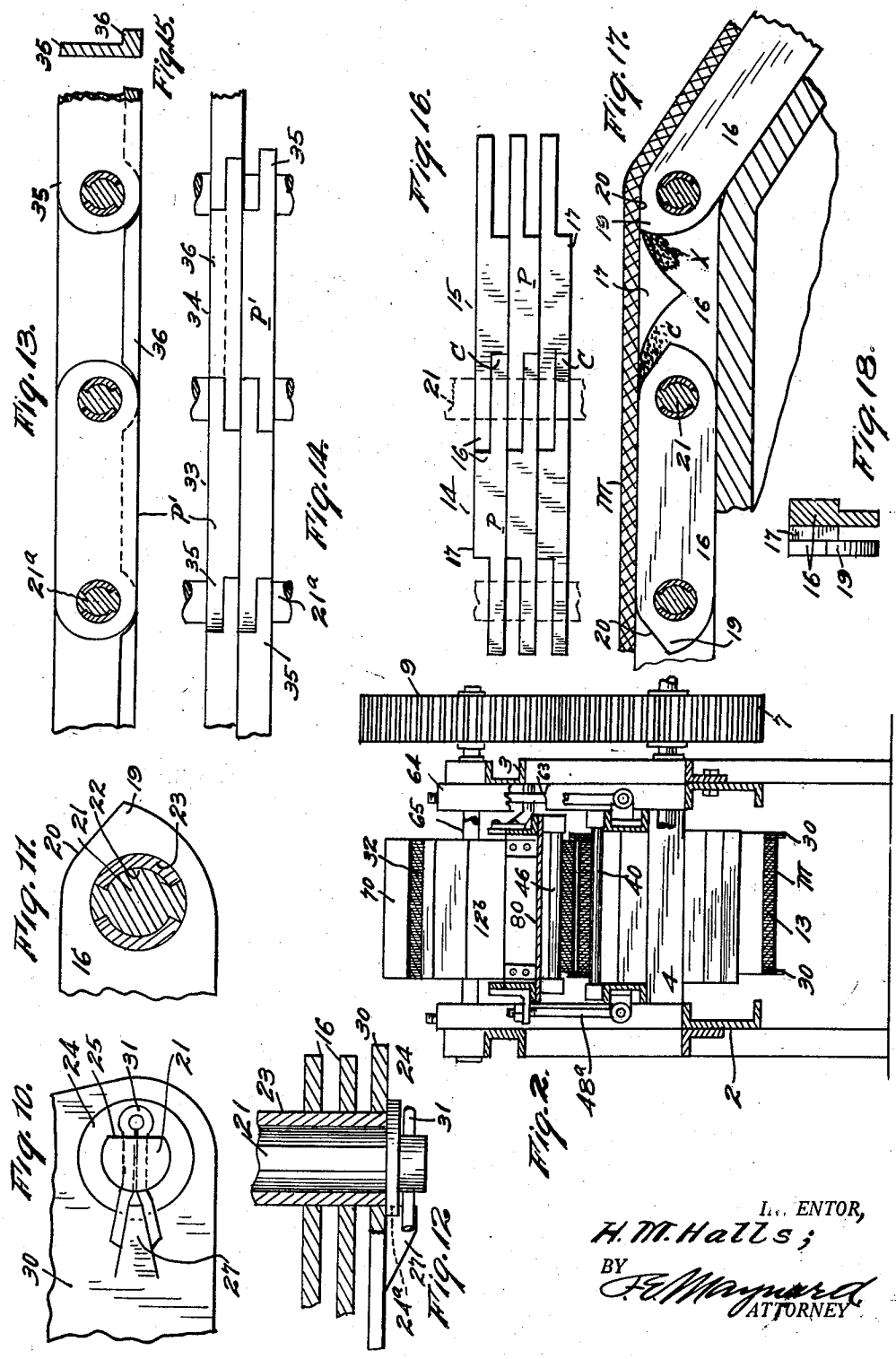

INVENTOR,
H. M. Halls;
BY
F. W. Maynard
ATTORNEY

Jan 6, 1931. H. M. HALLS 1,787,821

DEHYDRATING PRESS

Filed Oct. 1, 1928 3 Sheets-Sheet 3

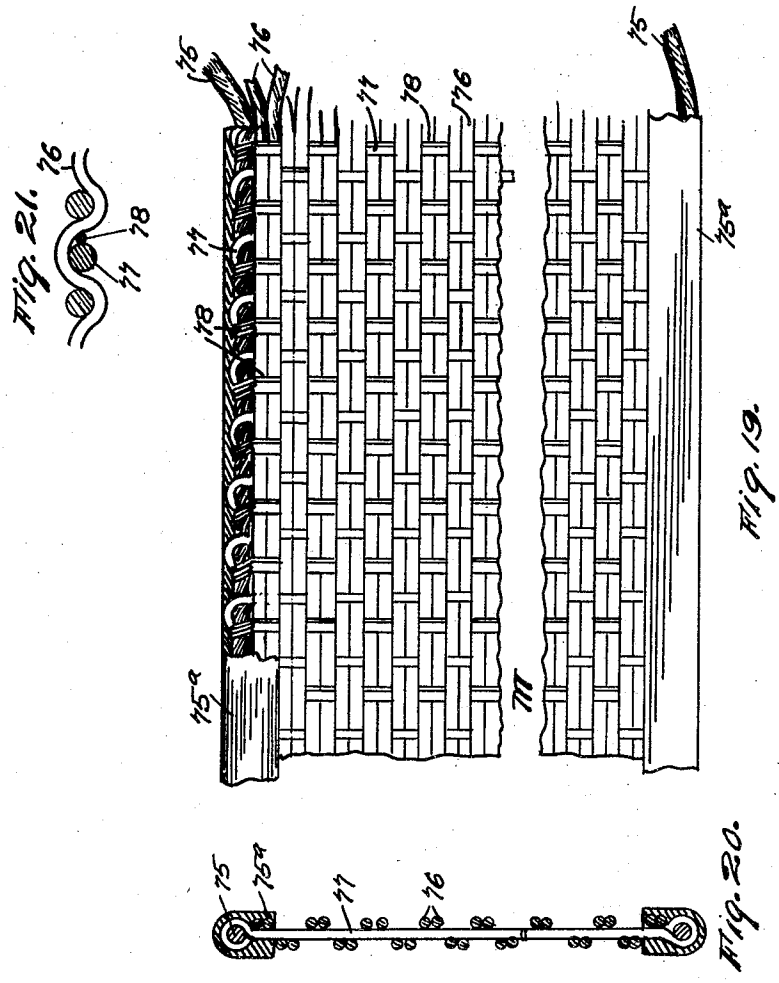

INVENTOR,
H. M. Halls;
BY
C. E. Maynard,
ATTORNEY

Patented Jan. 6, 1931 1,787,821

UNITED STATES PATENT OFFICE

HENRY M. HALLS, OF LOS ANGELES, CALIFORNIA

DEHYDRATING PRESS

Application filed October 1, 1928. Serial No. 309,621.

This invention relates to presses and more especially to dehydrating presses and more particularly to press structures of the character involving upper and lower endless travelling belt means.

It is the general object of the present invention to provide a highly effective and sturdily built endless belt press for the economical and thorough expression of liquid from various materials in a continuous operation and by which the residue is ejected from the machine.

Another object is to provide for the ready adjustment of cooperative presser and platen belts as required according to the character of material being treated.

An additional object of the invention is to provide cooperative belt means and a practical restrictive guide for the belt means.

A further object is to provide a platen belt presenting a substantially plane effective bearing face and which is composed of links of such form and arrangement as to provide ample drain spaces. And in this connection an object is to provide a stationary system of rollers supporting the effective plane stretch of the belt. Also an object is to provide a draining, platen belt whose links are self-cleaning.

A purpose is to provide an endless presser belt whose links are formed and arranged to present a practically imperferate presser face throughout for the efficient application of pressure to a batch of material being treated, and further a purpose is to provide a stationary system of rollers which take the reaction thrust of the effective portion of the presser belt.

A further purpose of the invention is to provide a simple, practicable, and substantial endless travelling strainer mat for a press of this character.

Additional objects, advantages and features of construction of the combination will be made manifest in the ensuing description of the herewith illustrative embodiment of the apparatus; it being understood that modifications, variations and adaptations may be resorted to within the spirit, scope and principle of the invention as it is more directly claimed hereinafter.

Figure 1 is a side elevation, partly in section, of the press.

Figure 2 is an elevation, partly in section, of the driving end of the press.

Figure 3 is a detail section of a portion of the platen belt and its side-wall.

Figure 4 is a side elevation of the side-wall.

Figure 5 is a side elevation and partial section of portions of the upper and lower belts and their supporting rollers.

Figure 6 is a sectional detail of a roller and its bearing, for an upper roller, and

Figure 7 is a side elevation of a fragment of the bearing.

Figure 8 is a detail section of the bearing of a lower roller, and

Figure 9 is a side elevation of a fragment of the bearing.

Figure 10 is an elevation of a pivot rod lock device and associated belt member.

Figure 11 is a cross section of the pivot rod and bearing shims.

Figure 12 is an axial section and plan of the pivot rod rock means.

Figure 13 is a side elevation of a fragment of the upper or presser belt.

Figure 14 is a bottom face view of assembled links of the presser belt.

Figure 15 is a cross-section of one of the presser links.

Figure 16 is a top face view of a group of links of the platen.

Figure 17 is a sectional view of a tumbler pulley showing in elevation the bend of links of the platen and the applied strainer mat.

Figure 18 is a view showing an end elevation and a section of twin links of the platen.

Figure 19 is a plan of the improved strainer mat.

Figure 20 is a cross-section of the mat.

Figure 21 is a longitudinal section of a fragment of the mat.

The operative mechanism is supported in and upon a suitable substantial frame 2 including corner legs and longitudinal beams and cross-girders 4; the frame journalling a driven shaft 5 having a pinion 6 engaging a

lower gear 7 fixed on a cross-shaft 8 and meshing with an upper gear 9 fixed on a head shaft 10 hung in bearings 11 on top rails 3 of the frame.

The shafts 8 and 10 are provided with tumblers 12 one above the other and from the lower tumbler 12 there extends and is driven an endless platen belt 13 composed of staggered gangs 14 and 15 of links 16. These links are duplicate and each presents a flat top edge P and each provided with a side lug 17 whose top face is in the plane of the top edge or face P.

The lug 17 is approximately triangular in form with its sides converging toward the center and each link is provided with an end horn 19 having a top facet 20 so disposed that when the link turns on its pivot rod 21 this facet moves up into the plane of face P. This is for the purpose of dislodging any accretion on the side of the link from under a strainer mat M, Fig. 17; the horn 19 sweeping up close to the near end or corner of an adjacent lug 17. The dislodged material is indicated at X between a lug 17 and the acting horn 19.

When the group of links is passing in a plane stretch from tumbler 12 to the far tumbler 12^a the corners of each lug 17 are so spaced from the near facets 20 that ample drainage channels C are formed between the interlaced links forming the platen 13 so that material A, Fig. 5, being compressed will discharge its liquid component readily through the mat M and through the channels C.

A feature of the press consists of a simple and practicable pivot rod structure for the links of the belts of the press and as shown in Fig. 11 includes a rod 21 having longitudinally extending recesses 22 in which are sunk renewable wear-taking shims 23 which are diametrically opposite with the result that end pull on the links is taken by the shims which can be readily replaced when unduly worn. Means are provided to prevent rotation of the pivot rods 21 with the shims 23 and this includes a washer 24 having a non-circular aperture presenting a flat face 25 matching the reduced flattened end of the rod 21 which extends through an outer link or wall plate (later described) which has a wedge lug 27 adjacent each end.

When the links, as 16, are strung on the pivot rod 21 the sides of the belt are closed by high side guard plates 30 certain of which have the lugs 27 referred to on outer faces and the washers 24 are then applied to the ends of the rods so that notches 24^a in the washers slip over the ends of the lugs 27. This locks the washers against rotation and they in turn lock the rods 21 against turning. Cotter pins 31 pass through the ends of the pivot rods 21 and are jammed on the wedges to retain the washers 24.

Passing from upper tumbler 12 forward to and over a remote tumbler 12^b is the upper effective presser belt 32. This is composed of staggered gangs 33—34, Fig. 14, of links 35 mutually pivoted on pivot rods 21^a which are of similar structure to pivot rod devices 21—23. These links have flat pressure edge faces P^1 with longitudinal, edge building ledges 36 bridging the gap between ends of links 35 of next gangs, so as to form a substantially closed effective pressure face when the links come into a common plane during action on material A in the press.

The presser belt 32 is of a width to pass with working clearance into place over the platen belt 13 and between the side, restricting guard plates 30 of the latter.

Thus a closed face upper presser belt 32 acts above the lower perforated, self-clearing belt 13 to compress the material A.

The effective, acting portion of the belt 13 is supported by a stationary system of parallel, transverse rollers 40 which are mounted in end bearings which are of a design to be as nearly oil leak-proof as may be and yet provide for easy replacement of rollers as needed.

The bearings each include a bottom bar 41, secured on the frame members 2^a, and have a top bar 42 together forming individual journals for the roller ends.

An oil channel 43 opens to the top of the bar 41 and is closed by a cap strip 44; the roller ends hang exposed in the channel for lubrication of the bearing surfaces.

The presser belt 32 has a roller system support including rollers 46 whose ends are respectively journalled inside leak-proof bearings each including a top bar 47 secured to an adjustable backing frame 48. A bottom box bar 49 is attached to the bar 47 face to face between roller ends. The bars have opposite, matched mortise lips 50—51 within which is an oil chamber 52 in which the roller ends are exposed.

These improved roller-end bearings are for the purpose of reducing oil leakage into the product passing from the press.

The upper roller frame or carrier is hung by rear trunnions 55 which are journalled in brackets 56 having screw stems 57 passing freely through lugs 58 on posts 59. The carrier brackets 55 are adjusted to determine the spacing of the rear end of the belt 32 above the platen belt 13 and is then set by the nuts 60. The lower ends of the brackets 56 are clamped by bolts 61 in adjusted position.

The forward end of carrier frame 48 has trunnions 62 and these are mounted in brackets 63 adjustable on and secured to posts 64.

The tumbler 12^b is mounted on a shaft 65 having adjustable journals 66 to permit adjustment of the carrier 48 with its rollers

46 to the desired height and feed angle opening over the platen.

The tumbler 12ª is likewise adjustable by sliding journals 67 carrying its shaft 68.

Preferably the presser belt 32 is overlaid by a snug impervious or liquid proof rubber or other sheet 70 to prevent the liquid expressed from the material A from working into the upper belt fabrication, as far as possible.

It is desirable that the material A be supported on a plane, pervious mat which will not pack unduly into the channels C of the platen belt and will not crumple or fold in ridges laterally or longitudinally on the platen.

A preferred form of bed or mat is shown in Figs. 19, 20 and 21 and consists of strong, fiber selvage ropes 75 and intermediate warp cords 76 laid in pairs one over and under cross-cords 77 over-bound on the selvage ropes. Means are incorporated in the mat weave to transversely stiffen the body and consists of small wire rods 78 lying beside the cords 77 and having their ends wrapped on the ropes 75. Thus if a wire breaks it still is tied to the selvage rope.

A protective deck 80 is secured in the carrier 48 to effectually cover the roller system and lower part of the presser belt.

It will be seen that the press can be readily adjusted to effectually compress the material A to express its liquid and will operate continuously as material is introduced into its feed end F or open mouth and will quickly perform the relative drying or dehydrating process.

The adjustable carrier has adjustable stay braces 48ª attached to the main frame to increase its rigidity.

An advantage of the wear shims on the pivot rods is that while they cannot be lubricated, in view of the nature of the duty, they can be readily renewed from time to time.

The selvage of the strainer mat is preferably bound with a rubber impregnation 75ª.

The bearing strip 49 is shown in Fig. 7 as divided at 49′ into sections of suitable length so that each will support a small number of the rollers which can be removed without disturbing the others.

What is claimed is:

1. In a dehydrating press, a platen belt composed of inter-staggered links set parallel and having side spacing lugs with top faces in the top plane of the belt and which links have end horns movable toward the lugs and having expression facets to register with the top plane of the belt when going around a tumbler, and a strainer mat enveloping the platen belt, said horn operative to express undue accretions from the link spaces adjacent to the ends of the side lugs and under the mat.

2. In a dehydrating press, a platen link belt with staggered gangs of links, pivot rods on which near ends of the gangs of links are pivoted, said links having side lugs bridging the space between companion twin links and which terminate short of the contiguous ends of next gang links so as to form drain channels in the platen face of the belt and expression horns movable into the effective plane of the belt.

3. In a dehydrating press, a platen link belt with staggered gangs of links, pivot rods on which near ends of the gangs of links are pivoted, said links having side lugs bridging the space between companion twin links and which terminate short of the contiguous ends of next gang links so as to form drain channels in the platen face of the belt; the links having horn ends registerable with the top faces of side lugs.

4. In a dehydrating press, a platen device, and a presser belt operative thereover and a supporting frame for said belt, and means for adjusting the frame and including side trunnions on the frame, adjustable brackets, for said trunnions, having screw ends, hangers for said ends, and nuts for setting the bracket ends in the hangers.

5. In a dehydrating press, a platen device, and a presser belt operative thereover and a supporting frame for said belt, and means for adjusting the frame and including side trunnions on the frame, adjustable brackets, for said trunnions, having screw ends, hangers for said ends, and nuts for setting the bracket ends in the hangers, and adjustable tension brackets at the medial side parts of the said frame and including links pivoted at their lower ends to the frame and having upper ends hung in a slotted bracket to facilitate disconnection.

HENRY M. HALLS.