United States Patent [19]

Zucker

[11] **3,795,921**

[45] **Mar. 12, 1974**

[54] **BREAST PROSTHESIS AND BRASSIERE FOR SAME**

[76] Inventor: **Samuel Zucker,** 581-Hungry Harbor Rd., North Woodmere, L. I., N.Y. 11581

[22] Filed: **June 21, 1971**

[21] Appl. No.: **155,135**

[52] **U.S. Cl.** **3/36,** 128/479

[51] **Int. Cl.** **A61f 1/00,** A41c 3/10

[58] **Field of Search** 3/36; 128/462–464, 478–481; 2/267

[56] **References Cited**

UNITED STATES PATENTS

2,953,133	9/1960	Seller	3/36 X
3,114,374	12/1963	Chalfin et al.	3/36 UX
2,435,860	2/1948	Wilkenfeld	128/481
2,851,692	9/1958	Livingston	3/36 XR
3,304,558	2/1967	Mann	3/36
3,447,538	6/1969	Keown	3/36 XR

FOREIGN PATENTS OR APPLICATIONS

1,000,711	8/1965	Great Britain	3/36

Primary Examiner—Richard A. Gaudet
Assistant Examiner—Ronald L. Frinks
Attorney, Agent, or Firm—Lilling & Seigel

[57] **ABSTRACT**

A brassiere is provided with two cups, one or both of which is filled with an integral, artificial breast. Each of such artificial breasts contains a substantially conical outer surface of foamed polyester material, filled with chips of foamed rubber substance to approximate the size and elasticity of the natural breast, and a back panel of flat material covering the base of the conical form. A number of flat leaden weights are attached to the inner surface of the back panel to bring the weight of the artificial breast to that of the portion of the wearer's body it replaces; the artificial breast is permanently attached to the inside of the appropriate cup of the brassiere.

10 Claims, 6 Drawing Figures

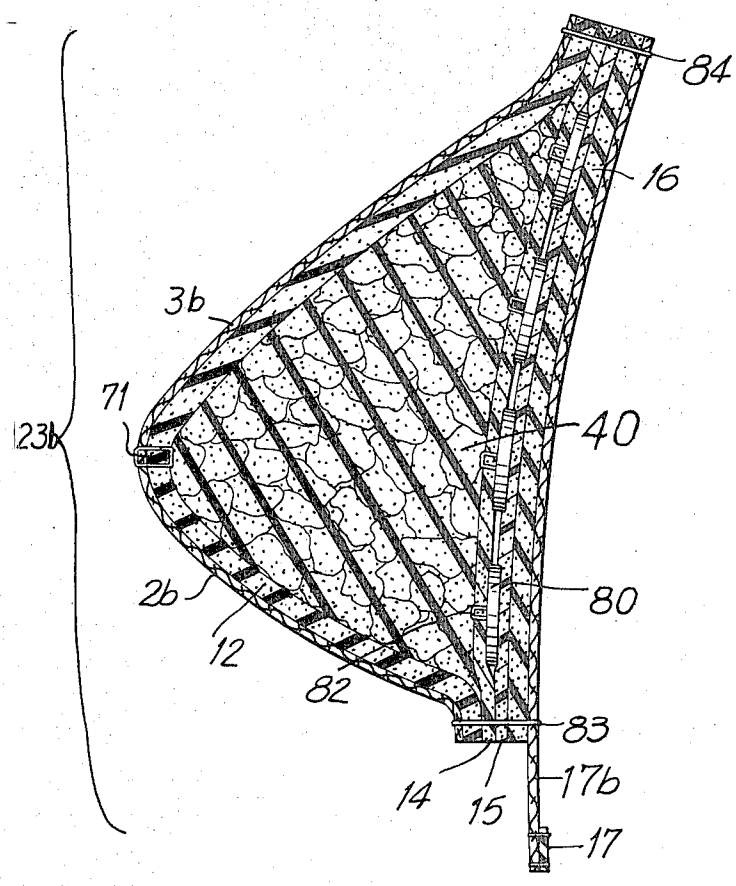

FIG. 1

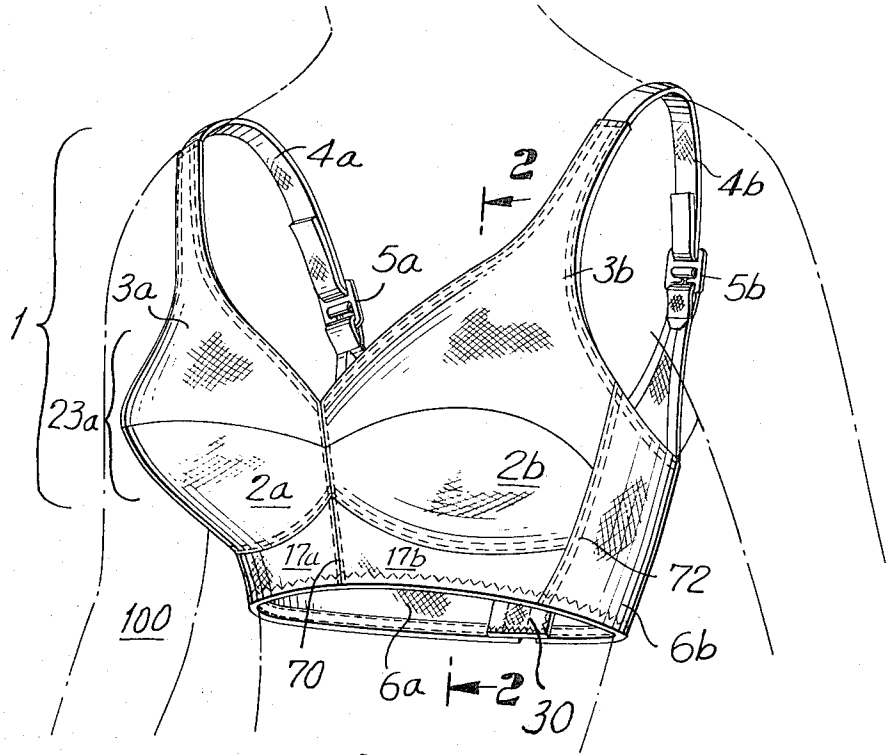

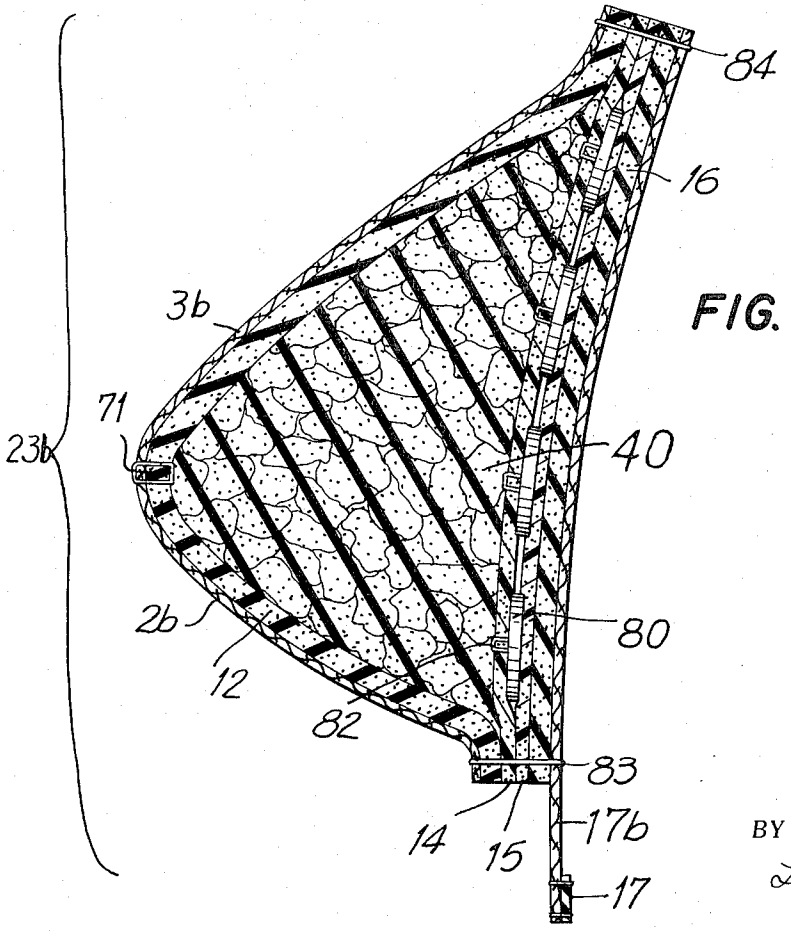

FIG. 2

INVENTOR.
SAMUEL ZUCKER

BY

Lilling and Siegel
ATTORNEYS

FIG. 3

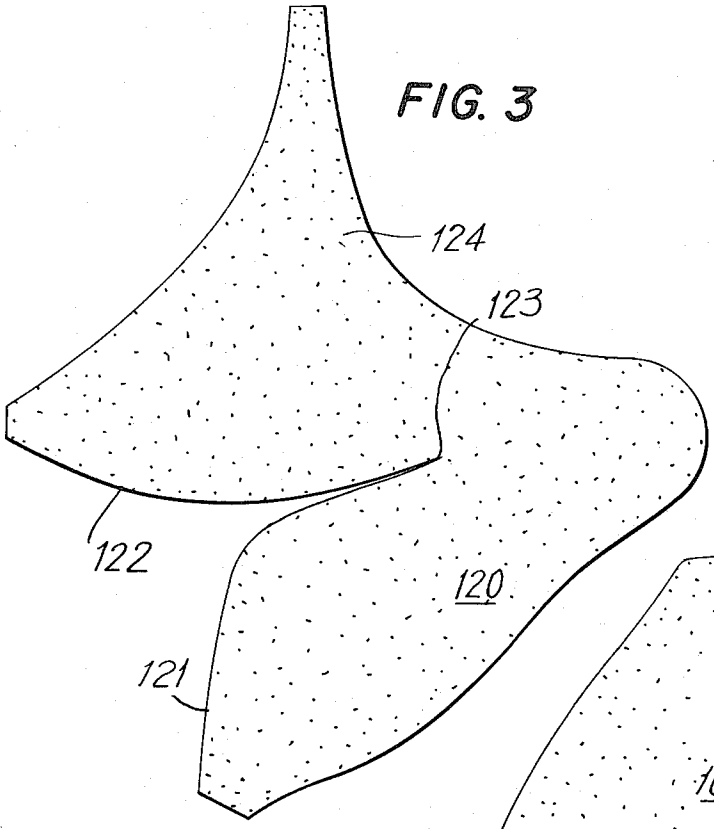

FIG. 4

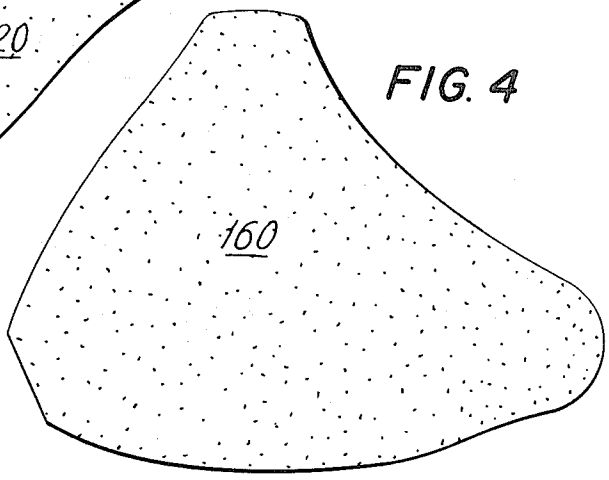

FIG. 5

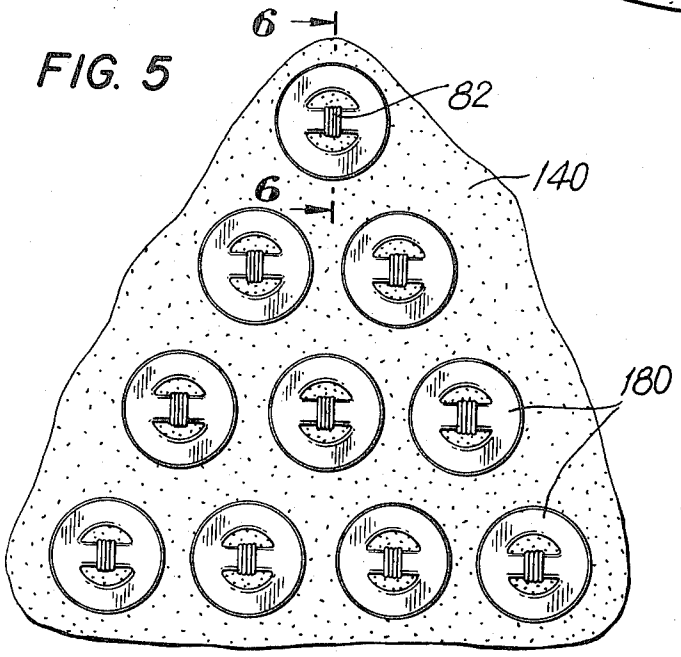

FIG. 6

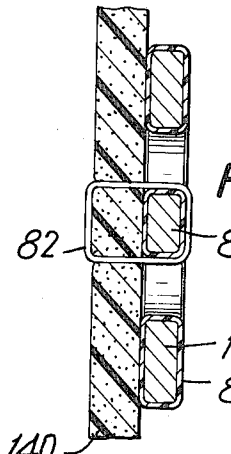

INVENTOR.
SAMUEL ZUCKER

BY

Lilling and Siegel
ATTORNEYS

BREAST PROSTHESIS AND BRASSIERE FOR SAME

BACKGROUND OF THE INVENTION

The present invention relates to prosthetic devices whose purpose is the simulation of the natural bust form of the female figure in the absence of one, or both, of the mammary glands. This requirement may arise as a result of some birth defect or malformation, or, more frequently, as a result of the operation known as mastectomy.

The need and desire of the average woman for support, shaping, and enhancement of the appearance of her breasts has created a large art in the design and manufacture of brassieres of many types; the regrettably high incidence of breast cancer, in many instances cured by the removal of one or both breasts, has also called forth a number of designs and inventions for pads whose shape would mimic the natural form and thus enable the wearer to appear in public without betraying the unsightly and embarrassing absence of a breast.

Many pads of the prior art are specifically tailored to a particular body, most are inserted into conventional brassieres; some require special garments for their support. Also, most of these devices are in some aspect deficient of a full representation of the body part they replace, expensive to purchase and difficult to maintain, by being incapable of cleaning or laundering in a conventional manner, for example.

It is accordingly the prime object of the instant invention to teach the construction of a garment, basically a brassiere of conventional design, with breast pads contained in one or both cups and made integral therewith.

It is a further object of the invention to utilize materials and methods of construction permitting the laundering of such a garment in ordinary household water solutions of soap or detergent chemicals.

It is a still further object of the invention to provide breast pads whose shape, size, weight and firmness approximate these qualities of the natural member so closely that the wearer experiences no discomfort or feeling of unbalance, or a beholder detect any sign that the wearer's bustline is in some sense unbalanced or artificial.

It is also an object of the invention to describe the aforementioned garments and pads, in combinations corresponding to the commercially conventional brassieres in sizing and other attributes, as articles of commerce whose manufacture and distribution provides considerable economic advantages over the designs of the prior art.

SUMMARY

According to the present invention, there is provided a brassiere with a torso-encircling band whose apposite ends are provided with mating parts of a clamp. A pair of bust cups, sized and shaped to enclose and support the breasts of the wearer — here assuming the presence of a normal female torso — are attached to the upper edge of the band and are provided with straps which, after passing over the shoulders, attach once more to the same band.

In the cup corresponding to the missing breast a pad is installed. The size and shape of this pad is governed by the standardized sizes and shapes developed out of the experience of the foundation-garment industry, whereby it may be predicted that most women may be fitted with a brassiere by the definition of two numbers, the total circumference of the chest and the volume of one breast. The first of these is commonly expressed as a dimension in inches, while the second is referred to as the "cup size." Thus, brassieres are manufactured in such sizes as 34–B and 36–C and women, having once informed themselves of the appropriate combination corresponding to their physical dimensions, may purchase such garments by reference to the standardized designations without the need for individual fitting.

Each of these prosthetic pads is provided with outer and inner covers of a foamed rubbery material, suitably urethane, polyurethane or polyester, a filling of granules of the same, or simlar, material, and a weighted panel. The outer cover is shaped into a substantially conical form approximating the shape of the natural breast; the inner cover is a flat member overlaying the base of the cone. The weighted panel fits on the internal surface of the inner cover and is provided with a number of small weights whose sum equals the weight of the natural breast corresponding to the particular pad size, less the weight of the remaining structure of the pad.

The pad assembly is made an integral part of the garment by being stitched, or fastened by other means, into the corresponding bust cup and by the provision of a liner covering the inner surface of the pad and attached to the circumference of the cup.

The function of the weighted panel described above is to provide the feel and response of the missing member to the wearer and thus to remove any muscular strain which may be experienced due to the unsymmetrical distribution of torso weight in the case of a one-sided mastectomy. A further use of these weights lies in removing any unnatural motions of the wearer induced by such an unbalance and observable by an onlooker.

Such considerations are paramount in the provision of a prosthesis for the female breast, since the primary function of such a substitute member is the psychological re-assurance of the wearer that her behavior and movements will not betray her condition, and thereby to allay her inhibitions and fears connected with normal intercourse with other persons who are not aware of her problem and should not be alerted to it.

The invention, and its preferred embodiment, are best described in detail with reference to the accompanying drawings.

BRIEF DESCRIPTION OF THE DRAWINGS

FIG. 1 is a frontal, perspective sketch of a prosthetic garment of the present invention, superimposed on the out lines of a female upper body;

FIG. 2 is a transverse section of the garment of FIG. 1 and its integral breast-pad, taken along line2—2;

FIG. 3 is an outline drawing of the outer cover of the breast-pad, prior to assembly;

FIG. 4 is a similar outline of the inner cover of the breast-pad;

FIG. 5 is a plan view of the weighted panel of the breast-pad; and

FIG. 6 is a section through the panel of FIG. 5, taken along line 6—6.

DESCRIPTION OF THE PREFERRED EMBODIMENT:

FIG. 1 shows an upper female torso **100** in outline, over which a garment **1** is draped and held fast by locking a clasp band **30** as is well known in the art at the back of the body. The garment **1** forms a brassiere with two breast cups **23**, each consisting of a lower cup-front **2** and an upper cup-front **3**. In particular, a right breast cup **23***a* is composed of the elements **2***a* and **3***a* stitched to the corresponding components **2***b* and **3***b* on the left side of the garment at a seam **70**. An upper extension of the element **3***a* is attached to a shoulder-strap **4***a* and the latter is, in turn, attached to a dorsal panel **6***a* stitched to the rightmost edge of the cup **23***a*. The shoulder-strap **4***a*, and its counterpart **4***b* on the left side of the garment, are interrupted by adjustable claps **5***a* and **5***b*, thereby permitting the wearer to vary the location of the breast cups relative to her shoulder-line.

The components recited above present the appearance of a conventional brassiere and provide the outlines of a normal torso, even through, in the present illustration, the wearer has been subjected to a mastectomy of the left breast and the removed body mass is mimicked by a breast pad whose structure is detailed in FIG. **2**.

FIG. **2** is a section through the garment **1** along line **2—2** of FIG. **1**. The externally visible panels, such as lower cup-front **2***b* and upper cup-front **3***b*, are identical in shape and construction to the corresponding elements **2***a* and **3***a*. Contiguous edges of the panels **2***b* and **3***b* are joined to each other and to a breast-shaped cup **12** at the stitched seam **71**; the cup **12** is manufactured from a layer of foamed plastic material — polyurethane for example — of sufficient stiffness to impart to the overlaying panels **2***b* and **3***b* the outline of a normal female breast. Inside the cup **12** a mass of elastic nodules **40** is disposed. These nodules may be chips, tufts or grains of some material, suitably foamed plastic or rubber, which may be readily compacted together to the consistency and elasticity of the female breast, and are held in position by a panel **14**. The panel **14** is the foremost member of the rear wall assembly of the pad and has attached to it a number of weights, typically member **80**, whose sum equals the weight of the breast the prosthesis replaces. These weights may be beads or platelets and take, preferentially, the form of lead buttons, readily attached to the panel **14** by stitching, as at **82**.

The buttons **80** are separated from the torso of the wearer by a liner **15** and an inner cover **16** whose outlines coincide with that of the panel **14** and which are further overlain by a facing-piece **17***b*, a portion of which may extends below the lower cup-front **2***b*. Seams **83** and **84** cooperate with seams **70** and **72** to edge the breast cup **23***b* and to hold the various components of the integral breast-pad in proper position relative to one another and to hold the elastic mass **40** captive inside the garment.

To ensure tight fit of the garment **1** at its lower edge, a stretchable band **17** is stitched to the lower edges of the several elements **6***b*, **17***b*, **17***a*, and **6***a* in succession and encircles the torso upon the fastening of the clasp band **30**.

In FIG. **3** a blank **120** is shown in plan. This blank is provided with arcuate edges **121** and **122** terminating in a cups **123**; these edges being so delineated that upon being brought into conjunction and held together, by means of stitching or glueing the abutting sides, the shape of the cup **12** results. Extension **124** of the blank **120** narrows to the width of the shoulder strap **4***b* to which it is ultimately attached.

FIG. **4** shows a blank **160** whose outlines correspond to the base of the finished cup **12**, and which is utilized for the inner cover **16**; the same outline serves to define the panel **14** and the liner **15**.

It has been mentioned that weights **80** are utilized to approximate the weight of the missing breast, and to ease the physical discomfort attendant upon an unbalanced upper torso. It has also been noted that the breast-pad of the instant invention is readily adaptable to the differing shapes and sizes of the commercially marketed foundation garments.

As a brief illustration of the adaptability of the preferred embodiment heretofore described, the use of such weights **80**, in the form of plastic-coated lead buttons weighing three quarters of an ounce each will be demonstrated.

For the commonest cup-size in the brassiere art, commonly known as cup "C," the weight of the average breast can be derived from the published literature and is listed in Table I, along with the various circumferential measurements of the chest for which brassieres with this cup-size are commonly made; the same table shows the number of weights **80** which would serve to balance the prosthetic garment **1**.

TABLE I

Brassiere Size	Weight of Breast	Number of Lead Buttons (¼ oz.)
32	6 oz.	8
34	7	9
36	8	10
38	9	12
40	10	13
42	11	14
44	12	16

It can be readily determined, by consulting Table I, that, for a breast-pad corresponding to brassiere size 36–C, ten lead buttons, aggregating 7½ ounces, would be required; a possible arrangement of a panel **140** with buttons **180** is shown in FIG. **5** for this particular size. While the relative positioning of the buttons, or weights, **180** is to some extent arbitrary, the approximation of the weight distribution, and not merely of the total weight, of the natural member is a desirable quality in the finished garment and the triangular disposition illustrated in FIG. **5** has been found to provide good results in practice.

It can be readily appreciated that a prosthetic garment according to the present invention is readily manufactured in the conventional sizes of brassieres; with the additional distinguishing mark of having either the left, the right or both cups filled with artificial breast-pads; and distributed in the ordinary channels of commerce with the assurance that a prospective wearer may purchase one off-the-shelf and wear it to the fullest satisfaction without the need for specific fitting.

FIG. **6** is a sectional view of the panel shown in FIG. **5**, taken along the line **6—6**, and shows a typical button **180** with its central cross-bar **89**, the plastic coating **81**, and the manner of attachement by seam **82** passing through the panel **140** and over the cross-bar **89**.

The plastic coating 81 serves as a barrier to the oxidation of the lead material of the button 180 in the hot acqueous solutions in which such garments are commonly laundered.

While the foregoing disclosure has detailed certain materials of construction and details of manufacture, variations from the described embodiment are considered to lie within the scope of the invention.

What is claimed is:

1. A mastectomy brassiere comprising a plurality of panels secured together to form a pair of bust cups and adapted to provide a supporting foundation for the breasts of a woman, at least one soft, porous, machine-washable prosthetic pad permanently forming a part of one of said bust cups; said pad comprising front and rear panel walls of a soft, flexible material secured together along their peripheries so as to construct a bust form, and a plurality of substantially flat and heavy weights immovably positioned in said bust form and means filling said form comprising a plurality of chipped elastic material compacted together to substantially simulate the shape, size, weight and firmness of a natural breast; said plurality of weights having a protective corrosion resistant coating and being secured to a panel fixedly attached to the inside wall of said rear panel, and being arranged on said panel so as to distribute a weight totaling approximately the weight of the natural breast corresponding to the size of said pad so as to present a woman using said brassiere with a feeling of balance and symmetry with respect thereto.

2. The brassiere according to claim 1, wherein said weights comprise metallic button elements sewed to said panel.

3. The brassiere according to claim 2, wherein said button elements are made of lead.

4. The brassiere according to claim 1, wherein said chipped elastic material comprises a foamed plastic material.

5. The brassiere according to claim 2, wherein each of said button elements weight about three-fourths ounce and are coated with a plastic.

6. The brassiere according to claim 2, wherein said button elements are circular in shape.

7. A prosthetic pad or mastectomy form for use in restoring the normal outline of a female upper torso, comprising: a soft, porous, machine-washable prosthetic pad having hollow, flexible cup means of foamed plastic material, whose external outline approximates the shape of a natural breast, filling means of granulated foamed material in said hollow cup means; flexible base means of foamed material, whose outline corresponds to the projection of the base of said cup means, being secured thereto; a plurality of substantially flat and heavy weights having a protective corrosion resistant coating secured to and arranged on one side of said base means so as to be immovably positioned, for simulating the weight of a natural breast; said weights being arranged so as to distribute a weight totaling approximately the weight of the natural breast corresponding to the size of said pad; cover means, similar in material and outline to said base means, attached thereto; said base means, cup means and cover means being secured together and forming a pocket between said cup means and said base means for the entrapment of said filling means and also forming a second pocket between said base means and said cover means for the reception of said weight means; thereby forming an arch-shaped pad having the outlines, weight and stiffness corresponding substantially to the same characteristics of the natural breast.

8. The prosthetic pad according to claim 7, wherein said weights comprise metallic button elements sewed to said base means.

9. The prosthetic pad according to claim 8, wherein said button elements are made of lead.

10. The prosthetic pad according to claim 8, wherein said button elements are circular in shape and are coated with a plastic.

* * * * *