M. W. COLLET.

SHADER FOR CAMERAS.

APPLICATION FILED JAN. 27, 1915.

1,254,579.

Patented Jan. 22, 1918.

3 SHEETS—SHEET 1.

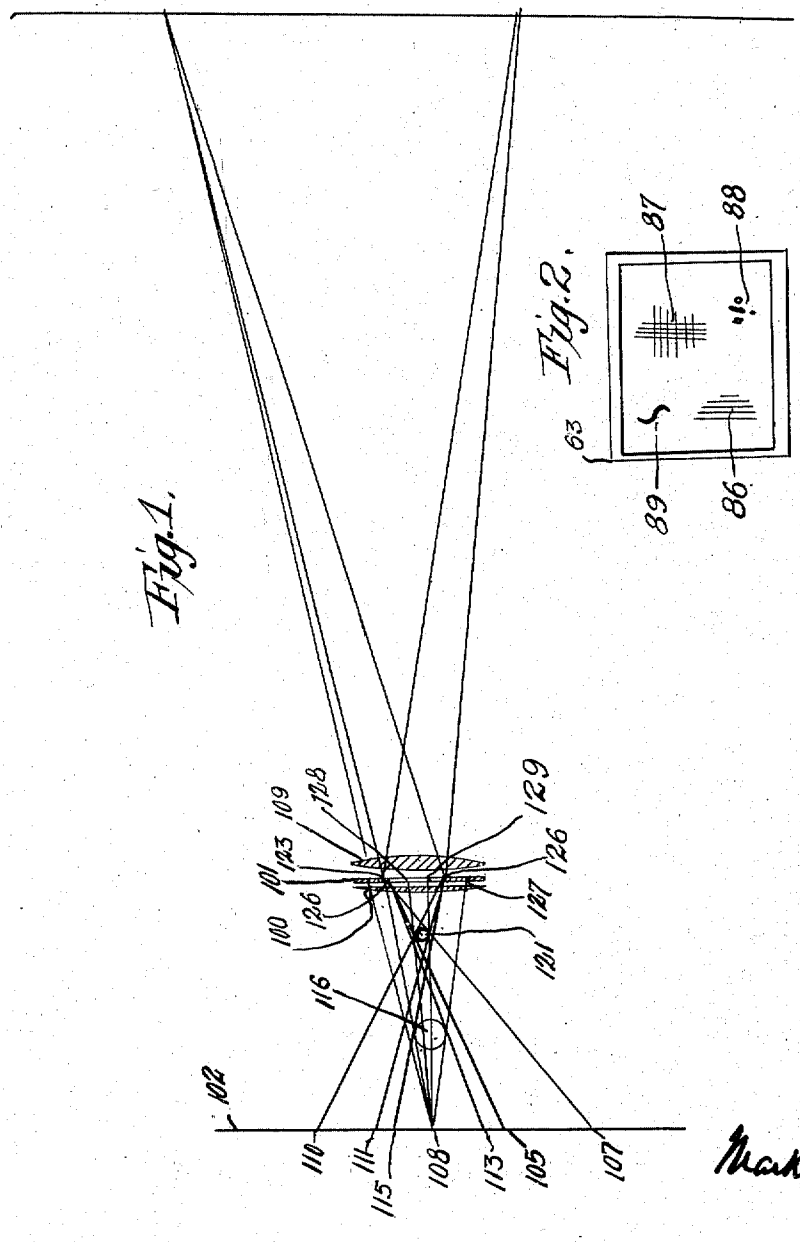

Inventor

Marker Collet

M. W. COLLET.

SHADER FOR CAMERAS.

APPLICATION FILED JAN. 27, 1915.

1,254,579. Patented Jan. 22, 1918.

3 SHEETS—SHEET 2.

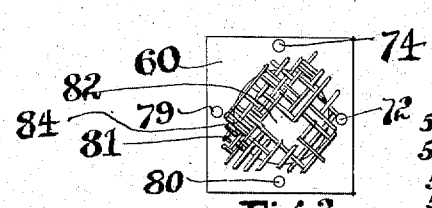

Fig. 3.

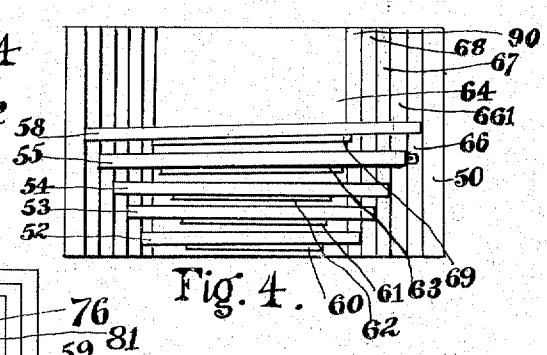

Fig. 4.

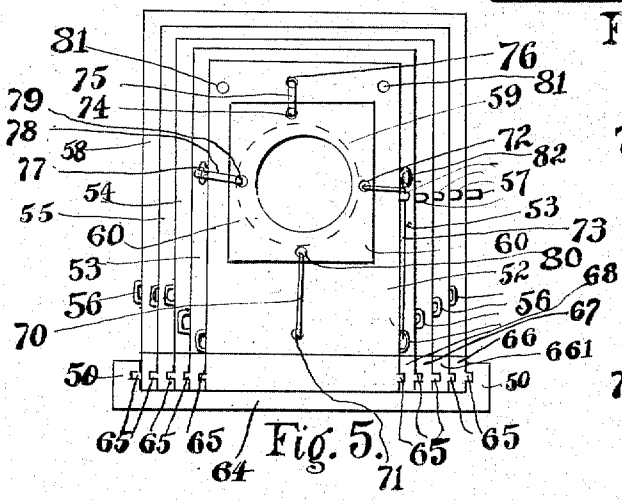

Fig. 5.

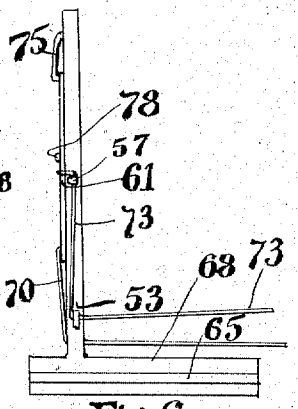

Fig. 6.

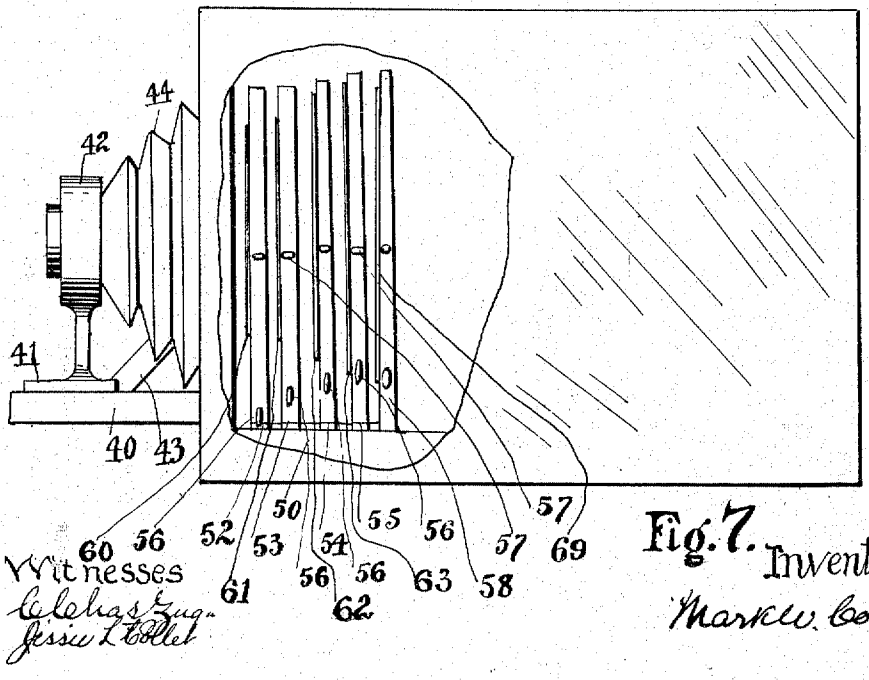

Fig. 7.

Witnesses
Chas. Zug.
Jessie L. Collet

Inventor
Mark W. Collet

M. W. COLLET.

SHADER FOR CAMERAS.

APPLICATION FILED JAN. 27, 1915.

1,254,579.

Patented Jan. 22, 1918.

3 SHEETS—SHEET 3.

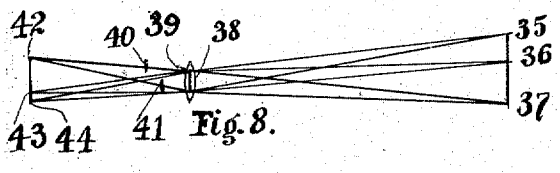

Fig. 8.

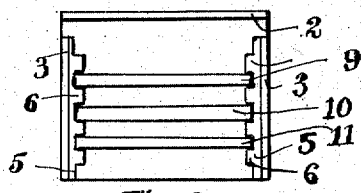

Fig 9

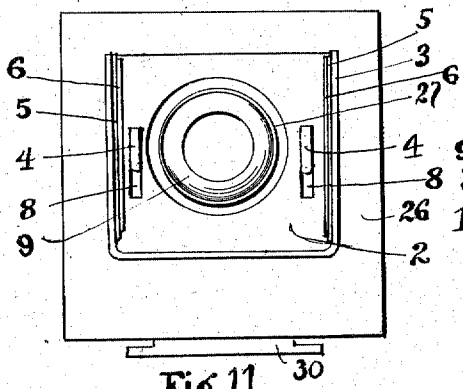

Fig. 11.

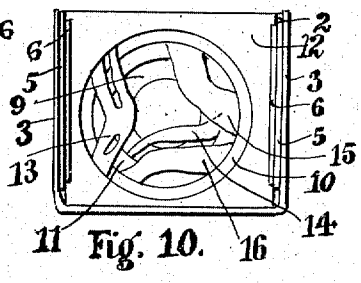

Fig. 10.

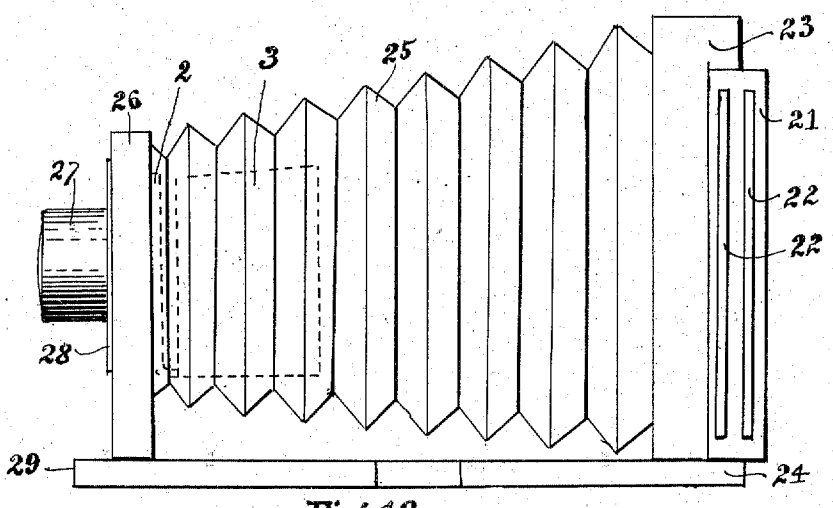

Fig. 12.

Witnesses

Jessie L Collet

C. Chas Zug

Inventor

Mark W. Collet

UNITED STATES PATENT OFFICE.

MARK W. COLLET, OF PHILADELPHIA, PENNSYLVANIA.

SHADER FOR CAMERAS.

1,254,579. Specification of Letters Patent. Patented Jan. 22, 1918.

Application filed January 27, 1915. Serial No. 4,678.

To all whom it may concern:

Be it known that I, MARK W. COLLET, a citizen of the United States, residing at Philadelphia, in the county of Philadelphia and State of Pennsylvania, have invented certain new and useful Improvements in Shaders for Cameras, of which the following is a specification.

My invention is concerned with the direct control of the distribution of the light upon the sensitive plate; by reducing the light received upon a portion or portions of the plate. It is applicable both where there is such a preponderance of light on one or more parts of the plate that detail has to be sacrificed, so as to reduce the light upon the over-lighted portion so that detail can be had on all parts of the plate; and also to bring out detail in some parts of the picture leaving the detail less prominent in others; which latter can be done either by increasing or decreasing the relative amount of light on one part of the picture where detail is sought over the rest of the plate and giving an exposure to suit that part of the plate, and it can be used also to regulate the light or shade to produce high lights where desired.

While my invented device does not attempt to replace the filter by which the relative actinic powers of the color rays can be corrected so that each color will have its due effect upon the plate, it can very frequently be used to correct the picture, where the rays of one degree of actinity are collected at a distinct portion of the plate, by intercepting a greater portion of the light rays of the higher actinic power, *i. e.* making the area in cross-section of the cone intercepted proportional to the over-lighting plus the over-actinity. My device will however always permit the use of a simple filter, homogeneous in character, which will leave the present device to deal with lighting problems only.

By enabling the operator to correct the over-lighting of any part of the image, and to control the distribution of the lighting for artistic effect, the camera becomes in the hands of a skilled and artistic operator nearly as versatile and as much under the control of the artist as the brush and pencil.

Describing now my invented device in detail:—

Figure 1 illustrates, diagrammatically, a section on a plane passed through the axis of the lens and intersecting the plate. Fig. 2 is an elevation of a form of shader-holder with shader. Fig. 3 is an elevation of another form of shader. Fig. 4 is a plan view of a form of shader, holder, carriers, and carrier-holder adjusters. Fig. 5 is a front elevation of same with adjusting devices. Fig. 6 is a side elevation of a shader, shader-holder, carrier, and devices for adjusting the shader and carrier. Fig. 7 is a side elevation of a camera provided with a shading device, the side of the camera being cut away. Fig. 8 illustrates diagrammatically the light cones. Fig. 9 is a plan view of another form of a shader, shader-holder and carrier. Fig. 10 is an elevation of the parts shown in plan in Fig. 9. Fig. 11 is an elevation of the shader-holder-carrier attached to the lens block of a carrier, and Fig. 12 is a side elevation of a camera showing the carrier in dotted lines.

My invention depends upon the fact that each spot on the sensitive plate has directed upon it rays from the entire undiaphragmed area of the lens, which rays form what are called light ray cones, all of which have their common base at the lens but each of which has its apex at a different point on the plate.

The shader, which is the essential element of my invention, intercepts some of the rays of the cones whose apexes lie where the lighting of the image is to be decreased, but it is always placed near enough to the lens to allow a substantial portion of every cone to remain unobstructed. This will result in a lessening of the lighting of the plate at the apex of the cones partially intercepted, and hence a lightening of the negative at this point, and darkening this point in the finished picture, but not in vignetting as occurs when the obstruction is placed too near the plate, and hence obstructs the whole of some of the cones produced. The shader must not intercept light cones that have their apices at points where the high lighting of the plates is to be made. It is essential, therefore, that the shader should not intercept more than a portion of any light cone, and that it should intercept the cones proportionately to the amount of shading desired at the apices of the various cones on the plate, (the whole image on the plate being evidently made up of an indefinite number of apices of these cones.)

Before describing in detail the mechani-

cal construction of the shader and the other parts of the device, it may be noted that from every point on the object to be photographed (see Fig. 8) as 35, 36, 37, a cone of reflected rays of light proceed whose base is the unstopped portion 38 of the lens 39, and that the rays forming these cones are refracted by the lens, and, when properly focused, are formed into cones on the other side of the lens, having apices on the plate as 44, 43, 42. All the rays reflected from the point 36 and impinging upon the unstopped part of the lens meeting at point 43. It is evident an obstruction as 41 intercepting part of each of the cones having their apices at 42, 43, and 44 will diminish the actinic effect at each apex, and hence shade the finished picture at that point, but as it does not cut off the whole of any light cone, it will not vignette the picture. It will shade the point 44, most; 43 nearly as much and 42 but slightly. The obstruction 40 will shade the point 42 slightly but not the points 43 or 44 at all.

It is evident that this obstruction must be placed within the camera back of the lens because, if placed immediately in front of the lens, it will have not any appreciably greater effect in cutting off the rays of a cone whose apex lies in one part of the field than another cone whose apex is in another, if placed as near the lens as it would have to be in order to avoid photographing it. But if placed within the camera it is not photographed, no matter where it is situated, and, as each of the cones within the camera, although having an equal base with the corresponding cone outside, has a very small fraction of the altitude of the latter the intercepting of some of the rays of the cones whose apices form the image at one area of the plate can readily be accomplished without producing any effect whatever on other cones whose apices lie in a different area of the image.

The use of a solid shader that cuts into a light cone from the side of the camera is not capable of the best results, as the shading produced by it is a uniform reduction in lighting toward the edge of the finished picture. The best results are obtained by a shader having obstructions crossing the light cones. These obstructions must be arranged to intercept only a portion of each cone, and of course be close enough to the lens for this purpose. In Fig. 1, 100, 100 is a lens of ordinary construction. 101 is the stop, 102 is the plate. 119, 120, 121, 122, 123 and 124 are the obstructing parts of a shader, 114, 115, 116 are those of another shader; 117, and 134 are obstructions carried by other shaders.

The area of shading effect, the proportion of light impinging upon any point, and the gradation of the shading are diagrammatically shown in Fig. 1. The following rules may be set forth, taking into consideration that the shading is not a vignetting or any shutting off of the whole light at any point:

(1) The area shaded is directly, as the size of the obstruction and practically as the distance of the obstruction from the image. This is readily seen by examining the diagram. This diagram is illustrative and shows a section on a plane including the axis of the lens and cutting the image plane and the lens. Distances on the line 102—107 in which the section plane cuts the image plane can be used fairly to illustrate the extent of the shading upon the image plane along that line from the interruption of rays lying in this section plane. 121 is an obstruction placed near the lens. Drawing lines from the points 123 and 126, which mark the limits of the unstopped part of the lens, so as to intersect one another between the lens and obstruction, and be tangent to the obstruction, these lines will meet the plane of the image at the points 107 and 110. All points in the line between 107 and 110 are shaded by the obstruction. If the obstruction 116 of a larger size farther from the lens have the lines similarly drawn tangentially to it from the points 123 and 126 these lines will meet the plane of the image at the points 113 and 115. The distance 113—115 will measure the length of shading, along the line 107—110, produced by the obstruction 116. Although the obstruction 116 is larger, by being placed farther from the lens, it shades a lesser length on the line 102—107 than the obstruction 121.

(2) The intensity of the shading produced by any obstruction at any point in the image is practically directly as the distance of the obstruction (supposing the obstruction to be of fixed size) from the lens and also directly as the size of the part of the obstruction which lies between the opening of the lens and the point in the image to be considered, if the position of this obstructor is fixed. Take the point 108 and draw therefrom the tangents to obstruction 121, said tangents being continued to the line 123—126 of the lens diaphragm, and intersecting it at the points 128 and 129. The ratio the length of the line 128—129 to the length of the line 123—126, is in proportion to light cut off from the point 108. If similar tangential lines are drawn to the obstruction 116 from the point 108 they will meet the line 123—126 (extended) at the points 123 and 127 and the distance between the points 123 and 127 will exceed the length of the diameter of the lens opening. The resulting ratio of the length of the line 123—127 to that of the line 123—126 will be greater than unity and consequently the obstructor may (dependent on its position) cut off all light rays in the plane of the diagram Fig. 1 from a portion

of the line 102—107. It will do so where tangents drawn to it from the points 123—126, without crossing, meet the line 102—107 within the limit of the image, and there is an appreciable distance between these intersections. The portions between these intersections will be totally cut off from light rays lying in the section plane.

(3) The gradation of the shading depends entirely upon the distance of the obstruction from the lens, the nearer the obstruction is to the lens the more gradually the darkening from the edge of the darkened area to the darkest portion of the shaded area. This is so clear no illustrative diagram is required especially in view of next sub-paragraph.

(4) The shading of the image will be substantially uniform throughout the area of the image plane of the camera bounded by surfaces exteriorly tangent to the obstruction and interiorly tangent to the opening of the lens diaphragm. Take the lines 126—111 and 123—105 and the length 105—111 will indicate the length of the even shading, because, from any point on this line both tangents to the obstruction will fall on the lens line between 123 and 126. The distance 110—111 and 105—117 will indicate the space where the shading decreases from the even shading at 107 and 110.

(5) The shading of any particular point on the plane of the image is the sum of the shading effects upon it of the various obstructions comprised within the cone passing through the aperture of the lens, and the apex of which lies at the point considered. If the axis of this cone lies in the plane represented by the diagram of Fig. 1 the lines 107—126 and 107—123 will be opposite elements of the cone. All of the obstructions included between these lines will affect this point.

(6) The distribution of shading over an area of the plane of the image, will be the composite of the effects produced upon the indefinite number of points composing this area.

As the shading produced by one obstruction easily can be made to overlap the shading of one placed in its neighborhood, a piece of textile material or a series of lines on a transparent medium, often will shade an area much more satisfactorily and with greater precision and delicacy than a single obstruction.

(7) It is readily seen that if any obstruction cuts through and obstructs all the rays forming a cone as above described, the point on the image plane where the apex of this cone falls will be without an image, and if it cuts through a number of cones the area in which the apices of these cones lie will form no image, and the picture be obliterated within this area, therefore the obstruction must be so placed that a substantial number of lines can be drawn from every point on the image plane that will not be intercepted by the obstruction.

The shaders vary according to the effects to be produced. 85 (see particularly Fig. 2) is a shader of glass, celluloid or other transparent material held in the holder 63. 86, 87, 88 and 89 are obstructions formed by drawing lines with ink or paint, and of a shape, location and closeness suitable for the shading desired. The shader can also be formed of an open fabric 84 like a netting, (see Fig. 3) and the shading regulated by drawing out and cutting the threads, leaving it very open in parts 82 and much closer in part 81, or a series of strips of various shapes, 13, 14, 15, 16 (see Fig. 10) form the shaders. The different forms will suit different circumstances.

In all of these shaders, the obstruction carried by them can be considered best singly, that is, each line drawn on a transparent medium and each thread of a fabric as an individual obstruction and the effect of these threads or line considered with reference to the areas, the lighting of which is to be controlled.

The shades should be adjustable so that the lighting of the picture can be arranged accurately. I have secured a very satisfactory adjustment by making the shade holders adjustable vertically, horizontally and toward and away from the lens. I mount the holder 60 from the carrier 52 by the elastic connections 75 and 78 secured in the holes 74 and 76, and 77 and 79 respectively, the cord 70 from hole 80 and passing through hole 71, and the cord 73 from hole 72, passing through ring 57 serving in conjunction with the elastics 75 and 78 for the vertical and horizontal regulations, the carriers themselves being shifted toward and away from the lens. I make these carriers and shader-holders as numerous as desired: In Figs. 4, 5 and 7, I have shown five shader-holders, 60, 61, 62, 63 and 69 carried by the carriers 52, 53, 54, 55 and 58, which are mounted on the runners 90, 68, 67, 6-61 and 66 respectively. Each runner on its outer side is provided with a tongue 65 which slides in a guide in the inside of the next runner, the tongue on the runners 66 sliding in guides in the standards 50 of the carrier holder 64. The friction of the tongues in the guides will ordinarily keep the carriers in the position set. This carrier holder can be placed permanently or removably in the camera just back of the short bellows 44 which will bring it near enough the lens holder 42. The latter is shown mounted on the foot 41 that rests on the folding shelf 40, which is supported by the link 43.

Where so many adjustments are not desired, the shader-holders 9, 10 and 11 (see

Figs. 9 and 10) are merely slipped into slots in a holder 3. These slots are formed between the teeth 6 projecting from the piece 5. The flange 2 fits against the rear of the lens block 26. The slots, 8, 8, allow the hooks, 4, 4, to pass through the flange and hold it against the lens block, which carries the lens case 27 containing the lens 9. The dotted lines in Fig. 12 show the position of the carrier; 25 is the bellows, 28 is the fore plate, 23 the plate holder box, 21 the plate holder with its slides 22, 22, 24 is the back and 29 the front piece of the base board.

The operation of the device is obvious.

I claim:—

1. The combination with a photographic camera having a lens, of a shader having an obstructor cutting off a portion of the light from an area of the image plane of the camera, and placed within the camera at a substantial distance back of the lens, but sufficiently near the lens so that a number of lines can be drawn from every part of the image plane of the camera to the undiaphragmed portion of the lens without being cut by the obstructor whereby, without obliteration of any portion of the image, the intensity of the light thereon may be locally diminished.

2. The combination with a photographic camera having a lens of a shader having obstructors cutting off a portion of the light from an area of the image plane of the camera and placed within the camera a substantial distance back of the lens, but sufficiently near the lens so that a number of lines can be drawn from every point in the image plane of the camera to the undiaphragmed portion of the lens without being cut by the obstructors, whereby, without obliteration of any portion of the image, the intensity of the light thereon may be locally diminished.

3. The combination with a photographic camera having a lens of a shader having an obstructor cutting off a portion of the light from an area of the image plane of the camera and placed within the camera a substantial distance back of the lens, but sufficiently near the lens so that a number of lines can be drawn from every point in the image plane of the camera to the undiaphragmed portion of the lens without being cut by the obstructor whereby, without obliteration of any portion of the image, the intensity of the light thereon may be locally diminished, the said shader being capable of being adjusted transversely to the optical axis of the lens.

In testimony whereof I affix my signature in presence of two witnesses.

MARK W. COLLET.

Witnesses:

J. VERNON PINNO,

JESSIE L. COLLET.

Copies of this patent may be obtained for five cents each, by addressing the "Commissioner of Patents, Washington, D. C."