(No Model.) 2 Sheets—Sheet 1.

J. HOLLINGER.

PIPE COUPLING FOR BOILERS.

No. 377,156. Patented Jan. 31, 1888.

Fig. 5

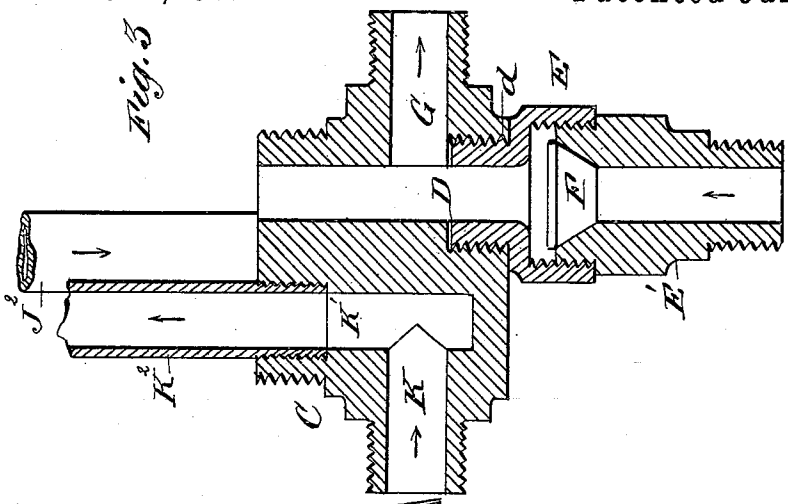

Fig. 2

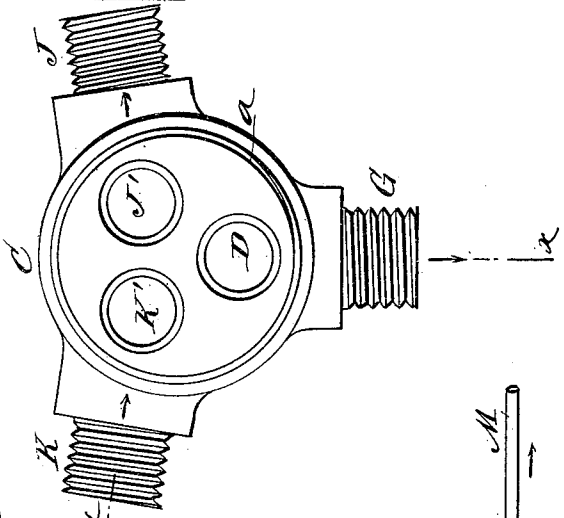

Fig. 1

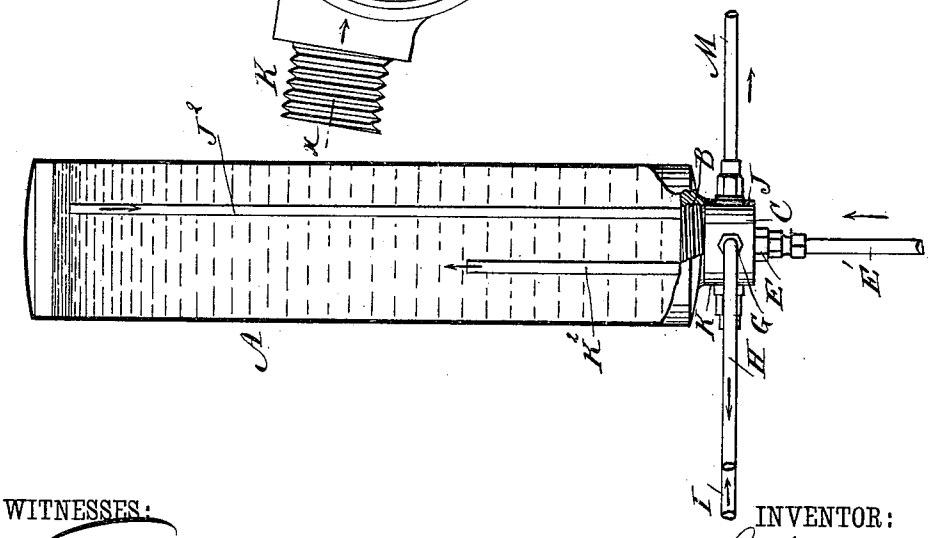

WITNESSES:

C. Neveux

C. Sedgwick

INVENTOR:

J. Hollinger

BY Munn & Co

ATTORNEYS.

N. PETERS. Photo-Lithographer, Washington, D. C.

(No Model.) 2 Sheets—Sheet 2.

J. HOLLINGER.

PIPE COUPLING FOR BOILERS.

No. 377,156. Patented Jan. 31, 1888.

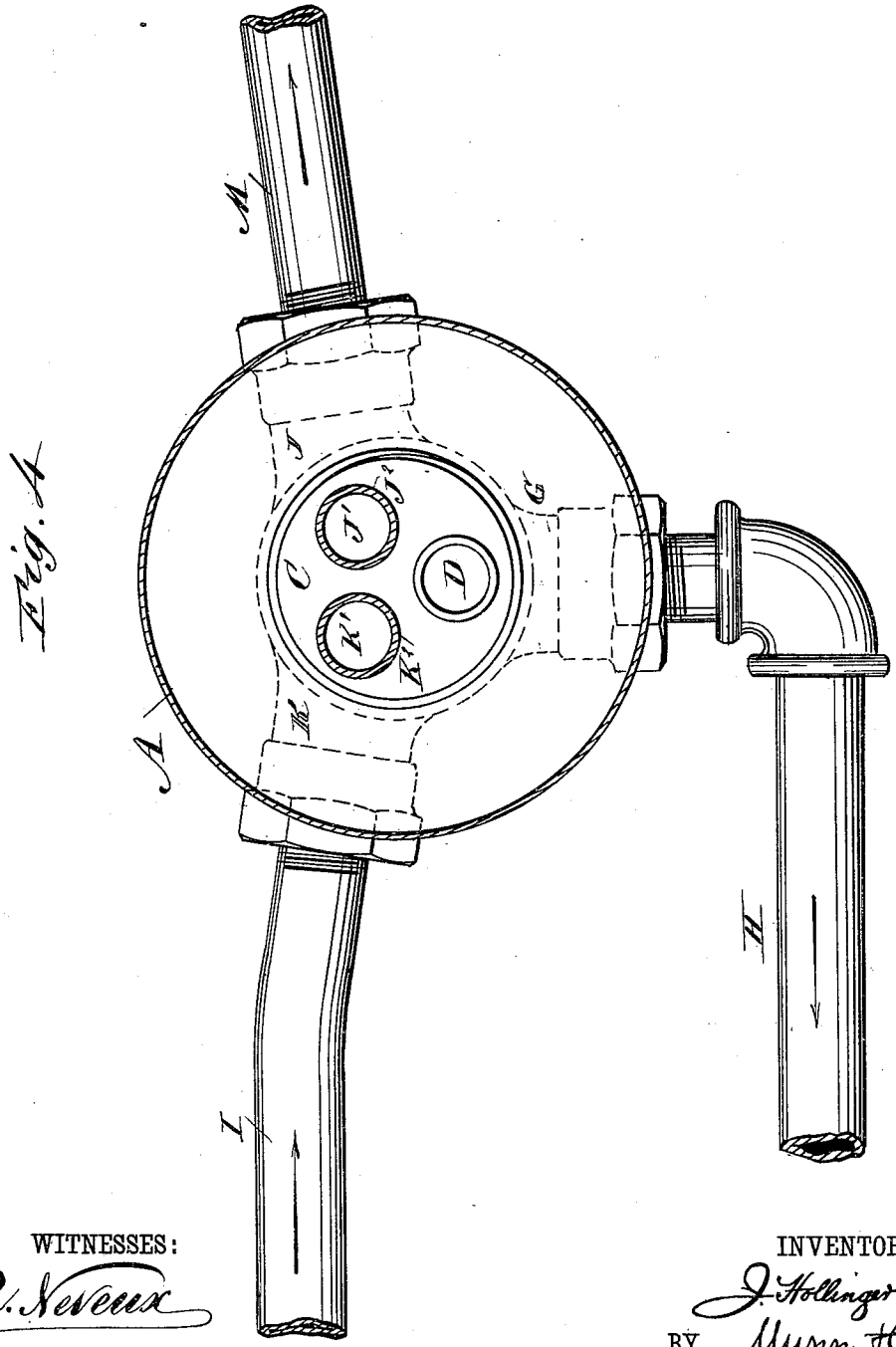

Fig. 1.

WITNESSES:

C. Neveux

E. Sedgwick

INVENTOR:

J. Hollinger

BY Munn & Co

ATTORNEYS.

N. PETERS. Photo-Lithographer. Washington, D. C.

UNITED STATES PATENT OFFICE.

JAMES HOLLINGER, OF NEW YORK, N. Y.

PIPE-COUPLING FOR BOILERS.

SPECIFICATION forming part of Letters Patent No. 377,156, dated January 31, 1888.

Application filed February 2, 1887. Serial No. 226,272. (No model.)

To all whom it may concern:

Be it known that I, JAMES HOLLINGER, of the city, county, and State of New York, have invented a new and Improved Pipe-Coupling for Boilers, of which the following is a full, clear, and exact description.

My invention relates to kitchen boilers; and it consists, principally, of a single opening in the boiler, combined with a coupling in said opening for connecting the various pipes to the boiler.

The invention also consists of the special construction of the coupling, all as hereinafter described and claimed.

Reference is to be had to the accompanying drawings, forming a part of this specification, in which similar letters of reference indicate corresponding parts in all the figures.

Figure 1 is a sectional elevation of a kitchen-boiler having the coupling and pipes connected therewith in accordance with my invention. Fig. 2 is an enlarged plan view of the coupling; and Fig. 3 is a sectional elevation of the same, taken on the line *x x* of Fig. 2. Fig. 4 is an enlarged sectional plan view taken near the lower end of the boiler.

A represents the boiler formed with a single screw-threaded opening, B, at the bottom. In this opening is screwed the coupling C, the same being formed with the screw-threads *a*, to fit the screw-threaded opening B. The coupling C is formed with the vertical passage D through it. This passage is enlarged and screw-threaded at *d* to receive the screw-threaded end of the coupling E, in which is screwed the water-supply pipe E′, a check-valve, F, being fitted in the said pipe E′ and coupling E, to prevent regurgitation or back-flow of water from the boiler. From the opening D leads the side port, G, to which is connected the pipe H, for conducting the cold water to the range. (Not shown.)

I is the return-pipe, which is connected to the horizontal port K in the coupling C. The port K communicates with a vertical passage, K′, made in the coupling, in which is secured the pipe K^2, which projects a short distance up into the interior of the boiler for directing the hot water to the top of the boiler.

J represents a horizontal outlet-port of the coupling, to which is attached the pipe M, for conducting the hot water to a sink or other place for use. The port J communicates with the vertical port J′, in which is fitted the pipe J^2, which reaches nearly to the top of the boiler, so that when water is drawn from the boiler it will be taken from the top, where it is hottest.

Having thus fully described my invention, I claim as new and desire to secure by Letters Patent—

1. As a new and improved article of manufacture, the coupling C, formed with the part provided with screw-threads *a* and with the horizontal ports G J K and the vertical ports J′ K′, communicating with the ports J K, respectively, and the port D, passing through the coupling, and also communicating with the port G, substantially as described.

2. The coupling C, having the range-pipes and the inlet and outlet pipes connected to it in suitable ports in the coupling, in combination with the boiler A, and the pipes K^2 and J^2, connected to the coupling inside of the boiler, substantially as described.

JAMES HOLLINGER.

Witnesses:
H. A. WEST,
C. SEDGWICK.