July 27, 1965 L. L. ARNES ETAL 3,197,179

COLLAPSIBLE JACK

Filed May 15, 1962 2 Sheets-Sheet 1

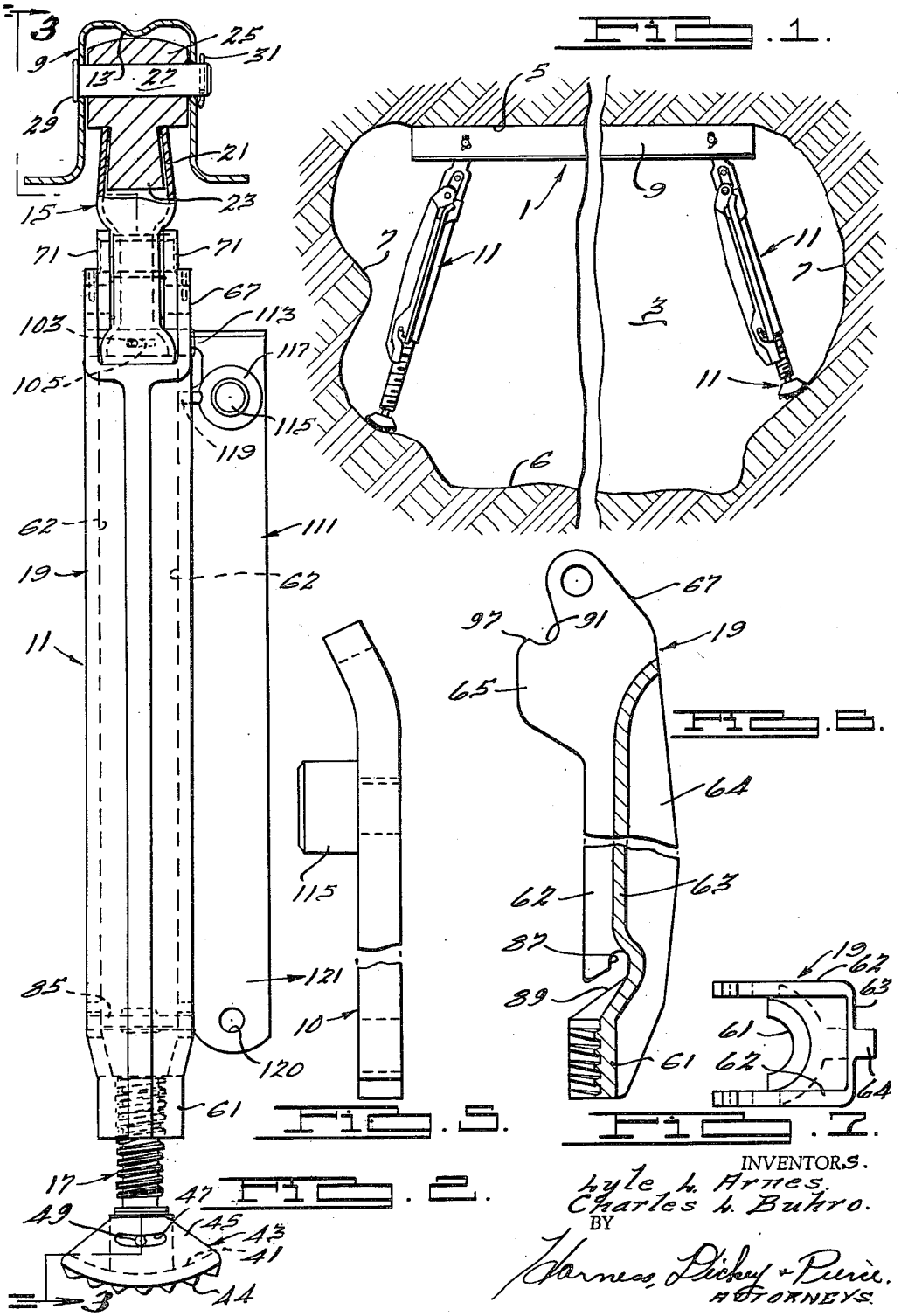

INVENTORS.
Lyle L. Arnes,
Charles L. Burro.
BY
Harness, Dickey & Pierce.
ATTORNEYS.

July 27, 1965 L. L. ARNES ETAL 3,197,179

COLLAPSIBLE JACK

Filed May 15, 1962 2 Sheets-Sheet 2

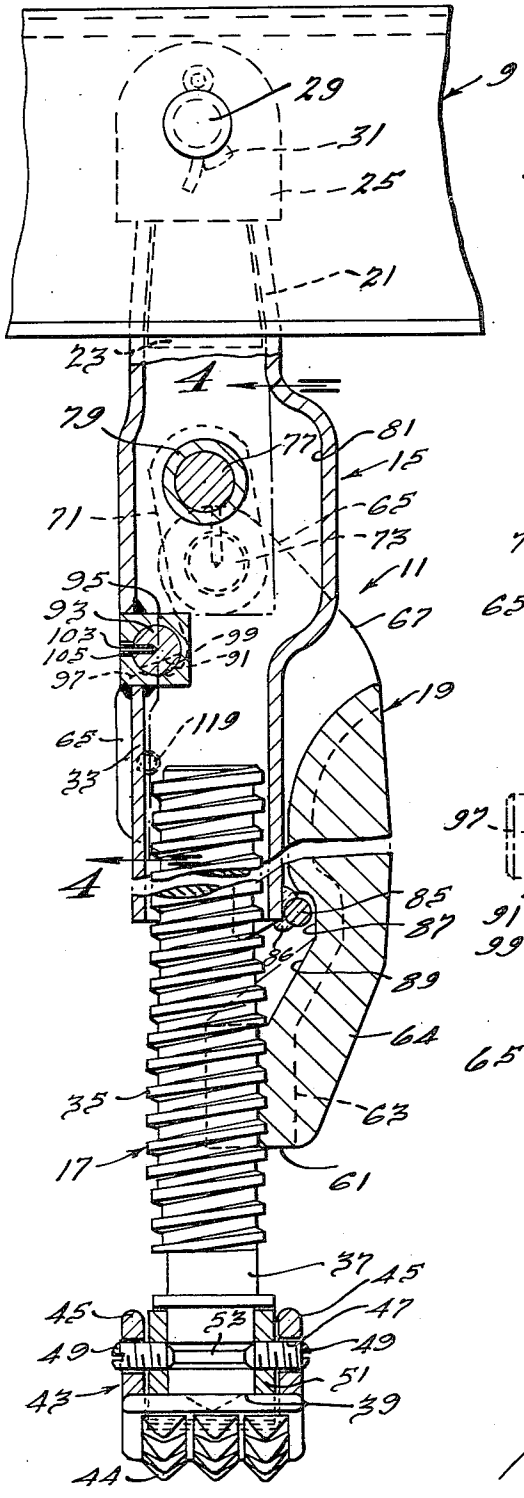

FIG. 3.

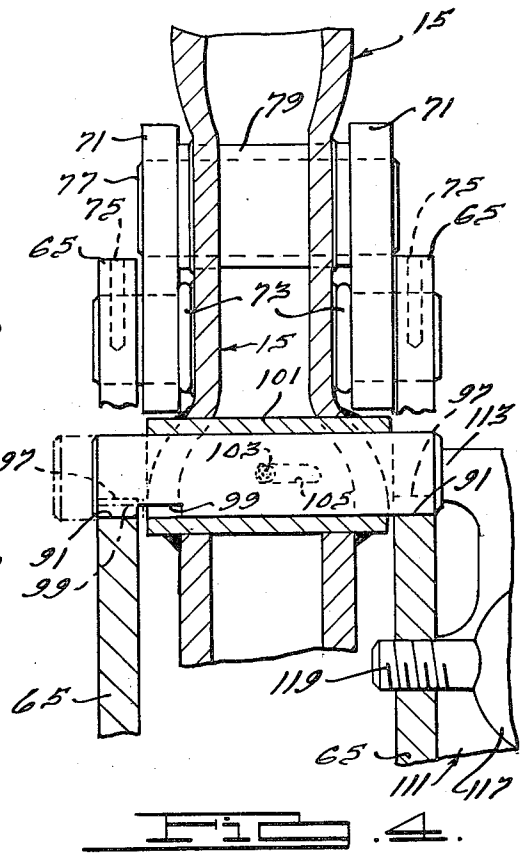

FIG. 4.

INVENTORS.
Lyle L. Arnes.
Charles L. Buhro.
BY
Harness, Dickey & Pierce.
ATTORNEYS.

United States Patent Office 3,197,179 Patented July 27, 1965

3,197,179

COLLAPSIBLE JACK

Lyle L. Arnes and Charles L. Buhro, Racine, Wis., assignors to Walker Manufacturing Company, Racine, Wis., a corporation of Delaware

Filed May 15, 1962, Ser. No. 194,883
11 Claims. (Cl. 254—101)

This invention is a continuation-in-part of our application Serial Number 684,775, filed September 18, 1957.

This invention relates to force applying devices and, in particular, concerns jacks which may be released under load from a remote point.

While the invention may be used in other ways, it has a valuable application in the shoring or support of the ceilings of mines. In such applications there are two conflicting factors to be overcome. On the one hand in order to obtain optimum shoring, it is desirable that the support beam be held under preload against the ceiling; but on the other hand, it is desirable that the shoring be taken down when no longer needed without danger to personnel—meaning that the shoring would be removable by personnel located outside the area of danger due to cave-in when the shoring is released. Also, since shoring is expensive, it is desirable that it be reusable. It should also be compact and composed of as few loose parts as possible to facilitate installation, removal, and stowage. It should also be of such a nature that it can be used under surface conditions that may vary substantially from one installation to another.

It is an object of this invention to provide a mine ceiling support device embodying all the desirable features mentioned above.

It is an object of the present invention to provide a mine ceiling support comprising a beam with jack devices attached to opposite ends for holding it in operative position, the jacks having adjustable and replaceable components enabling them to be used under differing surface conditions and in mines of different heights.

It is an object of this invention to provide a mine ceiling support in which jacking devices permanently attached to opposite ends of a beam can be moved to an inoperative position within the beam.

It is an object of this invention to provide a mine ceiling support device which can be released under load by workers remote from the position occupied by the beam.

A further object is to provide a jack which is collapsible by an initial movement of jack parts which results in automatic disengagement of connecting means preventing jack collapse.

Another object of this invention is to provide a jack comprising a pair of telescopically mounted members which are connected for adjustment relative to one another and for load support by a releasable connecting means which is operable to a disconnected position to permit collapse of the jack in response to an initial movement between the jack members prior to disconnection of the releasable connecting means.

In the embodiment selected to illustrate the principles of the invention, there is a channel-shaped beam to engage the ceiling of the mine that is to be shored. Jack devices are hinged and pivoted near opposite ends of the beam and they can be extended in length so that they will force the beam under load against the ceiling. The jack devices are of such nature that they can be disposed at various angles to the vertical and thus will accommodate themselves to the various surface conditions in the mine. To provide compactness and ready portability, the jack devices can be folded inside of the channel-shaped beam and will not project beyond its sides.

In the preferred embodiment, each of the jacks comprises a pair of telescopically mounted members which are relatively movable between a fully extended position and a completely collapsed position. Jack screw means are provided for adjustable movement of the telescopically mounted members and releasably connect the members in load bearing relationship. In order to release the jack screw means for collapsing movement of the telescopically mounted members, jack screw disconnecting means are provided which are operative in response to an initial collapsing movement between the telescopically mounted members obtained by a linkage means connecting one of the telescopically mounted members and the releasable connecting means. The structural details of each jack comprise a screw device to apply lifting load to the beam which includes a split nut that can be engaged or disengaged from a screw shaft, the latter having an adjustable foot engaging the floor or wall of the mine shaft. A release mechanism is provided which can be remotely actuated to put the nut in condition for separation from the threads of the screw shaft. The load on the jack will act through a toggle mechanism to cam the nut away from the screw shaft thus causing the jack to collapse and permit the shore beam to fall to the floor of the mine so that it can be pulled to the worker and hauled away for reuse.

The drawings show the preferred embodiment which has been selected to illustrate the principles of this invention and in them

FIGURE 1 is a diagrammatic view of the inside of a mine shaft showing the invention in operative position shoring up the ceiling of a mine;

FIGURE 2 is an enlarged view showing the jack pivoted to a portion of the shore beam, the jack being in the same relative position with respect to the beam as in FIG. 1;

FIGURE 3 is a section taken along the line 3—3 of FIG. 2;

FIGURE 4 is an enlarged section taken along the line 4—4 of FIG. 3;

FIGURE 5 is a side elevation of the release lever;

FIGURE 6 is a lengthwise section of the nut; and

FIGURE 7 is an end view of the top of the nut.

As seen in FIG. 1, the mine ceiling support or shore beam and jack construction **1** is employed in a mine shaft **3** which has a ceiling **5**, a floor **6**, and walls **7**. The shoring device **1** comprises a channel-shaped beam **9** and jacks **11** at opposite ends. The beam **9** may be of various configurations but preferably has the hat shape shown in FIG. 3 and is provided with a reinforcing rib **13** running longitudinally thereof.

The jack devices **11** are identical so a description of one will be sufficient. Each device comprises a pair of telescopically mounted members. The first of these members is a hollow sheet metal sleeve **15** which is connected to the beam **9**. The second member is a screw shaft **17** which has a foot to engage the floor or wall of the mine shaft. This element can be of any desired length to suit the height of the mine. Releasable connecting means in the form of an elongated forged, fabricated, or cast split nut construction **19** which threadably engages the shaft **17** and is also connected to the sleeve **15** so that rotation of the screw can apply lifting force to the sleeve and thus to the beam **9**.

Referring now to these and associated parts in detail, the sleeve **15** has a neck **21** at its top end which is compressed around an upwardly and inwardly tapering stem **23** of a fulcrum or head **25**. The head **25** is shaped to pivot inside of the cross beam **9**, the pivot being provided by a cross pin **27** which extends through suitable apertures in the side legs of the beam **9** and which has a head **29** and a cotter key **31** at opposite ends to keep it

from becoming detached from the beam 9. The sleeve 15 can rotate on the stem 23 about an axis perpendicular to pin 27 but is permanently held to the fulcrum 25 by the dovetail engagement of neck 21 with the stem 23.

The lower tubular end 33 of the sleeve 15 furnishes lateral support for the top end of the screw 17 which rotates freely and can move axially within the sleeve 15. The screw 17 has threads 35 and is rotated by a wrench or the like applied to a flat sided portion 37 near the bottom of the screw. Axial load on the screw is transmitted by the bottom 39 thereof into arcuate surface 41 in a self-adjusting foot 43. The bottom 44 of the foot 43 is toothed and convex and the sides 45 are arcuately slotted at 47 to pass set screws 49 which will prevent the foot from falling off the screw. The screws 49 thread through a bushing 51 in which the screw 17 can rotate and the pointed ends thereof fit in the annular groove 53 on the screw 17.

The load receiving surface 41, the bottom 44, and the slots 47 of the foot 43 are all preferably curved about the same center and the foot can therefore adjust itself laterally of the axis of the screw 17. This adjustability, along with rotation about the axis of the screw 17 on bushing 51, will permit the foot to be located so that the teeth on the bottom thereof can dig into substantially any type of terrain and firmly hold the jack in place.

The threads 35 of screw shaft 17 work in a threaded semi-circular bottom portion 61 of the nut 19 as seen best in FIG. 3. The nut 19 has side legs 62 on opposite sides of the screw 17 and sleeve 15 which are joined by transverse web sections 63 to a longitudinal rib 64 all of which extend vertically up from the lower threaded portion 61. At the top of the nut 19, the legs 62 are increased in width to form latch portions or flanges 65 which extend across the full width of the bottom of the sleeve 15. The top of the nut 19, including the latch portions 65, is formed to provide a yoke or forked portion 67 inwhich the sleeve 15 is pivotally mounted. Thus, by rotating the screw 17 in the threaded portion 61 of the nut, lifting force will be applied through the nut 19 to the sleeve 15 by way of the pivotal connection of the yoke 67 with the sleeve.

Linkage means in the form of a pair of toggle links 71 are pivotally connected to the sides of yoke 67 and are pivotally connected to sleeve 15. These are pivoted to legs 65 by means of pivot pins 73 which are headed on the inside ends and project outwardly through the links 71 and apertures in the legs 65 as seen best in FIG. 4. Roll pins 75 may be provided in the legs 65 to hold the pivot pins in place. At their upper ends the toggle links 71 pivot on a pin 77 which extends through a bushing 79 which in turn extends transversely through the side walls of the sleeve 15 and is welded to them. It will be noted that the upper pivot 77 of the links 71 is on the opposite side of the lower pivots 73 from the nut. Thus, when the sleeve 15 and screw 17 are collapsed together, as subsequently described, the links will rotate counterclockwise, limiting the sideward movement of flanges 65 of nut 19, enlargement 81 accommodating movement of the links.

Collapsing movement of the jack is accomplished by an initial collapsing movement between the telescopically mounted members before the releasable connecting means is disengaged. The initial collapsing movement is accommodated by movement of the links 71, as just mentioned, which will have a tendency to disengage the threaded nut portion 61 from the screw threads 35. This disengaging movement is made positive by means of a cross pin 85 which is welded at 86 to the bottom of the sleeve section 33. When the jack is under load the pin 85 will fit in straight slot portions 87 formed in the legs 62 and web 63 of the nut and hold the threads in engagement; but when the sleeve 15 moves down (links 71 pivot up) the pin will move into tapered slot portions 89. It will be seen from FIG. 3 that as a result of engagement of the tapered surface 89 with the pin 85, the nut 19 will be positively cammed out to the right away from the threads 35 to disengage the sleeve 15 and permit it to drop down on the screw shaft 17 thus shortening the over-all length of the jack.

A latch mechanism is provided to prevent such disengagement of the nut 19 from the screw shaft 17 until it is desired; and it incorporates means which permits it to be actuated by personnel quite far removed from the jack. The mechanism includes a latch opening 91 formed on each of the latch portions 65 of the yoke 67 and a latch pin 93 which is carried slidably in a bushing or block 95 that is welded to the side of the sleeve 15 opposite to the main body of the nut 19.

The latch opening 91 comprises a recess or undercut in an upwardly presenting portion of the leg portions 65 that is shaped to provide a lip portion 97 located at a level above the bottom of the latch recess 91. The latch opening 91 is curved so that it will clear and extend around the pin 93, i.e., so that the pin 93 can extend through the openings 91 in the two legs 65 though the bottom of the pin is on a slightly lower level than lip 97. When the pin is in the position shown in FIG. 4, the cylindrical ends of the pin 93 will be disposed in the latch openings 91 and it will catch on the lips 97 to prevent the nut 19 from being rotated in a counterclockwise direction. The pin has a flat 99 on one end and if it is moved to the left in FIG. 4 to the dotted line position, the right hand cylindrical end will move out of right leg 65 and the flat 99 will move into the latch opening 91 of the other leg 65. The flat 99 gives clearance for lip 97 so that both legs 65 are free and the nut 19 can rotate on the links 71 to free threaded portion 61 from the screw shaft 17. Excessive movement or turning of the pin 93 is prevented by a roll pin 103 which is inserted in a central part of the pin and slides in a slot 105 in the bushing 95 to provide a pin guide as seen best in FIG. 2.

While it is evident that the latch pin 93 can be moved lengthwise by an operator standing next to the jack, the invention also provides an arrangement whereby this can be done from a substantial distance. In this arrangement there is an actuator lever 111 which has a nose 113 that engages the end of the pin. The lever has a pivot pin 115 which is pivotally supported by an eye-bolt 117. The eye-bolt 117 is threaded into a tapped hole 119 in the leg 65 of the yoke 67 and turned so that the axis of its opening is perpendicular to the length of the pin 93. At the bottom of the lever 111 there is an aperture 120 to receive a rope or flexible tension member (not shown). When the lever 111 is pulled away from the nut 19 in the direction of arrow 121, the nose 113 will press on the pin 93 and force it to the unlatching position. It will therefore be appreciated that the plane of the lever 111 should lie in the direction of the rope or should be parallel to the direction from which it is sought to release the jack. In other words the pivot pin 115 is perpendicular to the direction from which the release force will come. It may be noted that the eye-bolt 117 and pin 115 will support the lever 111 in operative position even though the jack is disposed on an angle.

In using the mine ceiling support 1, the device is stowed and transported in folded or collapsed condition wherein the levers 111 and eye-bolts 117 are removed and the jacks 11 are folded inside the beam 9. When at the point of use, the mine worker will remove the beam 9 from the truck or transport equipment and unfold the jacks 11 about hinge pins 27. The beam 9 will be raised to the ceiling and, assuming the latch pins 93 are in the unlatched position, the nuts 19 will be swung away from the threads 35 so that the screw shafts 15 will drop to the floor or side wall on which the jacks 11 are to be supported. The feet 43 are adjusted to the proper position and the jacks are rotated about stems 23 to the proper positions for levers 111. The nuts 19 are swung into engagement with the threads 35 and the latch pins 93 are

moved to the right to latch the nut to the sleeve 15. Torque can then be applied to the flat screw portions 37 to force the beam 9 tightly against the ceiling 5, an operator holding stem 23 against rotation if necessary.

When it is desired to remove the beam 9, eye bolts 117 are screwed into appropriate holes in nuts 19 and levers 111 are placed in proper operative position. Cords or lines attached to the levers 111 through the apertures 120 are pulled. This causes the levers to pivot about the pins 115 so that the noses 113 will force the pins 93 to positions where the one end of each pin will clear a leg 65 and the other end will be moved so that the flats 99 are centered with the latch openings 91, thus releasing the legs 65 so that the nut members 19 can pivot away from the threads 35. The load from beam 9 acts downwardly on toggle pivot pin 77 and applies a counterclockwise torque to the links 71 so that the pin 73 starts to move outwardly and upwardly relative to the sleeve 15. Counterclockwise movement of the links 71, permitted by removal of the latch pins 93, will be accompanied in each jack by a reduction in the load applied by the sleeve 15 to the nut and to threads 35 and also by downward movement of the sleeve 15. As the sleeve moves down on the shaft 17, the cross pin 85 will engage the tapered nut surface 89 and since the thread load at this point will be negligible the nut 19 will be cammed out freeing portion 61 from the threads 35 and causing complete collapse of the mine ceiling support. The workers can then fold the jacks 11 into the beam 9 and haul the unit 1 away for stowage or use elsewhere.

What is claimed is:

1. In a collapsible jack, an upper member, a lower screw shaft movable lengthwise relative to the upper member during jacking movement and during collapsing movement, a coupling member connecting said upper member to said screw shaft and having a half nut portion threadably engageable with the screw shaft to prevent collapse of said jack, a link connected to the coupling member and to the upper member and pivotally connecting the coupling member to the upper member and providing for movement of said coupling member relative to said upper member during collapsing movement, said link being connected to said members on axes transverse to the length of the upper member and screw shaft and pivotally connected therebetween, means selectively operable to prevent movement of said coupling member and collapsing movement of said jack and being operable so that a load on the jack renders it movable and causes movement of the coupling member with the motion of the coupling member having components parallel to and transverse to the length of the upper member and screw shaft, and cam means on said members operating between the upper member and coupling member upon relative movement between the coupling member and upper member in an axial direction and acting to move said coupling member on said link in said transverse direction to disconnect the half nut from the threads of the screw shaft.

2. In a collapsible jack, an upper member, a lower screw shaft telescopically mounted with the upper member for relative movement therebetween during jacking movement in one direction and collapsing movement in the other direction, a coupling member having a half nut portion threadably engageable with the screw shaft, means connecting the coupling member to the upper member and enabling the coupling member to move relative to the upper member during collapsing movement with motion having components parallel to and transverse to the length of the upper member and screw shaft, means to selectively prevent collapsing movement of said jack and cam means on said members operating between the upper member and coupling member upon relative movement between the coupling member and upper member in an axial direction and acting to move said coupling member in said transverse direction to disconnect the half nut from the threads of the screw shaft.

3. The invention set rorth in claim 2 wherein said cam means comprises a pin and slot connection, said slot including a non-camming portion acting to hold said nut in threaded engagement with the screw shaft.

4. In a force applying device, a first member, a second member, a coupling member movable to a first position in which it rigidly connects the first and second members for transferring loads therebetween and to a second position in which it disconnects said members to permit collapsing movement therebetween, linkage means connecting the coupling member to one of the members for swinging movement relative to the longitudinal axis of said device, said coupling member having a portion removably connected to the other of the members, said linkage means acting between said coupling member and the one member and providing for longitudinal collapsing movement of the one member relative to the other member by swinging movement from a position extending substantially parallel to the longitudinal axis of said device to a position extending substantially transversely to the longitudinal axis of said device and imparting a disconnecting movement to said coupling member relative to the other member, and latch means acting between said first member and said coupling member to selectively prevent said movement.

5. In a force applying device, a first member, a second member, said first member and said second member being adjustably movable and collapsible relative to one another, coupling means movable to a first position in which is connects the first and second members for adjustable movement and to a second position in which it disconnects said members for collapsing movement, said coupling means extending substantially longitudinally of and being adapted to transmit loads between the first and second members in said first position, releasable connecting means associated with said coupling means and being removably connected to the second member in said first position and preventing complete collapsing movement between said first member and said second member when connected in said first position, linkage means connecting said coupling member to said first member, pivotal connecting means connecting said linkage means to said coupling means and to said first member and providing for an initial collapsing movement of said first member relative to said second member prior to removal of said releasable connecting means and utilizing such initial collapsing movement to cause movement of said linkage means to disconnect said releasable connecting means from said second member, and latch means acting between said first member and said coupling member to selectively prevent initial collapsing movement between said first member and said second member.

6. In a force applying device, a first member, a second member, said first member and said second member being adjustably movable and collapsible relative to one another, a coupling member movable to a first position in which it connects the first and second members for adjustable movement and to a second position in which it disconnects said members for collapsing movement, said coupling member being adapted to transmit loads between the first and second members in said first position, releasable connecting means provided on said coupling member and being removably connected to the second member in said first position, linkage means connecting said coupling member to said first member, pivotal connecting means connecting said linkage means to said coupling members and to said first member and providing for collapsing movement of said first member relative to said second member prior to removal of said releasable connecting means and utilizing such collapsing movement to cause movement of said linkage means to disconnect said coupling member from said second member, latch means acting between said first member and said coupling member to selectively prevent collapsing movement between said first member and said second member, and cam means carried by said first member for engagement

with said coupling member during collapsing movement to positively release said coupling member from said second member.

7. The force applying device as defined in claim 5 and wherein said latch means includes a force multiplying actuator adapted to be operated by a flexible tension member attached thereto.

8. A jack comprising a sleeve member, a screw shaft member telescopically received within said sleeve member, said jack being movable between an extended position and a collapsed position by relative axial displacement between said sleeve member and said screw shaft member, coupling means for providing a releasable connection between said sleeve member and said screw shaft member, half nut means provided on said coupling means and being releasably threadably engageable with said screw shaft member for causing displacement of said sleeve member relative to said screw shaft member in response to relative rotative movement between said screw shaft member and said half nut means, connecting means connecting said coupling means to said sleeve member and providing the coupling means with motion having components parallel to and transverse to the longitudinal axis of said sleeve member and said screw shaft member in response to relative sliding movement between said sleeve member and said screw shaft member toward said collapsed position, and cam means operative upon relative sliding movement between said sleeve member and said screw shaft member toward said collapsed position to engage said coupling means and positively move said coupling means about said connecting means transversely to the longitudinal axis of said sleeve member and said screw shaft member to disconnect the half nut means from said screw shaft member to permit complete collapse of said jack.

9. In a collapsible jack or the like, a pair of telescopically mounted load bearing members movable between an extended position and a collapsed position, a coupling member extending longitudinally of and adapted to rigidly connect and maintain said members in an extended position under load, thread means provided on one of said

members, nut means provided on said coupling member and being releasably engageable with the thread means provided on said one of said members to obtain relative rotative movement therebetween for adjustment thereof in said extended position, linkage means connecting said coupling member to said other of said members for imparting jack extending movement to said other of said members in response to relative rotative movement between said nut means and said thread means and for releasing said nut means from engagement with said thread means by movement of said nut means upwardly and outwardly relative to said one of said members, means to selectively prevent collapsing of the jack and pivotal connecting means to connect said linkage means to said coupling member and to said other of said members and being located to cause actuation of said linkage means to release said nut means in response to an initial collapsing movement of said members to permit complete collapse of said jack.

10. The invention as defined in claim 9 and including cam means carried by said other of said members for engaging with said coupling member in response to collapsing movement of said members to positively release said nut means from said thread means.

11. The invention as defined in claim 9 and wherein latch means are provided to secure said nut means to said thread means to positively prevent initial collapsing movement of said members until said latch means is released.

References Cited by the Examiner

UNITED STATES PATENTS

988,948	4/11	Reinhard	61—45
1,226,444	5/17	Barber	61—45
1,721,227	7/29	Manley.	
2,504,291	4/50	Alderfer	254—98
2,548,844	4/51	Myers	254—98

WILLIAM FELDMAN, *Primary Examiner.*

JACOB L. NACKENOFF, *Examiner.*