March 4, 1952 W. R. WALSH 2,588,184

TOY ROCKET BOMB

Filed Aug. 18, 1947 2 SHEETS—SHEET 1

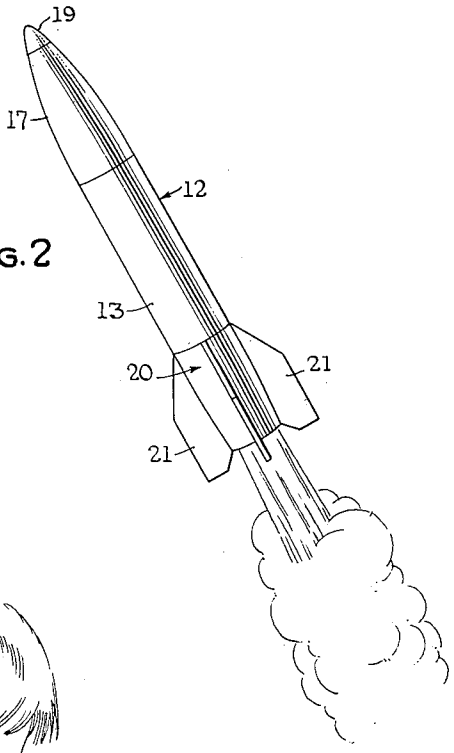

Fig. 2

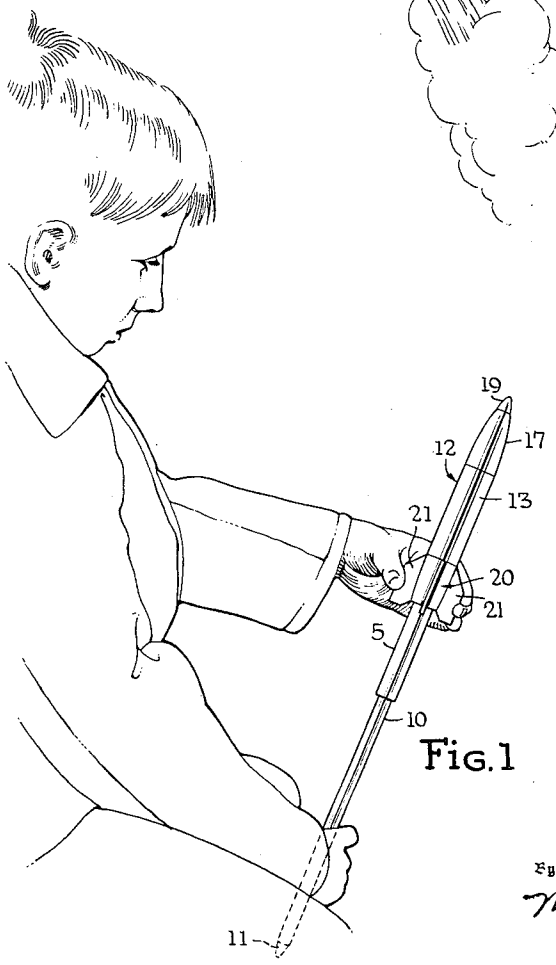

Fig. 1

Fig. 3

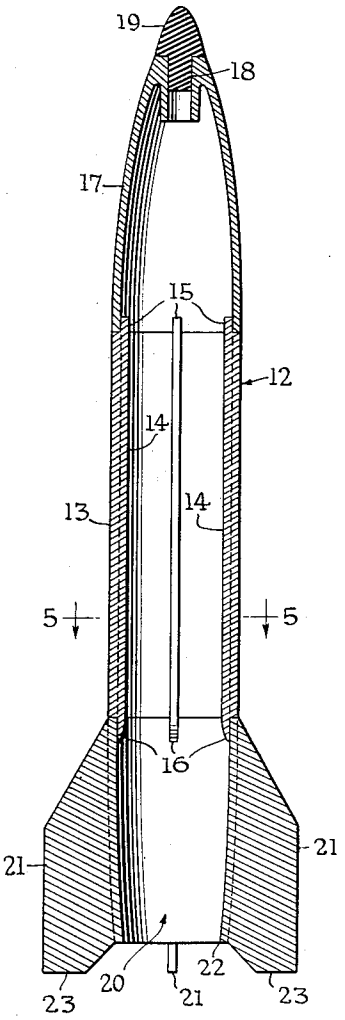

Inventor
William R. Walsh

By
Mason, Porter, Miller & Stewart
Attorneys

March 4, 1952

W. R. WALSH

2,588,184

TOY ROCKET BOMB

Filed Aug. 18, 1947

2 SHEETS—SHEET 2

Fig. 4

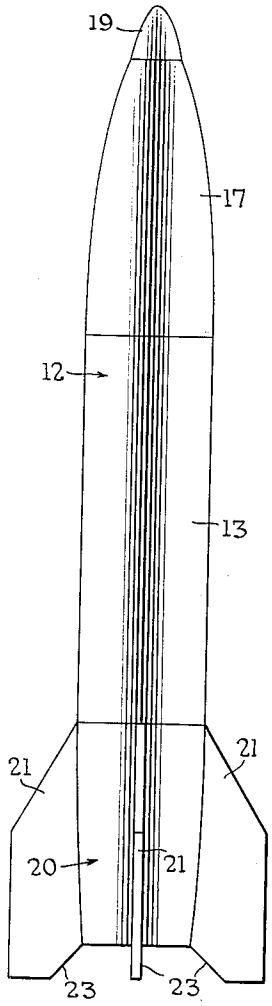

Fig. 6

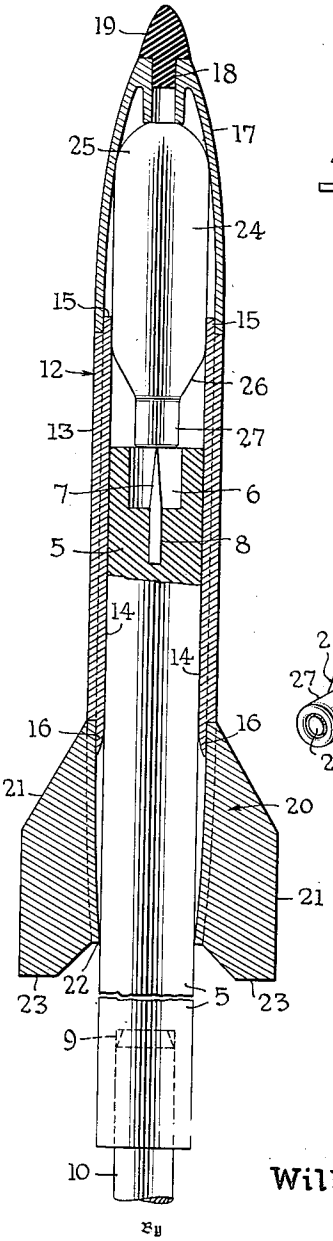

Fig. 5

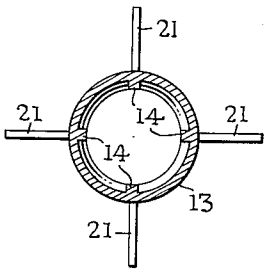

Fig. 7

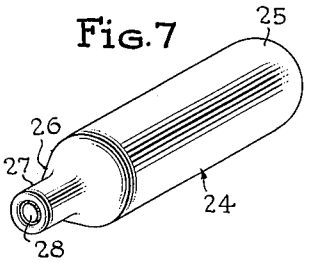

Inventor

William R. Walsh

By

Mason, Porter, Veller & Stewart

Attorneys

Patented Mar. 4, 1952

2,588,184

UNITED STATES PATENT OFFICE

2,588,184

TOY ROCKET BOMB

William Remington Walsh, East Orange, N. J.

Application August 18, 1947, Serial No. 769,255

7 Claims. (Cl. 46—74)

1

The invention relates generally to toys and primarily seeks to provide a novel free flying projectile in the form of a toy rocket bomb which is propelled through the air by a rapidly expanding gas released from a cartridge carried by the bomb.

An object of the invention is to provide a toy rocket bomb device comprising, in combination, a streamlined hollow shell-like bomb element having flight stabilizing fins at its tail end and provision for frictionally retaining therein a compressed gas containing cartridge, and a flight launching and guiding stick having provision for puncturing the cartridge to permit the gas to be discharged therefrom and from the tail of the bomb element to initiate and sustain the flight thereof.

Another object of the invention is to provide a hollow shell-like bomb element of the character stated having internally projecting, longitudinally extending, circumferentially spaced ribs therein effective to engage and frictionally hold a gas cartridge within the element in position for facilitating smooth flight of the element, said ribs also being engageable with the exterior of the launching stick in a manner for definitely determining the direction of flight of the element.

Another object of the invention is to provide a bomb element of the character stated in which the internal ribs terminate short of the tail end of the element, and the interior wall of the element at the tail end portion is constricted slightly to concentrate the escaping gas and facilitate the jet propulsion effect thereof, the minimum diameter of said wall corresponding to the circle in which the inner walls of the ribs lie, thereby to cooperate with said ribs in the flight guiding contact with the launching stick.

With the above and other objects in view that will hereinafter appear, the nature of the invention will be more clearly understood by reference to the following detailed description, the appended claims, and the several views illustrated in the accompanying drawings.

In the drawings:

Figure 1 is a perspective view illustrating the invention, the launching process being shown.

Figure 2 is a perspective view illustrating the bomb element in flight.

Figure 3 is a detail central longitudinal section illustrating the bomb element.

Figure 4 is a side elevation.

Figure 5 is a detail cross section taken on the line 5—5 on Figure 3.

Figure 6 is a view similar to Figure 3 and illustrating a gas cartridge and the launching stick in place just prior to a launching of the bomb element in flight, a portion of the end of the launching stick being broken away and in section.

2

Figure 7 is a detail perspective view illustrating a gas cartridge.

In the practical development of the invention, there is provided a toy device comprising three elements, namely the bomb element, the launching stick and the propelling gas cartridge.

The launching stick is formed in two parts, one comprising a cylindrical body 5 having a cylindrical cavity or bore 6 in its top end into which a sharp pin 7 projects, the body of the pin being embedded in the stick as at 8. The body 5 also has a bore 9 in its lower end into which the smaller diameter mounting stick 10 may be removably inserted, and the lower end of the stick portion 10 may be sharpened as at 11 so that the launching stick structure may be mounted erect, or at a desired angle by insertion in the ground in the manner indicated in Figure 1.

The bomb element generally designated 12 preferably is formed of molded plastic but may comprise a light hollow shell formed of other suitable material, such as light weight metal. When the element 12 is formed of plastic, it is preferably constructed of three sections secured together in end abutting relation by a suitable cement. The central or main body section 13 is in the form of a cylindrical shell having a plurality, four being shown, of inwardly directed, longitudinally extending, circumferentially spaced ribs 14. The ribs extend a short distance from the upper end of the shell as at 15 as illustrated in Figure 3, and they similarly extend as at 16 from the lower end of the cylindrical shell and are tapered off in the manner clearly illustrated. A streamlined nose 17 is cemented in abutting relation to the upper end of the shell 13 in the manner clearly illustrated in Figures 2 and 3 and said nose is formed to include an end socket 18 into which a rubber bumper 19 is inserted.

A tail piece 20 is cemented in abutting relation to the lower end of the central shell 13 and is provided with a plurality, four being shown, of flight stabilizing fins 21. The inner shell wall is constricted, as at 22, and it will be observed that the inner diameter of the tail shell at its lower extremity is the same as the circle in which the inner walls of the central section ribs 14 lie. It will also be apparent by reference to Figures 2 and 3 of the drawing that the stabilizing fins 21 extend a short distance below the end extremity of the tail shell 20 as at 23.

One of the compressed gas containing cartridges **24** is shown in place in the bomb element in Figure 6, and in detail in Figure 7, and in these illustrations it will be apparent that each said cartridge includes a cylindrical main body portion having a half-rounded end portion **25** at one end extremity thereof. At its other end the cartridge is reduced in diameter as at **26** and terminates in a reduced diameter cylindrical portion **27** of a size for fitting within the cavity or bore **6** formed in the top end of the launching body stick **5**. The cartridge may be of the type well known in the home carbonization of beverages and containing highly compressed CO_2 gas sealed within the cartridge shell by the readily puncturable soft metal seal **28** secured in the reduced diameter end portion **26**.

When it is desired to launch the toy rocket, the launching stick may be assembled in the manner illustrated in Figure 1 by suitably inserting the lower end of the stick **10** in the ground and the upper end thereof in the receiving bore **9** in the lower end of the cylindrical stick body **5**. A cartridge such as is shown in detail in Figure 7 is then inserted in the bomb element with the rounded end extremity **25** thereof centered in the nose **17** and against the stop provided by the bumper socket **18**, and with the lower end portion of the cylindrical body of the cartridge frictionally held within the ribs **14**. See Figure 6.

By now mounting the bomb element over the upper end of the launching stick body **5** in the manner illustrated in Figures 1 and 6, and by forcing the same downwardly along the guiding body **5** with sufficient force to cause the cartridge end **26** to enter the body bore **6** and cause the pin **7** to puncture the cartridge seal **28**, the bomb element may be launched in the direction guided by the launching stick body **5** and its contact with the longitudinal ribs **14** and the lower end extremity of the tail shell **20**. The rapidly expanding gas released from the punctured end of the cartridge will impinge against the end of the mounting stick body **5** and then upon rapidly escaping from the constricted end extremity of the tail piece **20** will initiate and sustain free flight of the bomb element by jet propulsion, the fins **21** on said tail piece serving to stabilize the flight.

It will be apparent that the cartridge **24** will be frictionally retained in the bomb element during flight by its engagement within the ribs **14**, and the cartridge is so positioned within the bomb element as to place the main body of the weight well forward in a manner for facilitating smooth flight of the free projectile. It will be apparent also that the provision of the cavity or bore **6** in the top end of the launching stick body **5** and the mounting of the pin **7** therein in the manner illustrated in Figure 6 serves as a safety measure assuring against inadvertent pricking of the fingers of children playing with the toy.

While one form of the invention has been shown for purposes of illustration, it is to be clearly understood that various changes in the details of construction and arrangement of parts may be made without departing from the spirit and scope of the invention as defined in the appended claims.

I claim:

1. In a device of the character described, a launching stick having a cylindriform bomb element receiving and flight guiding top portion, and a gas cartridge closure puncturing pin at the end extremity of said top portion, said end extremity having a cavity therein completely encircling the pin and of a size for receiving a reduced diameter end portion of a gas cartridge having a puncturable closure and said pin being of a length for extending approximately to but not beyond the stick end extremity so that the cavity will be effective in protecting handlers of the stick from having their fingers inadvertently pricked by said pin.

2. A toy rocket bomb comprising a streamlined hollow shell-like element having flight stabilizing fins at its tail end and a plurality of longitudinally extending inwardly directed circumferentially spaced ribs therein effective to engage an external cylindrical portion of and frictionally retain a gas cartridge when inserted therein and also to engage in flight guiding contact with a launching stick when it is intended to launch the bomb into free flight, and the tail end of the element being open.

3. A toy rocket bomb comprising a streamlined hollow shell-like element having flight stabilizing fins at its tail end and a plurality of longitudinally extending inwardly directed circumferentially spaced ribs terminating short of the tail end of the shell, and the interior wall of said shell adjacent its tail end being constricted slightly to an end diameter substantially the same as the circle in which the inner limits of the ribs lie, and the trail end of the element being open.

4. A toy rocket bomb comprising a streamlined hollow shell-like element having flight stabilizing fins at its tail end and a plurality of longitudinally extending inwardly directed circumferentially spaced ribs, a gas cartridge in said shell, and said shell also including a stop means therein effective to engage the gas cartridge and place the same well forward in the shell in position for having its weight so distributed as to facilitate smooth flight of the bomb, and an opening through its tail end through which to emit gas.

5. A toy rocket bomb comprising a streamlined hollow shell-like element having flight stabilizing fins at its tail end and a plurality of longitudinally extending inwardly directed circumferentially spaced ribs terminating short of the tail end of the shell, a gas cartridge in said shell, and the interior wall of said shell adjacent its tail end being constricted slightly to an end diameter substantially the same as the circle in which the inner limits of the ribs lie, and said shell also including a stop means therein effective to engage the gas cartridge and place the same well forward in the shell in position for having its weight so distributed as to facilitate smooth flight of the bomb, and an opening through its tail end through which to emit gas.

6. A toy rocket bomb device comprising, in combination, a streamlined hollow shell-like bomb element having flight stabilizing fins at its tail end and an opening through said tail end through which a compressed gas cartridge and a launching stick can be inserted and through which propelling gas from the cartridge can be emitted, a compressed gas cartridge in said shell-like element and having a discharge outlet directed toward said tail end opening and normally closed by a closure puncturable to permit emission of gas through the tail opening, and a flight launching and guiding stick having a cylindrical portion extending into the tail opening and embraced by said element and having provision for puncturing the cartridge closure to permit the gas to be discharged therefrom to initiate

and sustain flight of said element, said element having a plurality of longitudinally extending inwardly directed circumferentially spaced ribs engageable with the exterior of the cartridge for frictionally retaining it in said element and also closely approximating the exterior of the cylindrical portion of the launching stick for guiding the flight of said element.

7. A toy rocket bomb device as defined in claim 6 wherein the means for puncturing the cartridge comprises a fixed pin carried by the launching stick in position for engaging with and puncturing the cartridge closure, said pin projecting into but not beyond a cavity formed in the end of the launching stick received in the bomb element, and said cartridge having a reduced diameter end portion in which the cartridge closure is provided and which is receivable in said cavity.

WILLIAM REMINGTON WALSH.

REFERENCES CITED

The following references are of record in the file of this patent:

UNITED STATES PATENTS

Number	Name	Date
D. 138,912	Bye	Sept. 26, 1944
263,407	Hicks	Aug. 29, 1882
279,539	Chamberlain	June 19, 1883
409,943	Emmens	Aug. 27, 1889
1,492,159	Caretta	Apr. 29, 1924
2,375,314	Mills	May 8, 1945
2,398,391	Orkin	Apr. 16, 1946

FOREIGN PATENTS

Number	Country	Date
574,536	Great Britain	Jan. 9, 1946