May 14, 1935. T. J. SCOFIELD 2,001,217

MEANS FOR COMPENSATING FOR TEMPERATURE CHANGES IN PIEZO ELECTRIC CRYSTAL DEVICES

Filed July 21, 1933

FIG. 1

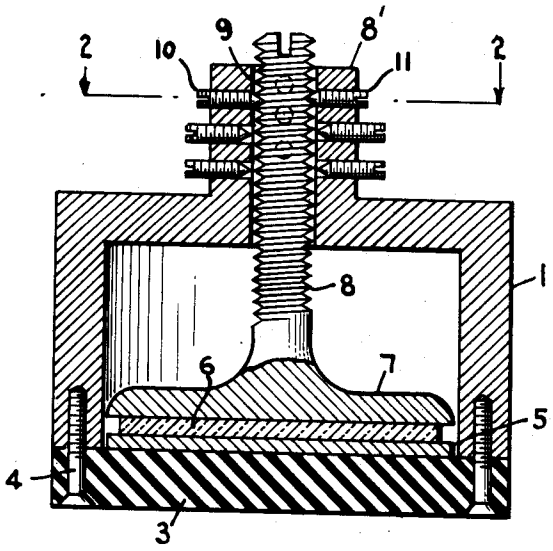

FIG. 2

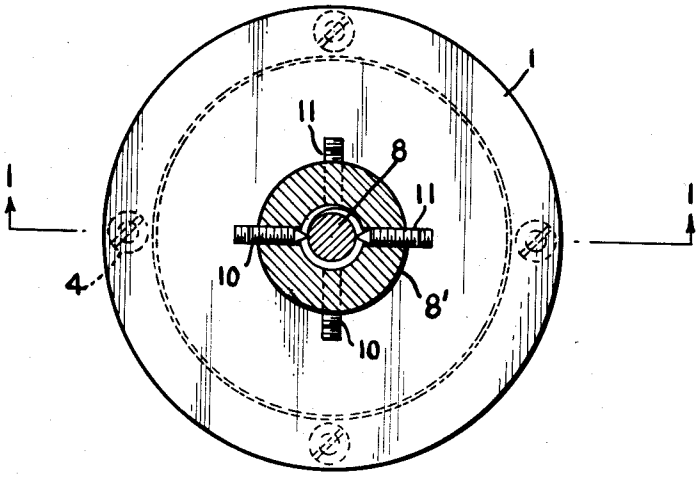

INVENTOR
Theodore J. Scofield
BY Ira J. Adams
ATTORNEY

Patented May 14, 1935 2,001,217

UNITED STATES PATENT OFFICE

2,001,217

MEANS FOR COMPENSATING FOR TEMPERATURE CHANGES IN PIEZO-ELECTRIC CRYSTAL DEVICES

Theodore J. Scofield, Jackson, Mich., assignor, by mesne assignments, to Radio Corporation of America, New York, N. Y., a corporation of Delaware

Application July 21, 1933, Serial No. 681,469

2 Claims. (Cl. 171—327)

This invention relates to piezo electric crystal devices for control of oscillator frequencies, tuning circuits and kindred uses.

It is well known that the oscillating frequency of the quartz crystal decreases with increase in temperature. It is also well known that the crystal oscillates best when not under compression, in fact, a space of about one-thousandth of an inch is provided at the side of the crystal to give it freedom in oscillations. If this space is decreased, for example, by increase in temperature, the frequency of oscillation of the crystal is lowered.

On account of these two characteristics of the quartz crystal, increase in temperature of the crystal and the mounting decreases the free space adjacent the crystal and lowers its period of oscillation and increase in temperature of the crystal itself lowers its period. Lowering of the temperature of the crystal and associate parts has a reverse effect.

It accordingly has been the practice to mount crystals in enclosures with automatic means for holding the temperature constant within very narrow limits, particularly where the frequency of radio transmitters are being controlled by the crystals. The maintaining of a constant temperature around a piezo electric crystal is expensive in apparatus and maintenance and it is desirable to obviate the use of such temperature controls.

In the application of Stuart W. Seeley, Serial No. 681,487, filed July 21, 1933, means have been described for automatically compensating for temperature changes in a crystal control device.

It is an object of my invention to improve upon the invention in said application so that the same crystal mounting and associated parts may be used for a plurality of crystals having different temperature coefficients or different thickness.

I have illustrated the invention in the drawing in which:

Fig. 1 is a sectional elevation of a crystal control device embodying invention, the section being taken on the line 1—1 of Fig. 2.

Fig. 2 is a plan view of the device shown in Fig. 1 with the exception that a part of the devices sectioned on the line 2—2 of Fig. 1.

Referring to the drawing, a metal cylinder 1 is secured to an insulating base 3 by any means such as screws 4. On the base 3 is located a metallic plate 5 and on this plate rests the quartz crystal 6. Above the crystal is a metal top plate 7 having a screw shank 8 threaded through a collar or boss 8' on the top piece of the cylinder. When the shank is threaded in and out of the boss the disc 7 can be moved toward and away from the crystal 6 any desired amount.

If the disc 7 is adjusted for a certain normal temperature of one one-thousandth of an inch or any other desired spacing and the temperature increases, the crystal's oscillating frequency will lower and this will be augmented by decrease of the space through the expansion of the crystal. To counteract this double effect the spacing between the crystal 6 and the plate 7 should increase above the spacing previously set. To automatically increase this spacing the cylinder is made of different material from the screw 8 so that the combined expansion is such as to increase the free space between the crystal and the disc 7. One may select various metals for accomplishing the purpose, the metals chosen depending upon the lengths of the metallic parts. In general, it may be said that the cylinder 1 should be made of metal that has a greater coefficient of expansion than the screw 8 so that the space between the crystals 6 and the plate 7 will increase with an increase of temperature. Various materials may be chosen for these two parts, depending upon the design and the apparatus. One may select such materials from standard lists of metals but a suitable choice may be made from the following:

Material	Coefficient per degree centigrade
Invar	0 $\times 10^{-6}$ to 13 $\times 10^{-6}$
Tungsten	4 $\times 10^{-6}$
Carbon	5 $\times 10^{-6}$
Iron	9 $\times 10^{-6}$
Zinc	26 $\times 10^{-6}$
Bronze	29.5 $\times 10^{-6}$
Hard rubber	80 $\times 10^{-6}$
Celluloid	109 $\times 10^{-6}$

Electrical connections will be made in any desired way between electric plates 5 and 7 and the other parts of the circuit. These are not shown on the drawing.

The invention so far described in detail is that of Stuart W. Seeley disclosed in the above mentioned application. In my improvement I so design the device that various crystals may be used having different temperature co-efficients or different thicknesses or other different characteristics. Instead of tapping the collars 8' to thread with the shank 8 I make the bore 9 therethrough without threads. The shank 8 snugly fits the bore and is supported by pointed opposed pairs of set screws 10, 11, arranged at

various distances from the top plate of frame 1. Only one of these pairs of set screws will have the points therefore engaged between the threads of the adjusting screws 8. The others will be threaded out of engagement with such adjusting screws.

Let us suppose that with a given crystal 6 the set screws second from the top shown in Fig. 1 will be adjusted so that the points engage the shank 8 and the length between such screws and the plate 7 is such as to cause proper compensation for temperature changes. If this crystal is removed and some other crystal inserted that has different thicknesses or temperature characteristic, the coacting screws 10, 11 of Fig. 1 would be adjusted to inactive position and some other opposed pair of screws 10, 11, would be threaded into engagement with the screws 8 so that compensation would result. By trial the proper pair of set screws may be selected to secure correct compensation.

While I have shown the particular means of changing the length of the adjusting shank 8 or equivalent part without changing the air gap between the top plate 7 and the crystal 6, it will be understood that various other modifications may be devised for accomplishing the same purpose without departing from the spirit of the invention.

Having described my invention, what I claim is:

1. In crystal controls, a crystal, a conducting plate on each side of the crystal, and means to change the spacing between said plates in response to temperature changes to maintain the oscillations of the crystal constant as its temperature changes, and means to manually adjust the first mentioned means without substantially varying said spacing.

2. In crystal controls, a crystal, a plate adjacent to one side of said crystal, a second plate adjacent to the other side of the crystal, a link supporting one plate and extending past the other plate, a second link connected to the first link and extending toward the second plate, said links having different coefficients of expansion and being of such length as to maintain the frequency characteristic of the crystal constant as the temperature changes, and means to manually alter the length of said links without substantially changing the relative distance between said plates.

THEODORE J. SCOFIELD.