Oct. 4, 1955 R. F. MONTGOMERY ET AL 2,719,361

CALIPERING METHOD AND APPARATUS

Filed Nov. 5, 1952 5 Sheets-Sheet 1

Fig. 1.

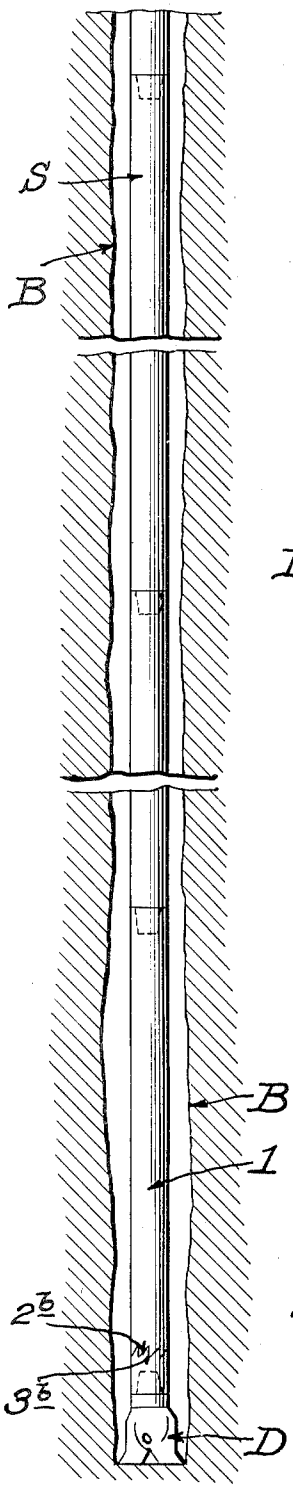

Fig. 2.

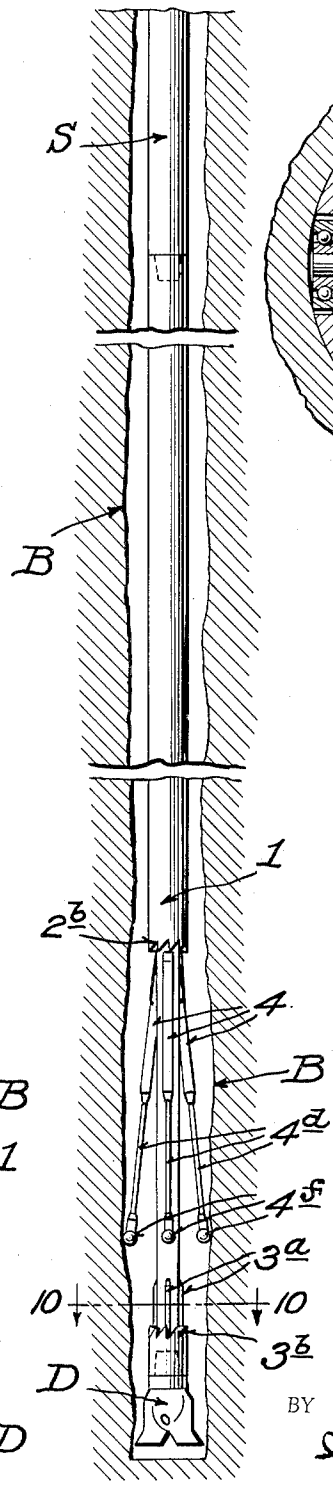

Fig. 9.

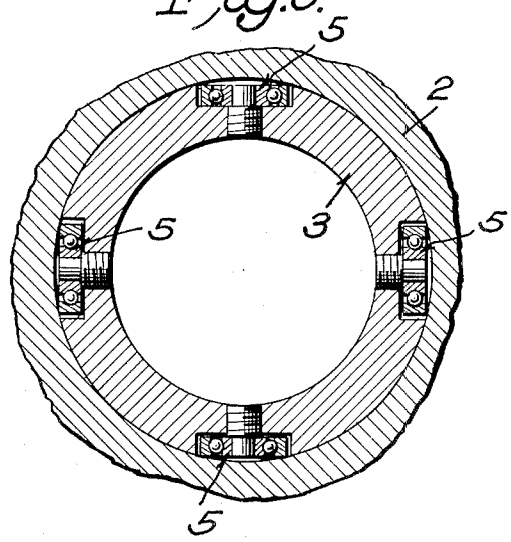

Fig. 10.

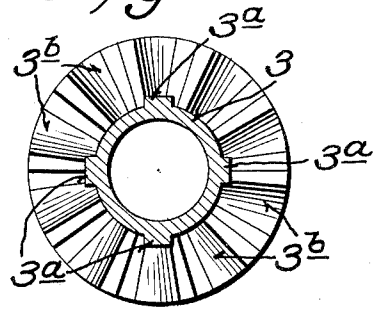

INVENTOR
Richard F. Montgomery
and
Nicolaas L. H. Koot

BY
Alexander Powell, ATTORNEYS

Oct. 4, 1955 R. F. MONTGOMERY ET AL 2,719,361

CALIPERING METHOD AND APPARATUS

Filed Nov. 5, 1952 5 Sheets-Sheet 2

Fig. 3.

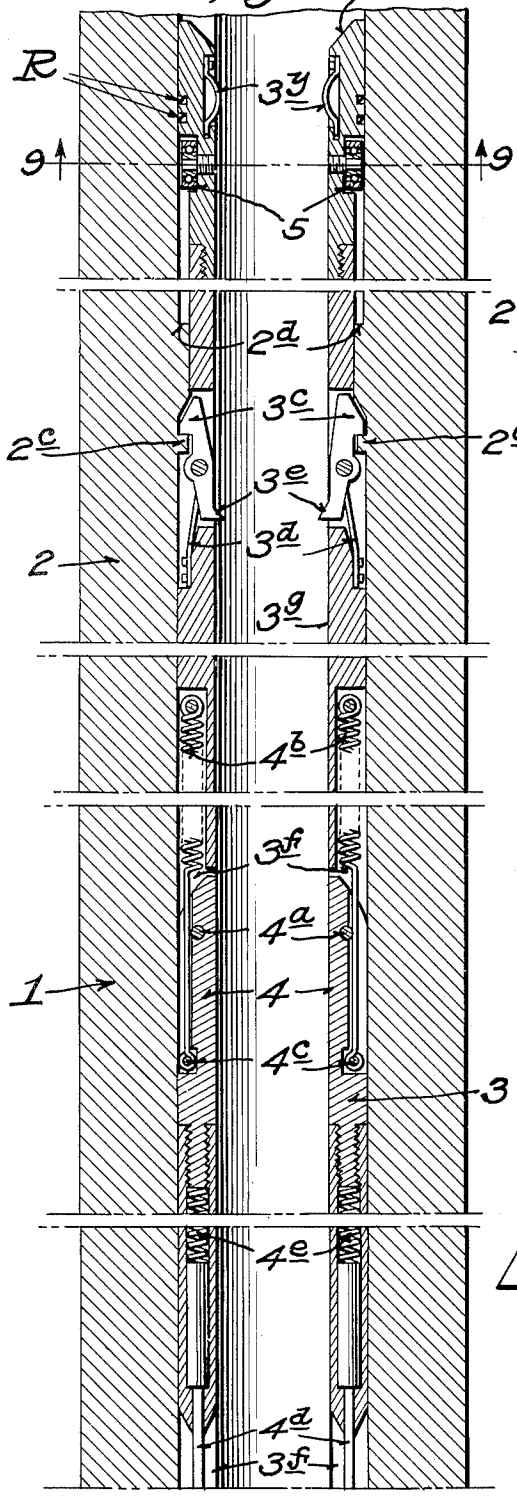

Fig. 3a

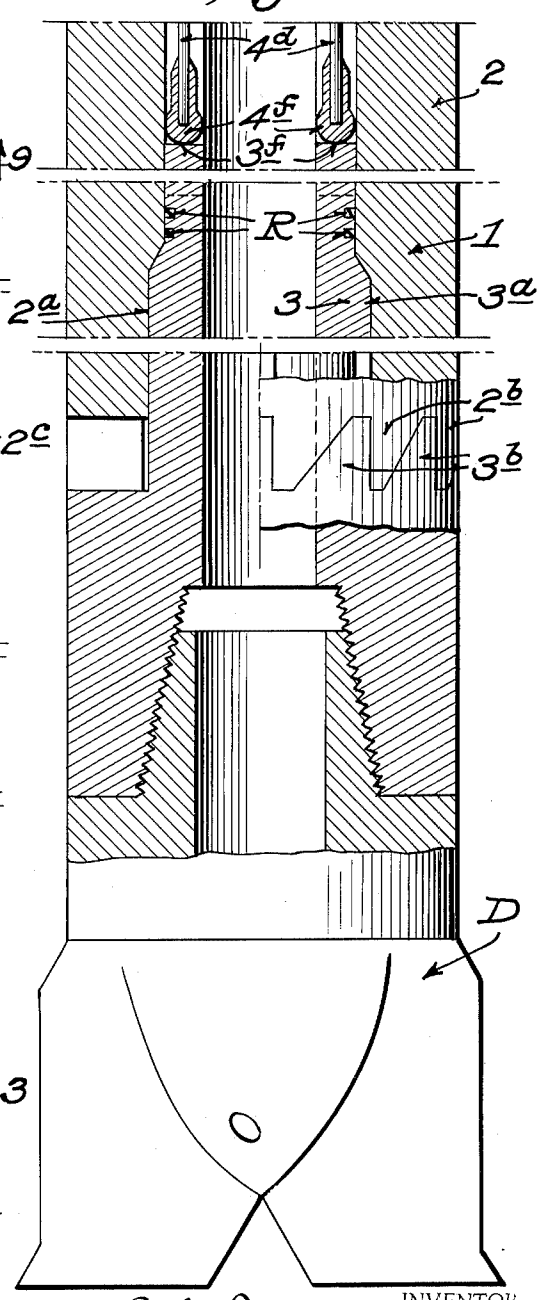

INVENTOR
Richard F. Montgomery
and
Nicolaas L. H. Koot
BY
Alexander Powell,
ATTORNEYS

Oct. 4, 1955 R. F. MONTGOMERY ET AL 2,719,361

CALIPERING METHOD AND APPARATUS

Filed Nov. 5, 1952 5 Sheets-Sheet 3

Fig. 4.

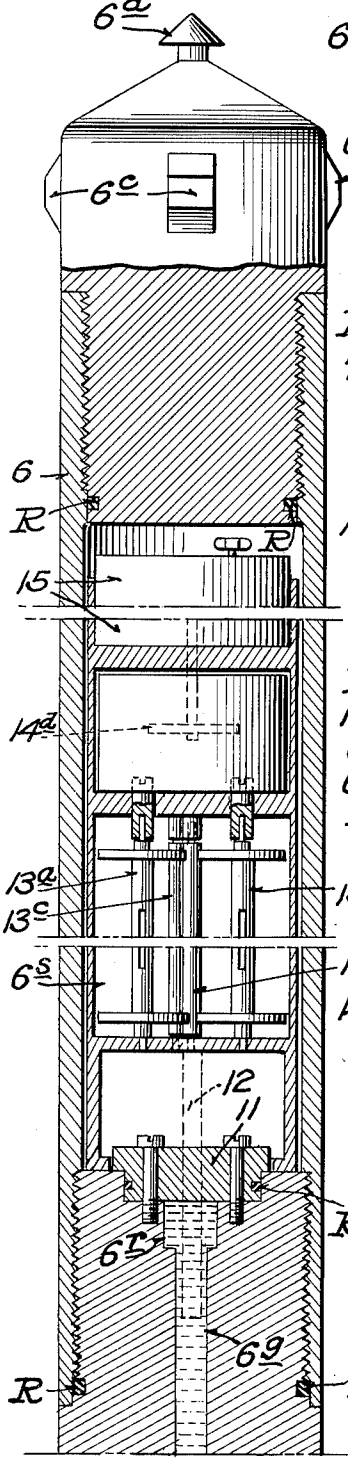

Fig. 4a.

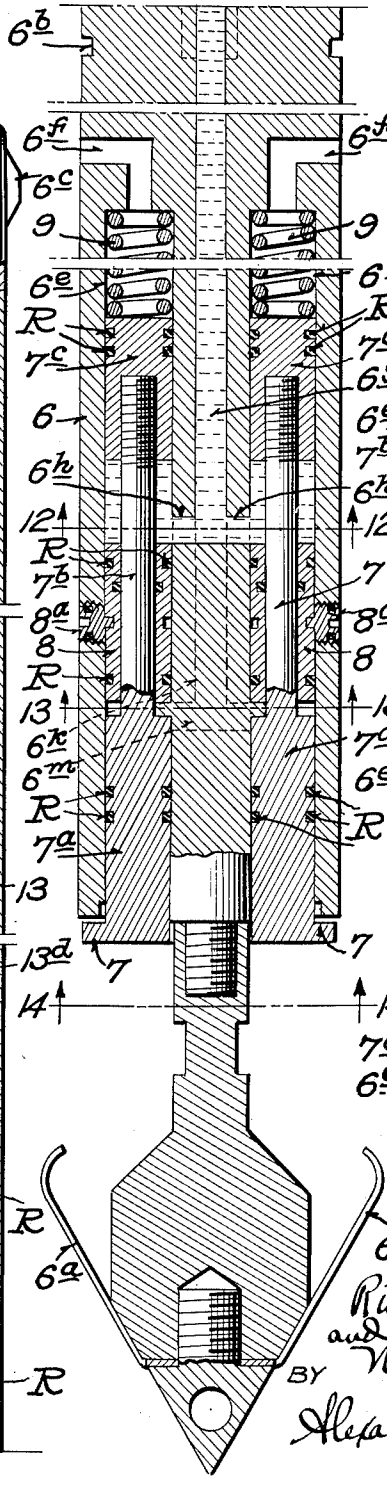

Fig. 11.

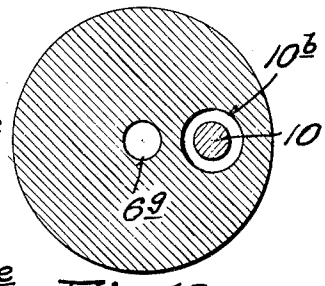

Fig. 12.

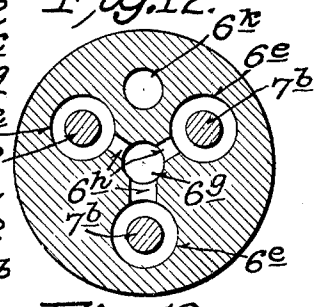

Fig. 13.

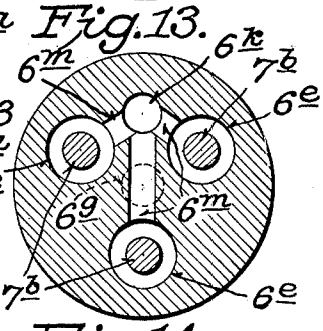

Fig. 14.

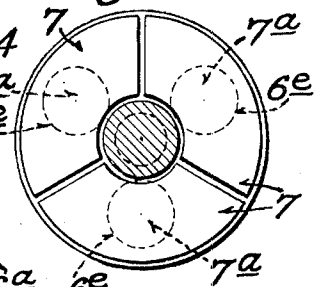

INVENTOR
Richard F. Montgomery
and
Nicolaas L. H. Kool
BY
Alexander Ewell,
ATTORNEYS

Oct. 4, 1955 R. F. MONTGOMERY ET AL 2,719,361

CALIPERING METHOD AND APPARATUS

Filed Nov. 5, 1952 5 Sheets-Sheet 4

Fig. 5.

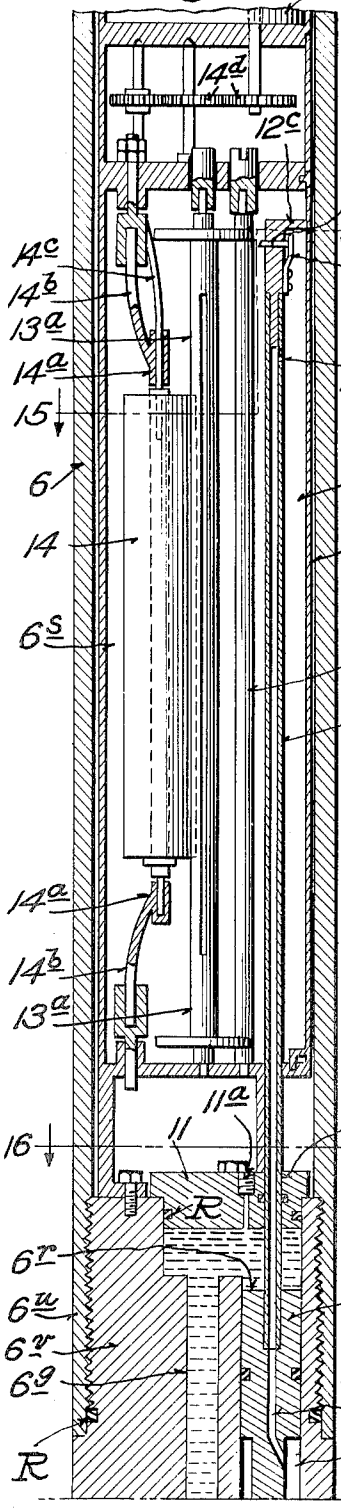

Fig. 5a

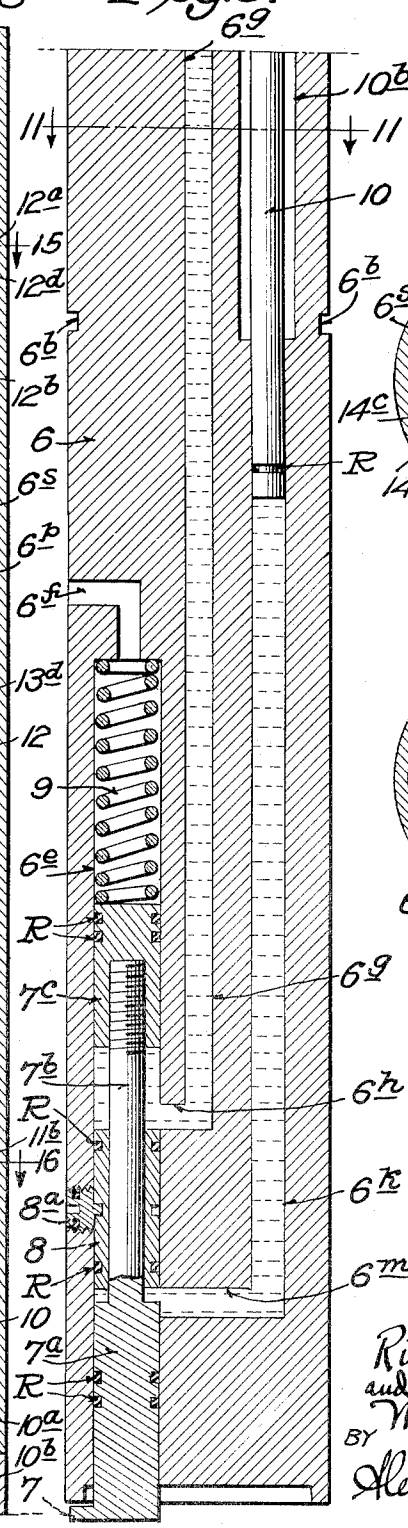

Fig. 15.

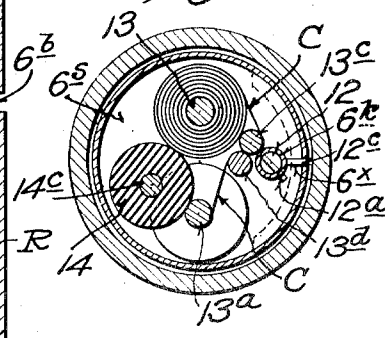

Fig. 16.

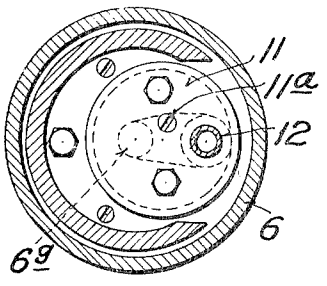

INVENTOR
Richard F. Montgomery
and
Nicolaas L. H. Koot
BY
Alexander & Dowell,
ATTORNEYS

Oct. 4, 1955 R. F. MONTGOMERY ET AL 2,719,361

CALIPERING METHOD AND APPARATUS

Filed Nov. 5, 1952 5 Sheets-Sheet 5

Fig. 6.

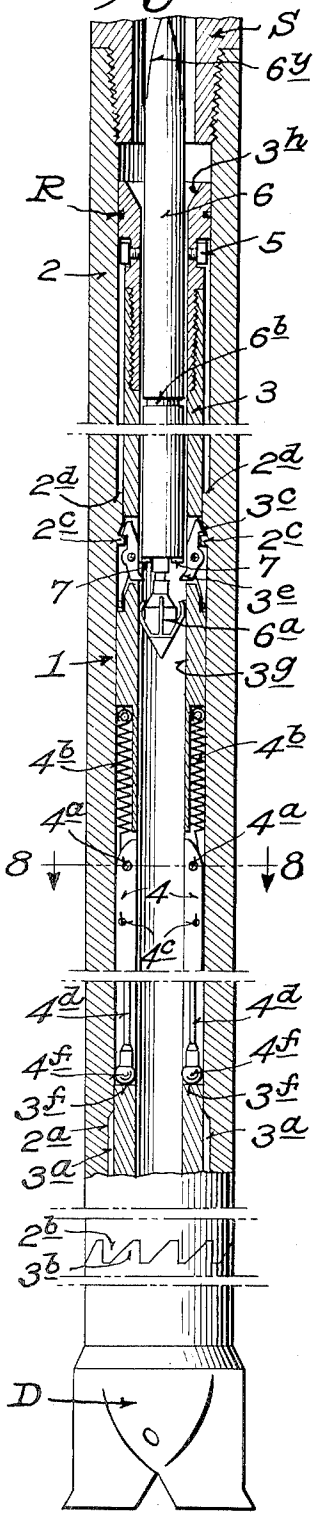

Fig. 7.

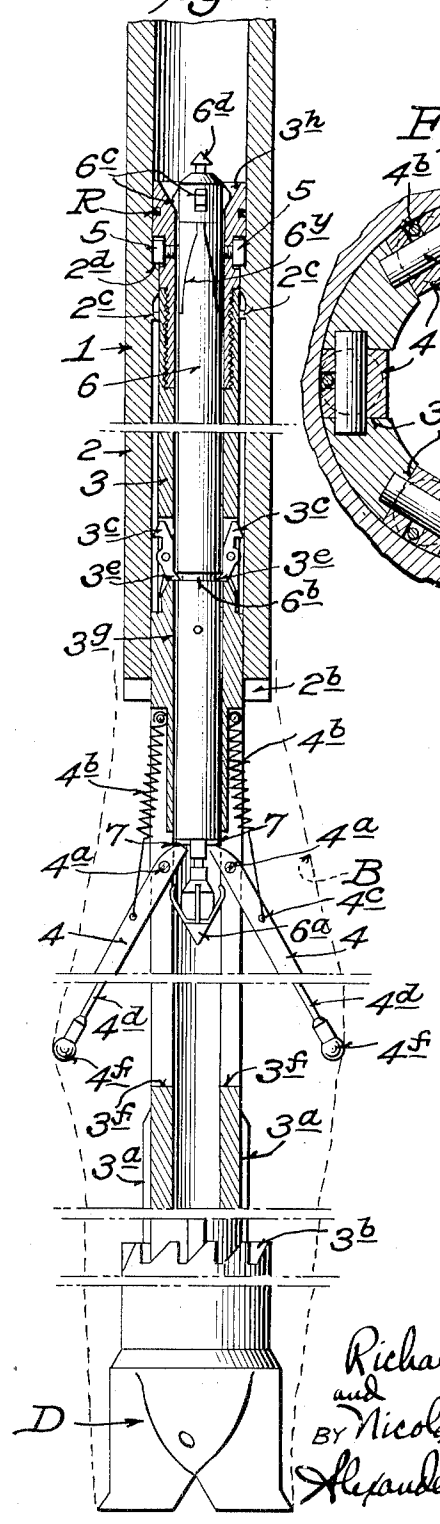

Fig. 8.

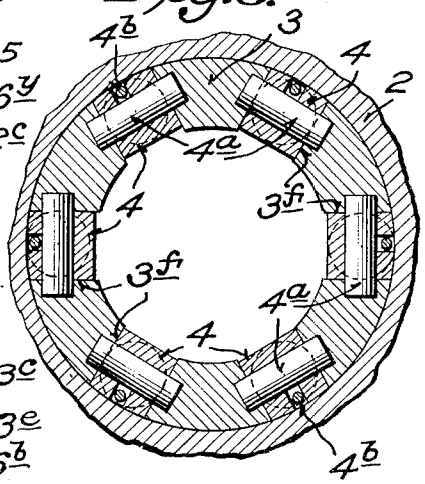

INVENTOR
Richard F. Montgomery
and
BY Nicolaas L. H. Koot
Alexander Sprowl
ATTORNEYS

United States Patent Office 2,719,361
Patented Oct. 4, 1955

2,719,361

CALIPERING METHOD AND APPARATUS

Richard Franklin Montgomery, Snyder, and Nicolaas Leonardus Huibertus Koot, Odessa, Tex.

Application November 5, 1952, Serial No. 318,826

23 Claims. (Cl. 33—178)

Our invention relates to the art of calipering a well bore, and more specifically provides a novel method of running the caliper and novel apparatus for carrying out said method.

The principal object of our invention is to provide a novel and greatly improved method of running a caliper within a drilled bore. It is well known that the removal of a drill string from a bore several miles deep is a time-consuming operation which in itself contributes relatively little information to the operators. In all known methods now used, when the bore is completed it is necessary to pull all of the drill string out of the bore and then to run a caliper down into the bore on a wire line, the log generally being recorded on the surface by the aid of electronics. According to the present invention, however, a special section of pipe, hereinafter referred to as the "substitute," is inserted between the drill bit and the lowermost drill collar prior to the beginning of the drilling operation. When this operation has been completed and the desired depth of bore established, the operator then opens the Kelly joint and inserts our novel recording tool into the pipe string and pumps the recording tool downwardly in the string until it reaches and enters the substitute. The arrival of the recording tool in the bore of the substitute triggers a latch metchanism thereby releasing a plurality of caliper arms to pivot outwardly and engage the walls of the bore, the recording tool automatically being oriented with said arms and latched in proper engagement therewith. When the recording tool is thus operatively engaged with the caliper arms, the tool will record a running log of the size of the bore as the substitute and drill string assembly is moved upwardly within the bore during removal of the drill string therefrom. When the assembly has thus been withdrawn, the recording tool is recovered from within the substitute and the operator removes the chart whereon is graphically inscribed the running log of the diameter of the bore.

An important feature of novelty of our invention relates to the above mentioned pumping of the recording tool downwardly through the drill string whereby said tool travels in a smooth bore all the way down to the substitute. This feature eliminates the possibility of the tool sticking or getting lodged or hung up as it travels downwardly. The tools of the prior art when lowered on a wire line into the bore have a tendency to encounter irregularities within the bore and bridge thereacross, particularly when the bore drilled into the earth is not straight.

Another important object of our invention is to provide an engagement between the substitute and the recording tool having an annular clearance to establish fluid passage ways so that when the recording tool is latched within the substitute fluid circulation may be maintained through the pipe string to enable the operator to maintain control of the bore against blowouts.

Another important object of our invention is to provide a substitute having two telescoping barrel sections,

the inner section normally being retracted within the outer section, and the sections being provided with splines or intermeshing tooth-engagements so as to prevent relative rotation therebetween during the drilling of the bore. When the recording tool is pumped downwardly into the substitute, the inner barrel section is released to telescope outwardly of the outer barrel section, the caliper arms being recessed in slots within the inner barrel section when the two sections are telescoped together, but pivoting outwardly of the inner barrel section as the latter telescopes downwardly with respect to the outer barrel section. When the two barrel sections are in their elongated position, the engagement therebetween is changed from a non-rotatable spline engagement to a ball-bearing engagement so as to permit the outer and inner barrel sections to freely rotate with respect to each other. The advantage of this change of engagement from non-rotatable to rotatable is that when the two barrel sections are in their mutually elongated position and the caliper arms are engaging the walls of the bore, the pipe string may be rotated by the operator for the purpose of disconnecting the stands of pipe as they are withdrawn from the bore, thereby allowing the caliper arms to stand motionless against the well bore while the pipe string is being rotated to disconnect a stand.

Another important object of our invention is to provide each arm with telescoping lengths whereby the arms will not be damaged in the event the pipe string should be lowered through a short distance as the pipe joints are unscrewed at the surface during removal of the successive stands of pipe.

Another primary object of our invention is to provide an hydraulic recording tool adapted to be latched within the elongated substitute and having a plurality of cam surfaces each of which engages one or more of the caliper arms, said cam surfaces being moved by said arms in accordance with the variation of the pivotal position of the arms as they travel upwardly within the bore constantly contacting the varying inside diameter thereof. Each of these cams is operatively connected to a measuring piston acting upon a confined liquid within the recording tool. The total volume of space occupied by the confined liquid is always constant and the respective measuring pistons, as they are moved by the associated cams, cause the distribution of the fluid on each side of a separate recording piston to fluctuate, thereby driving the recording piston upwardly or downwardly within the recording tool in accordance with the instantaneous summation of the positions of all of the measuring pistons. The recording piston is linked to a recording stylus, which stylus presses against a moving chart and records thereon the average diameter of the well bore in accordance with the summation of the readings supplied by all of the aforementioned caliper arms, the moving chart being driven by a clock mechanism contained within the recording tool.

The advantage of this assembly is that the log of the diameter of the well bore may be accurately obtained because of the fact that the various caliper arms work independently of each other and because of the fact that the hydraulic recording system provides a reading which is proportional to the summation of the instantaneous positions of all of the arms. Thus, if the well bore is crooked and the caliper is lying against one side of the bore so that the caliper arms are fully retracted on that side, the arms opposite the side of the caliper contacting the well bore will be further expanded to compensate for the fact that the caliper is not centered within the bore at that particular moment.

Another important advantage of the present invention is that static-electric charges within the bore will not affect the readings of the recording tool, since the latter oper-

ates by mechanical and hydraulic means rather then by electrical recording means.

Other objects and advantages of our invention will become apparent during the discussion of the drawings, wherein:

Fig. 1 is a section through a well bore, showing a drill string including the aforementioned substitute interposed in the drill string adjacent the drill bit, the substitute being in telescopic retracted position.

Fig. 2 is a section through the well bore, showing the drill string pulled upwardly through a distance sufficient to permit the inner barrel section of the substitute to elongate downwardly with respect to the outer barrel section and showing the caliper arms extended outwardly and engaging the walls of the bore.

Figs. 3 and 3*a* illustrate a longitudinal section through the substitute, showing the inner barrel section retracted and latched within the outer barrel section, and showing the drill bit operatively engaged therewith.

Figs. 4 and 4*a* illustrate a longitudinal section through the recording tool, showing the measuring cams connected with the measuring pistons, and showing the chart drums operatively engaged with the clock and drive mechanism, the latter being illustrated only schematically.

Figs. 5 and 5*a* illustrate another longitudinal section through the recording tool, showing a clear illustration of the chart drive and stylus means.

Fig. 6 is a longitudinal section through the substitute, showing the respective inner and outer barrel sections retracted, and showing the recording tool in a location just prior to the position in which it triggers the latch holding the inner barrel section retracted within the outer barrel section.

Fig. 7 is a longitudinal section through the substitute, showing the inner barrel section in elongated position with respect to the outer barrel section, and showing the recording tool latched within the inner barrel section and operatively associated with the extended caliper arms.

Fig. 8 is an enlarged section view taken along line **8—8**, of Fig. 6.

Fig. 9 is an enlarged section view taken along line **9—9** of Fig. 3.

Fig. 10 is an enlarged section view taken along line **10—10** of Fig. 2.

Fig. 11 is a section view along line **11—11** of Fig. 5*a*.

Fig. 12 is a section view along line **12—12** of Fig. 4*a*.

Fig. 13 is a section view along line **13—13** of Fig. 4*a*.

Fig. 14 is a section view along line **14—14** of Fig. 4*a*.

Fig. 15 is a section view along line **15—15** of Fig. 5.

Fig. 16 is a section view along line **16—16** of Fig. 5.

Referring now to the drawings, Figs. 1, 2 and 7 illustrate the drilling and calipering assembly within the bore B, Figs. 1 and 2 illustrating a drill string S having a drill bit D at the bottom thereof and having interposed within the string directly above the bit D the telescoping and rotating substitue **1**.

The substitute

By reference to Figs. 3, 3*a*, 6 and 7 it will be seen that the substitute **1** includes an outer barrel section **2** and a telescoping inner barrel section **3**. The respective barrel sections **2** and **3**, when in their mutually retracted position, engage each other non-rotatively at the splines **2***a* and **3***a*, and also engage each other at the intermeshing teeth **2***b* and **3***b*, the splines and teeth being provided so as to permit transmittal of torque from the drill string S through the substitute to the drill bits D during drilling operation. The outer and inner barrel sections are maintained in their mutually retracted position by the latches **3***c* which engage the annular shoulder **2***c*, said latches being yieldably maintained in engagement with the shoulder **2***c* by the leaf springs **3***d* and said latches having at their lower ends inward projections **3***e*, Fig. 3.

By reference to Figs. 3, 3*a*, 6 and 7 it may be seen that the inner barrel section **3** has an annular series of axially

disposed slots **3***f*, which slots normally house the caliper arms **4**, the latter being pivotally supported in the slots near their upper ends by a set of pins **4***a*, Fig. 8. Each slot also contains a spring **4***b* secured to the inner barrel section **3** at the upper end of the slot **3***f*, each of which springs is secured at its lower end to a caliper arm at a point **4***c* below the pins **4***a*. It will be noted from the drawing that when the inner barrel **3** is retracted within the outer barrel **2**, the caliper arms **4** are nested in the position shown in Fig. 6 and are protected from damage during the drilling operation by the outer barrel **2** which completely covers the arms **4**. Each arm **4** telescopically receives a retractable extension **4***d*, which extension is normally pressed outwardly by the springs **4***e*, as shown in Fig. 3, and the extensions **4***d* terminate at their outer ends in rounded feeler members **4***f*, which members engage the walls of the bore and are moved inwardly and outwardly with respect to the inner barrel **3** as the latter is drawn upwardly within the said bore during withdrawal of the pipe string.

By reference to Figs. 3, 6, 7 and 9 it will be seen that the inner barrel **3** has mounted near its upper end a series of ball bearings **5**, which ball bearings are inoperative when the outer and inner barrel members **2** and **3** are in mutually retracted position but which ball bearings engage the annular shoulder **2***d* when the outer and inner barrels **2** and **3** are in their extended positions as shown in Fig. 7, the ball bearings being more clearly shown in Fig. 9. When the inner and outer barrel members **2** and **3** are in extended position the splines **2***a*–**3***a* and the teeth **2***b*–**3***b* are disengaged so that the inner barrel **3** may freely rotate within the outer barrel **2**, the former being vertically supported by the latter through the engagement of the ball bearings **5** with the annular shoulder **2***d*, thereby permitting the inner barrel section **3** and associated arms **4** to freely rotate with respect to the outer barrel **2** and associated pipe string S.

The recording tool

When the drill string and drill bit have reached the depth required for the bore, the Kelly joint (not shown) is opened and the recording tool **6** is inserted into the drill string. The operator then starts the pump and pumps the recording tool **6** downwardly within the string S. At the instant before the recording tool **6** triggers the latch **3***c* to release the inner barrel member **3** to drop downwardly with respect to the outer barrel member **2**, the various parts of our caliper are in the position shown in Fig. 6.

At the lower end of the recording tool **6** is a centralizer **6***a* adapted to insure that the recording tool **6** will travel freely into the tubular center **3***g* of the inner barrel section **3**, it being noted that at the upper end of the tubular center **3***g* is a conically tapered entrance **3***h* adapted to direct the centralizer **6***a* into the tubular center **3***g*. As the recording tool **6** progresses downwardly within the tubular center **3***g* the lower end of the recording tool **6** contacts the internally extending projections **3***e*, thereby pushing the latter outwardly and releasing the latch **3***c* from the annular shoulder **2***c*. The inner barrel portion **3** is thereby permitted to elongate downwardly, as shown in Fig. 7, and upon further application of pumping pressure from above the recording tool **6** is forced downwardly until the annular groove **6***b* is latched by the projections **3***e*, at which time the recording tool **6** is operatively associated with the caliper arms **4**.

The upper end of the recording tool **6** is provided with outwardly extending bosses **6***c*, which bosses engage the conical entrance **3***h*, thereby preventing further downward movement of the recording tool **6**. The upper end of the recording tool **6** may also be provided with a fishing tip **6***d* to facilitate removal of the tool **6** from the pipe string, if such removal should be desired at any time before the projections **3***e* latch into the groove **6***b*.

By reference to Figs. 4, 4*a*, 5 and 5*a*, 6 and 7 will be

seen that at the lower end of the recording tool **6** are a series of downwardly extending cam surfaces **7**, these surfaces being shown in end view in Fig. 14. Above the cam surfaces **7** and integral therewith are measuring pistons **7***a*, each of the pistons **7***a* having an upwardly extending connecting rod **7***b* screwed into an upper measuring piston **7***c*, each of the connecting rods **7***b* extending through a sleeve **8** secured against longitudinal displacement by means of a set screw **8***a*. Above each measuring piston **7***c* is a compressed coil spring **9**, which spring operates to press the associated piston **7***c* downwardly within its associated cylinder **6***e*, which cylinder is vented outside of the body of the recording tool **6** as at the vent **6***f*.

By reference to Figs. 12 and 13 it will be seen that each of the cylinders **6***e* is connected together by two different sets of ducts, the space between the sleeve **8** and the upper cylinder **7***c* being connected to an axial duct **6***g* by a set of short ducts **6***h*, Fig. 12.

By reference to Fig. 13 it will be seen that the space within the cylinder **6***e* and lying between the sleeve **8** and the lower measuring piston **7***a* is connected with the longitudinal duct **6***k* by means of a plurality of short ducts **6***m*.

By reference to Figs. 5 and 5*a* it will be seen that the cylinders **6***e* and the ducts **6***g*, **6***h*, **6***k*, and **6***m* are filled with a liquid, and that this liquid presses against the lower end of a recording piston **10** in duct **6***k*, and that the liquid also presses against the upper end of the recording piston **10** as at **6***r*, Fig. 5.

It should now be apparent that when a cam **7** is moved upwardly, the volume below the associated piston **7***c* (and therefore the volume of liquid within the ducts **6***g* and **6***r*) will increase and that by the same movement the volume of liquid within the cylinder above the piston **7***a* (and therefore in the ducts **6***m* and **6***k*) will decrease so that the liquid will press against the lower end of the recording piston **10** and move it upwardly. Conversely, when the cam surface **7** is moved downwardly the liquid will press against the upper end of the recording piston **10** and drive the latter downwardly.

Figs. 12 and 13 show that all of the cylinders are connected together both in the vicinity of the ducts **6***h* and in the vicinity of the ducts **6***m*, and therefore the amount of motion transmitted to the recording piston **10** by the liquid will be proportional to the instantaneous summation of the movement up or down of all of the cams **7**.

At the upper end of this system of ducts, Fig. 5, is a plug **11** adapted to confine the liquid within the ducts and having a screw **11***a* through which the liquid may be replenished and through which air may be removed from within the ducts. The plug **11** also has a bore **11***b* through which a hollow recording shaft **12** passes, the shaft being attached at its lower end to the recording piston **10** and carrying at its upper end a recording stylus **12***a*. This shaft also has a small breather port **12***b* communicating through the center of the shaft **12** with a duct **10***a* so as to vent the chamber **10***b*, which chamber is normally free of liquid.

The chart chamber **6***s* houses the data-recording mechanism and has an access door **6***p* to permit installation or removal of the charts C from the chart rollers **13** and **13***a*. It will be noted in Fig. 15 that the chart C travels from the roller **13** around the idler rollers **13***c* and **13***d* and on to the takeup roller **13***a*, the stylus **12***a* recording the various positions at any particular instant of time by marking the chart C against the idler roller **13***c*, the stylus being at all times spring-loaded by the leaf spring **12***d*.

A groove **6***x* is provided in the door **6***p* and supports the upper end **12***c* of the shaft **12**, Fig. 15. A rubber roller **14** is supported on bearings **14***a* fixed to leaf springs **14***b* which springs force the rubber roller **14** against the chart rollers **13**—**13***a*. The rubber roller **14** is driven through a flexible cable **14***c*, which in turn is driven by a series of gears **14***d*, one of which is driven at a uniform rate by a clock mechanism **15** (shown only schematically).

The engagements between the various parts of the substitute **1** and between the various parts of the recording tool **6** are provided with annular grooves adapted to receive rubber O-rings R to prevent seepage of the various fluids through the joints with which these rings are associated.

Operation

In calipering the diameter variations of a bore B, the operator places the rotating and telescoping substitute **1** in the pipe string S directly above the drill bit D, the inner barrel portion **3** being telescoped upwardly into the outer barrel portion **2** and latched therein by the latch **3***c*, at which time the splines **2***a*—**3***a* and teeth **2***b*—**3***b* mutually intermesh to prevent relative rotation between the barrels **2** and **3**. With this assembly in the pipe string, the operator proceeds to drill the bore B into the earth, and when he has drilled the bore to its desired depth he retracts the drill string upwardly a few feet from the bottom of the bore B, opens the Kelly joint and inserts the recording tool **6** into the pipe string. He then closes the Kelly joint and starts the pumps to pump the recording tool **6** downwardly within the pipe string S so that the recording tool **6** arrives in the relative position shown in Fig. 6.

Upon continued pumping the recording tool **6** will proceed downwardly and into the tubular center **3***g* of the inner barrel section **3**, at which time the lower end of the recording tool **6** will trip the projections **3***e* and release the latches **3***c*, thereby permitting the inner barrel portion to drop downwardly with respect to the outer barrel portion **2** until the ball bearings **5** rest upon the annular shoulder **2***d*. Continued pumping will force the recording tool **6** further downwardly within the tubular center **3***g* of the lower barrel **3** so that the projections **3***e* will latch into the groove **6***b*, at which time the bosses **6***c* at the upper end of the recording tool **6** will be fitted snugly against the conical surface **3***h*, the bosses **6***c* and the projections **3***e* rigidly maintaining the recording tool **6** longitudinally positioned as shown in Fig. 7.

The upper end of the tool **6** is provided with guide grooves **6***y*, as shown in Figs. 6 and 7, which guide contacts the spring fingers **3***y*, shown in Fig. 3 only, at the upper end of the inner barrel portion **3** so that as the guide grooves **6***y* proceed downwardly with respect to the spring fingers **3***y* the recording tool body will be rotated until the cams **7** at the lower end thereof are properly aligned with the upper ends of the caliper arms **4**. It will be seen by reference to Figs. 8 and 14 that in the present form there are six caliper arms **4** but only three cams **7**, it being intended that in the present embodiment each cam **7** should accommodate the upper ends of two adjacent caliper arms **4**.

When the recording tool **6** thus seats within the inner barrel portion **3**, the operator will be informed of the fact by a rise in pressure as the tool **6** first enters the inner barrel portion **3** and by a drop in pressure as the tool **6** releases the latches **3***c* and the inner barrel **3** elongates with respect to the outer barrel **2**. The operator then commences withdrawal of the pipe string from the bore. Generally the string will be withdrawn in stands of approximately three lengths of pipe each, and as the string is withdrawn upwardly the feeler members **4***f* on the lower ends of the caliper arms **4** will be moved inwardly and outwardly according to the various diameters of bore B encountered. The inward and outward pivoting of the arms **4** causes axial upward or downward motion of the cams **7** and the associated pistons **7***a* and **7***c*. Axial fluctuation of the location of these pistons causes the volume of liquid within the respective ducts **6***g* and **6***k* to fluctuate in accordance with the instantaneous summation of the displacement of each of the

three groups of pistons, thereby driving the recording piston **10**, shaft **12** and stylus **12***a* upwardly and downwardly with respect to the chart C.

As stated above, the chart is moved by the chart rollers **13** and **13***a*, rotated at a constant rate by the clock mechanism **15**; and as the drill string is removed, stand by stand, the chart C will show the summation of the instantaneous deflections of the various caliper arms **4**.

Moreover, each time that the upward travel of the drill string is interrupted for the purpose of unscrewing a stand of pipe, the chart C will indicate a straight line during the interval that the stand is being unscrewed, since the caliper arms **4** will be standing still with respect to the walls of the bore at that time.

The arms **4** are provided with telescoping extensions **4***d*, Fig. 3, so that as the tool joints are unscrewed and the drill string according lowered in the bore by the length of the threads on the tool joints, the sections **4***d* may telescope within the sections **4** of the caliper arms to prevent bending or breaking thereof. As pointed out above, the pipe string S and associated outer barrel portion **2** may be rotated with respect to the inner barrel portion **3**, which inner portion is supported from above only by the ball bearings **5** on the shoulder **2***d*. Thus as the pipe string is rotated the caliper arms stand still within the bore, thereby preventing damage thereto.

By inspection of Figs. 6 and 7 it will be apparent that the outer periphery of the recording tool **6** is spaced from the tubular center **3***g* of the inner barrel portion **3**, thereby permitting circulation of the drilling mud between said two members at all times so that the operator will have sufficient control to prevent blowouts.

When the drill string has been entirely removed from the well the marked chart may be removed from the tool **6** and may be replaced by a new chart simply by unscrewing the upper casing **6***u* from the lower casing **6***v* of the recording tool **6** and by opening the door **6***p* which leads into the chart chamber, Fig. 5.

We do not limit our invention to the exact form shown in the drawings, for obviously changes may be made therein within the scope of the claims.

We claim:

1. In a drill string terminating at its lower end in a bit for drilling a bore, a caliper assembly comprising an outer barrel section supported by said string; an inner barrel section telescopically engaged with said outer barrel section and supporting said bit, said barrel sections each having a liquid passage therethrough; complementary projections carried by said respective barrel sections and meshing when the latter are in mutually retracted position, said meshed projections transmitting torque from said string to said bit during drilling operations; latch means for maintaining said barrels mutually retracted, said latch means having a tripping member extending into said liquid passage; a plurality of axially disposed annularly spaced caliper arms pivoted near their upper ends to said inner barrel and having cam engaging surfaces at their upper ends, said outer barrel sheathing said arms when said barrels are retracted; spring means yieldably urging said caliper arms outwardly with respect to said inner barrel; and a measuring and recording tool having a plurality of cams operatively associated with measurement recording means, said tool being pumped downwardly in said string when the drilling operation is concluded and tripping said latch to permit elongation of said telescoping barrels, said tool lodging in said inner barrel with said cams contacting said cam engaging surfaces on said arms, the latter being unsheathed in the elongated position of said barrels with their lower ends engaging the walls of said drilled bore, whereby upon upward withdrawal of said string and caliper assembly said arms will measure the diameter of said bore and transmit said measurements through said cams to said recording means.

2. In a device as set forth in claim 1, said measuring and recording tool having an annular groove around its periphery and having outstanding annularly spaced bosses around its upper end; said inner barrel having a conically flared mouth at the upper end of its liquid passage; centralizer means on said tool to smoothly guide the latter into said liquid passage; catch means in said liquid passage to lock in said annular groove and prevent upward withdrawal of said tool, said bosses engaging said flared mouth to arrest downward movement of said tool; and orienting means for turning the tool as it enters said liquid passage to align said cams with said arms, said tool being smaller in diameter than said liquid passage to permit liquid circulation to be maintained at all times through the drill string.

3. In a device as set forth in claim 1, said inner barrel having an annular series of axially disposed slots each housing an arm when said barrels are in retracted position, said arms each comprising two telescoping lengths; means to yieldably maintain said lengths elongated; and antifriction bearing means carried by said barrel sections and operatively engaging when the latter are in elongated position, whereby said supporting string and associated outer barrel can be freely rotated with respect to said inner barrel and associated arms engaging the bore, said telescoping lengths permitting the drill string to be lowered in the bore through short distances during withdrawal therefrom without damage to said arms.

4. In a device as set forth in claim 1, said measuring and recording tool comprising, a body having a plurality of cylindrical bores extending thereinto, one of said cams being located at the opening of each cylindrical bore; a measuring piston in each cylindrical bore connected for unitary axial motion with each associated cam, each measuring piston dividing each cylindrical bore into upper and lower portions and the upper portions and the lower portions being respectively interconnected by upper and lower ducts; means for yieldably urging said measuring pistons outwardly in said cylindrical bores; a recording piston movably mounted in a recording cylinder, said upper ducts communicating with the upper end of said recording cylinder and said lower ducts communicating with the lower end of said recording cylinder; hydraulic liquid in said cylinders, ducts and cylindrical bores; a chart; means for mounting and driving the chart; and a recording stylus engaging said chart and linked to said recording piston, whereby as said cams and measuring pistons are moved axially of said cylindrical bores by the associated caliper arms the hydraulic liquid in said upper and lower ducts will be fluctuated to move the recording piston and associated stylus in proportion to the instantaneous average displacement of the said measuring pistons.

5. In a drill string terminating at its lower end in a bit for drilling a bore, a caliper assembly comprising inner and outer telescopically engaged barrels inserted in said string above said bit; said barrels each having a liquid passage therethrough; complementary projections carried by said respective barrels and meshing when the latter are in mutually retracted position to transmit torque from said string to said bit during drilling operations; releasable latch means for maintaining said barrels mutually retracted said latch means having a tripping member extending into said liquid passage; a plurality of caliper arms fixed to and retractable within said inner barrel and having tool engaging portions extending into the liquid passage when the arms are extended outwardly; spring means yieldably urging said caliper arms outwardly to engage said bore; and a recording tool to be lowered into said string when the drilling operation is concluded and trip said latch to permit elongation of said telescoping barrels, said tool lodging in said inner barrel and contacting said tool engaging portions of said arms, whereby upon upward withdrawal of said string and caliper assembly said arms will measure the diameter of said bore and transmit said measurements to said recording tool.

6. In a device as set forth in claim 5, said recording tool having an annular groove around its periphery and having an annular series of spaced bosses around its upper end; said inner barrel having a conically flared mouth at the upper end of its liquid passage; centralizer means on said tool to smoothly guide the latter into said liquid passage; catch means in said liquid passage to lock in said annular groove and prevent upward withdrawal of said tool, said bosses engaging said flared mouth to arrest downward movement of said tool, the latter being smaller in diameter than said liquid passage to permit liquid circulation to be maintained at all times through the drill string.

7. In a device as set forth in claim 5, said inner barrel having an annular series of axially disposed slots each housing an arm when said barrels are in retracted position, said arms each comprising two telescoping lengths; means to yieldably maintain said lengths elongated; and antifriction bearing means carried by said barrel sections and operatively engaging when the latter are in elongated position, whereby said supporting string and associated outer barrel can be freely rotated with respect to said inner barrel and associated arms engaging the bore, said telescoping lengths permitting the drill string to be lowered in the bore through short distances during withdrawal therefrom without damage to said arms.

8. In a device as set forth in claim 5, said recording tool comprising, a body having a plurality of cylindrical bores extending thereinto; an outwardly facing cam located at the opening of each cylindrical bore, said cams operatively engaging said caliper arms; a measuring piston in each cylindrical bore connected for unitary axial motion with each associated cam, each measuring piston dividing each cylindrical bore into upper and lower portions and the upper portions and the lower portions being respectively interconnected by upper and lower ducts; means for yieldably urging said measuring pistons outwardly in said cylindrical bores; a recording piston movably mounted in a recording cylinder, said upper ducts communicating with the upper end of said recording cylinder and said lower ducts communicating with the lower end of said recording cylinder; hydraulic liquid in said cylinders, ducts and cylindrical bores; a chart; means for mounting and driving the chart; and a recording stylus engaging said chart and linked to said recording piston, whereby as said cams and measuring pistons are moved axially of said cylindrical bores by the associated caliper arms the hydraulic liquid in said upper and lower ducts will be fluctuated to move the recording piston and associated stylus in proportion to the instantaneous average displacement of the said measuring pistons.

9. In a device as set forth in claim 8, spring finger means in the liquid passage of said inner barrel to engage a curved recess in the side of the tool; said engagement turning the tool as it enters said liquid passage to align said cams with said arms.

10. In a drill string terminating at its lower end in a bit for drilling a bore, a caliper assembly comprising an outer barrel section supported by said string; an inner barrel section telescopically engaged with said outer barrel section and supporting said bit, said barrel sections each having a liquid passage therethrough and said inner barrel section having an annular series of spaced slots longitudinally disposed around its periphery; complementary projections carried by said respective barrel sections and meshing when the latter are in mutually retracted position, said meshed projections transmitting torque from said string to said bit during drilling operations; latch means for maintaining said barrels mutually retracted; said latch means having a trip member extending into said liquid passage; a caliper arm pivoted near its upper end in each slot, said arms being retractable within said slots and said outer barrel sheathing said arms when said barrels are retracted; spring means yieldably urging said caliper arms to pivot outwardly of said slots to contact the bore, said arms each having a tool engaging portion extending into the liquid passage when the arm is pivoted outwardly; and a recording tool to be lowered into said string when the drilling operation is concluded and trip said latch to permit elongation of said telescoping barrels, said tool lodging in said inner barrel and contacting said tool engaging portions of said arms, whereby upon upward withdrawal of said string and caliper assembly said arms will measure the diameter of said bore and transmit said measurements to said recording tool.

11. In a device as set forth in claim 10, said recording tool having an annular groove around its periphery and having an annular series of spaced bosses around its upper end; said inner barrel having a conically flared mouth at the upper end of its liquid passage; centralizer means on said tool to smoothly guide the latter into said liquid passage; catch means in said liquid passage to lock in said annular groove and prevent upward withdrawal of said tool, said bosses engaging said flared mouth to arrest downward movement of said tool.

12. In a device as set forth in claim 10, said arms each comprising two telescoping lengths; and means to yieldably maintain said lengths in an elongated condition, said telescoping lengths permitting the drill string to be lowered in the bore through short distances during withdrawal therefrom without damage to said arms.

13. In a device as set forth in claim 10, said tool being smaller in diameter than the liquid passage through the inner barrel to permit liquid circulation to be maintained at all times through the drill string.

14. In a device as set forth in claim 10, antifriction bearing means carried by said barrel sections and operatively engaging when the latter are in elongated position whereby said supporting string and associated outer barrel can be freely rotated with respect to said inner barrel and associated arms engaging the bore.

15. In a device as set forth in claim 10, said recording tool comprising, a body having a plurality of cylindrical bores extending thereinto; an outwardly facing cam located at the opening of each cylindrical bore; said cams operatively engaging said caliper arms; a measuring piston in each cylindrical bore connected for unitary axial motion with each associated cam, each measuring piston dividing each cylindrical bore into upper and lower portions and the upper portions and the lower portions being respectively interconnected by upper and lower ducts; means for yieldably urging said measuring pistons outwardly in said cylindrical bores; a recording piston movably mounted in a recording cylinder, said upper ducts communicating with the upper end of said recording cylinder and said lower ducts communicating with the lower end of said recording cylinder; hydraulic liquid in said cylinders, ducts and cylindrical bores; a chart; means for mounting and driving the chart; and a recording stylus engaging said chart and linked to said recording piston, whereby as said cams and measuring pistons are moved axially of said cylindrical bores by the associated caliper arms the hydraulic liquid in said upper and lower ducts will be fluctuated to move the recording piston and associated stylus in proportion to the instantaneous average displacement of the said measuring pistons.

16. In a device as set forth in claim 15, spring finger means in the liquid passage of said inner barrel to engage a curved recess in the side of the tool, said engagement turning the tool as it enters said liquid passage to align said cams with said arms.

17. As an article of manufacture, a telescoping and rotating caliper assembly comprising, an outer barrel section; an inner barrel section telescopically engaged with said outer barrel section, said barrel sections each having a passage therethrough; and said inner barrel section having an annular series of spaced slots longi-

tudinally disposed around its periphery; complementary projections carried by said respective barrel sections and meshing when said barrels are in mutually retracted position; latch means for maintaining said barrels mutually retracted; a caliper arm pivoted at its inner end in each slot, said arms being retractable within said slots and said outer barrel sheathing said arms when said barrels are retracted; spring means yieldably urging said caliper arms to pivot outwardly with respect to said slots; and antifriction bearing means carried by said barrel sections and operatively engaging when the latter are in elongated position, whereby said barrel sections may be freely rotated with respect to each other.

18. As an article of manufacture, a measuring and recording tool comprising, a body; a plurality of double acting measuring pistons, each movably housed in a cylinder in said body and connected for unitary axial motion with an externally located cam, said measuring pistons dividing each cylinder into upper and lower portions and being respectively interconnected by upper and lower ducts; a recording piston movably mounted in a recording cylinder, said upper ducts communicating with the upper end of said recording cylinder and said lower ducts communicating with the lower end of said recording cylinder; hydraulic liquid in said cylinders and ducts; means for mounting and driving a chart; and a recording stylus engaging said chart and linked to said recording piston, whereby as said cams are moved axially of said body the hydraulic liquid in said upper and lower ducts will be fluctuated to move the recording piston and associated stylus in proportion to the instantaneous average displacement of the said cams.

19. In a drill string, the combination of a caliper assembly comprising a barrel section, caliper arms pivoted to said barrel section in an annular series, each arm having a cam engaging portion extending into said barrel section, means for yieldably urging said arms to pivot outwardly, and releasable sheathing means to protect said arms during drilling operations; and a measuring and recording tool comprising a body, a plurality of cams movably carried by said body and contacting said cam engaging portions of said caliper arms, hydraulic piston means connected with said cams for averaging the instantaneous displacements thereof, a stylus linked with said hydraulic means to be moved thereby in proportion to said averaged displacement, and means for mounting and driving a recording chart in contact with said stylus.

20. The method of calipering a well bore at the conclusion of a drilling operation and during withdrawal of the drill string from the bore, including the steps of inserting in the drill string before the drilling operation a normally retracted caliper; and after completion of the drilling operation lowering a recording tool inside the drill string into the caliper; releasing the capiler to expand and contact the well bore; and withdrawing the drill string and caliper upwardly in the well bore while recording in the tool the calipered well diameters.

21. The method of calipering a well bore at the conclusion of a drilling operation and during withdrawal of the drill string from the bore, including the steps of inserting in the drill string before the drilling operation a normally sheathed calipering apparatus; and after completion of the drilling operation releasing from inside the drill string the calipering apparatus to unsheath the latter to expand and contact the well bore; and withdrawing the drill string and associated calipering apparatus upwardly of the bore while simultaneously calipering the bore.

22. A calipering tool comprising a calipering sub adapted to be inserted in a drill string immediately above the drill bit, a plurality of normally retracted members pivotally mounted on said sub adapted to contact the well bore when extended, means urging said wall contacting means toward their extended position, recording means adapted to be lowered through the well string into seating engagement with said sub, means on said recording means adapted to release said wall contacting members when said recording means seats in said sub, and means on said wall contacting members adapted to actuate said recording means.

23. In a drill string, a caliper assembly comprising an outer tubular member, an inner tubular member telescopicaly received in said outer member, means for connecting said outer member to a well string, means for connecting said inner member to a drill bit, means for preventing relative rotation between said members when said members are mutually retracted, latch means for releasably maintaining said members in said mutually retracted relation, a plurality of caliper arms pivoted to said inner member, said arms being shielded by said outer member when said members are retracted, means urging said arms outwardly, recording means adapted to be lowered through said drill string, means on said recording means adapted to release said latch means, and means on said recording means adapted to contact said caliper arms and be actuated thereby, whereby upon withdrawal of said string and caliper assembly said arms will actuate said recording means to continuously record the well diameter.

References Cited in the file of this patent

UNITED STATES PATENTS

1,981,665	Rieber	Nov. 30, 1934
2,102,080	Kinley	Dec. 14, 1937
2,232,360	Barnett	Feb. 18, 1941
2,341,228	Moore	Feb. 8, 1944
2,348,192	Chambers	May 9, 1944
2,395,137	Millikan	Feb. 19, 1946
2,524,031	Arps	Oct. 3, 1950
2,567,548	Chaney et al.	Sept. 11, 1951

FOREIGN PATENTS

7,196	Great Britain	Mar. 27, 1903