April 2, 1957 S. BOWMAN 2,787,456

CUTTER MOUNTING FOR CONTINUOUS MINING MACHINE

Filed May 14, 1953 3 Sheets-Sheet 1

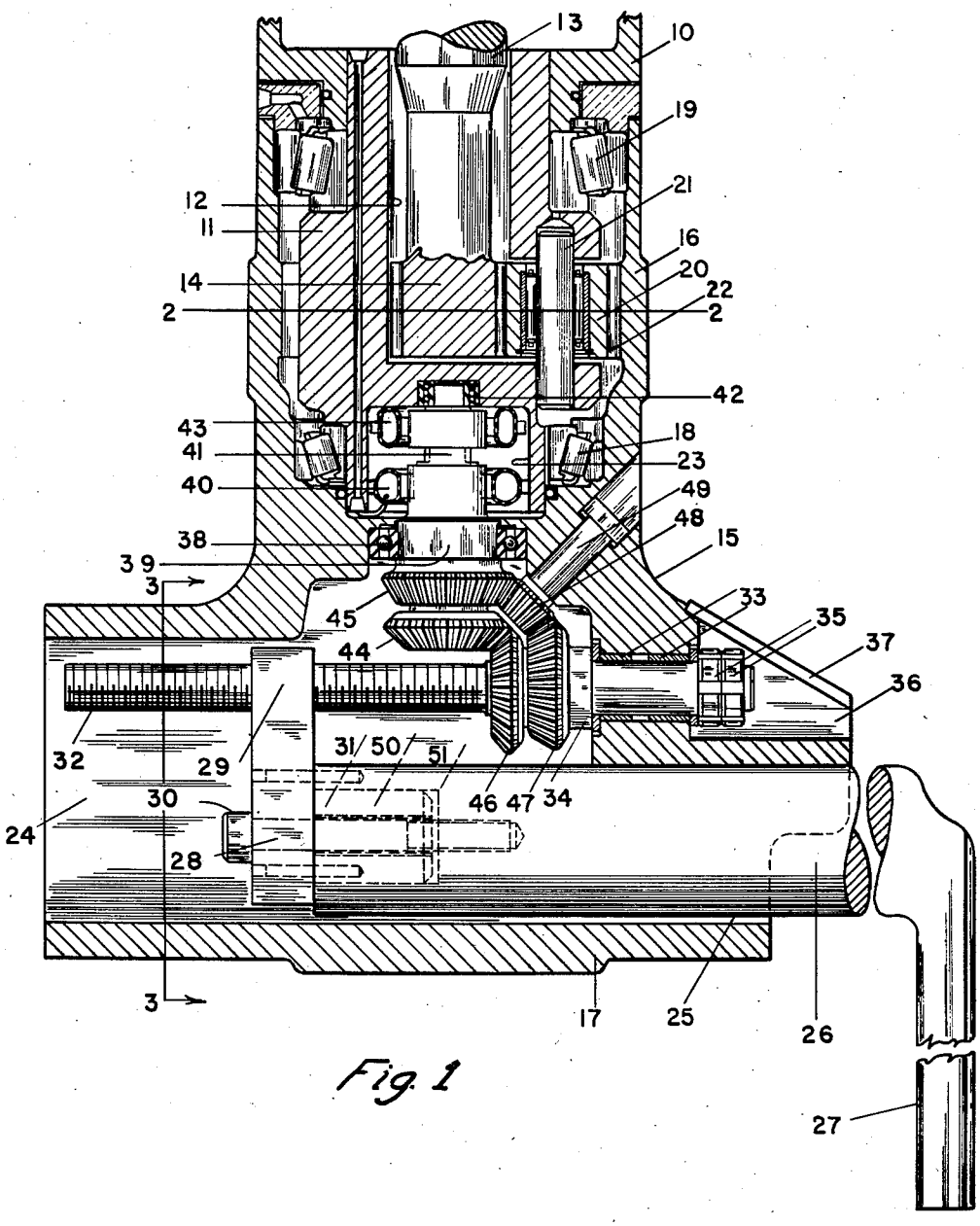

Fig. 1

INVENTOR.
SPENCER BOWMAN

BY

ATTORNEY

April 2, 1957 S. BOWMAN 2,787,456

CUTTER MOUNTING FOR CONTINUOUS MINING MACHINE

Filed May 14, 1953 3 Sheets-Sheet 2

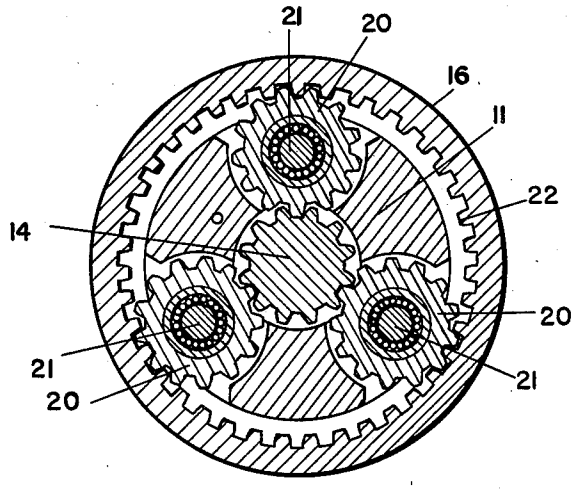

Fig. 2

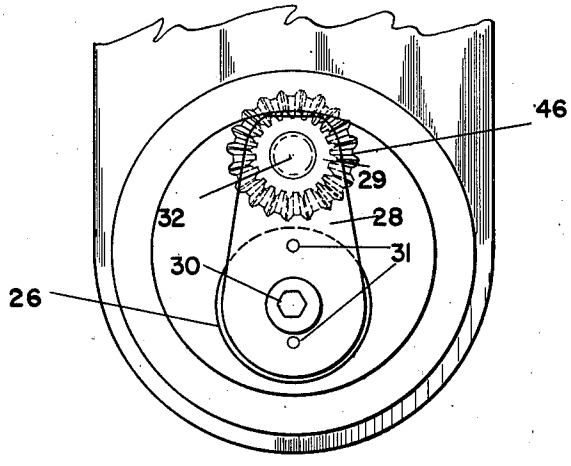

Fig. 3

INVENTOR.
SPENCER BOWMAN

BY

ATTORNEY

April 2, 1957 S. BOWMAN 2,787,456

CUTTER MOUNTING FOR CONTINUOUS MINING MACHINE

Filed May 14, 1953 3 Sheets-Sheet 3

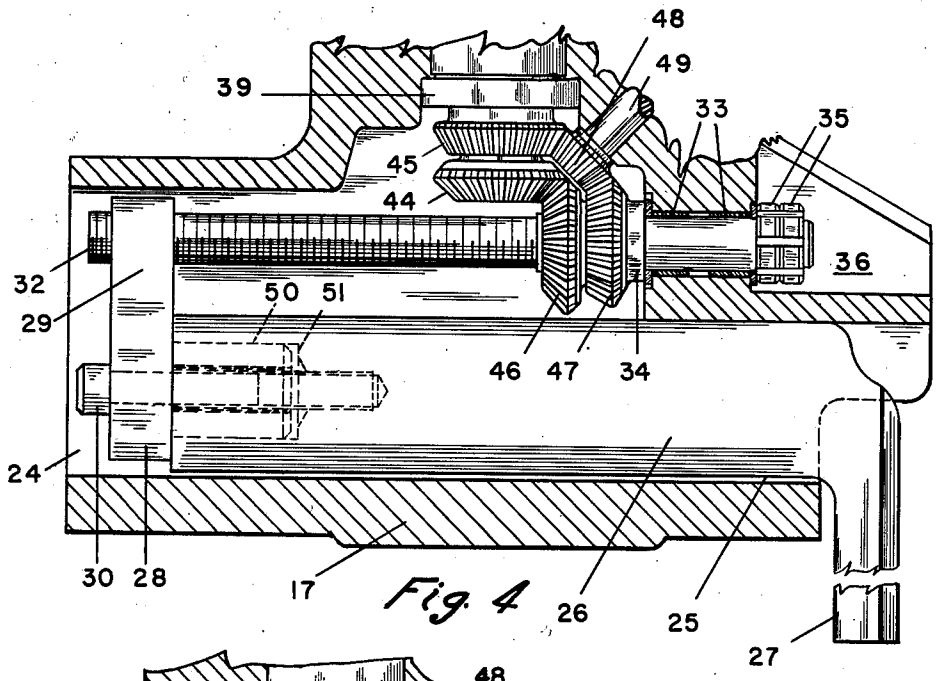

Fig. 4

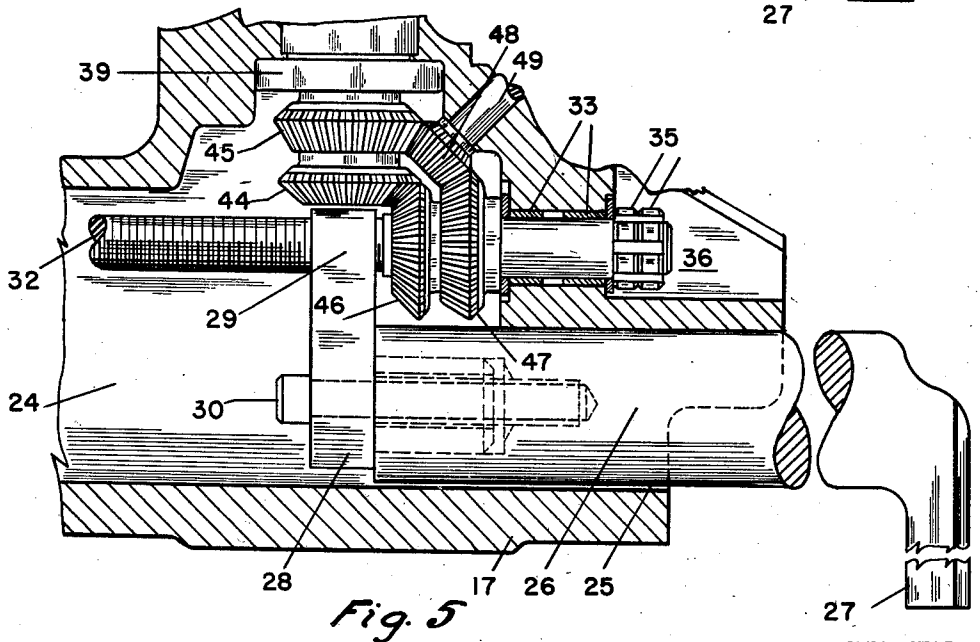

Fig. 5

INVENTOR.
SPENCER BOWMAN
BY
ATTORNEY

United States Patent Office 2,787,456 Patented Apr. 2, 1957

2,787,456

CUTTER MOUNTING FOR CONTINUOUS MINING MACHINE

Spencer Bowman, Bay Village, Ohio, assignor, by mesne assignments, to Westinghouse Air Brake Company, a corporation of Pennsylvania

Application May 14, 1953, Serial No. 355,073

9 Claims. (Cl. 262—26)

This invention relates broadly to mining machines of the continuous cutting type having one or more rotor heads carrying cutting tools which may be adjusted to cut kerfs of different diameters, but more particularly to a mechanism for changing the pitch of the cutting tools during rotation of the rotor heads in one direction.

One object of this invention is to produce such mining machines with rotor heads equipped with a simple and efficient mechanism through which each cutting tool may be extended or retracted with respect to its rotary axis during rotation of the rotor heads in one direction, thereby enabling the cutting of kerfs of various diameters without necessitating the cutter heads to be stopped or rotated in reversed directions.

Another object of this invention is to design such a cutting tool adjusting mechanism which is actuated by virtue of the rotation of the rotor head in one direction and operated by remote controls.

Still another object of this invention is to produce a cutting tool adjusting mechanism equipped with self locking means capable of holding the cutting tool in a fixed distance from its rotary axis when the mechanism is inoperative.

Another object of this invention is to produce such a cutting tool adjusting mechanism which is self-contained and sealed within the rotor head, thereby resulting in a compact assembly wherein the mechanism is well protected from the mining dust and other foreign matter while remaining properly lubricated.

Other objects and advantages more or less ancillary to the foregoing reside in the specific construction and aggroupment of the elements peculiar to this structure, as will become apparent from a more complete examination of this specification.

In the accompanying drawings:

Figure 1 is a longitudinal sectional view of a rotor head embodying the invention.

Figure 2 is a cross-sectional view taken on line 2—2 in Figure 1.

Figure 3 is a cross-sectional view taken on line 3—3 in Figure 1 and looking in the direction of the arrows.

Figures 4 and 5 show a portion of Figure 1 with the cutting tool in different positions.

Referring to the drawings, in which like symbols designate corresponding parts throughout the several views, 10 represents the outer end of a rotor head supporting arm, which arm is operatively carried by the mining machine for movement therewith. Fixed in the end of the arm 10 and extending axially therefrom, there is a stationary spider 11 formed with a central bore 12 accommodating the driving end of a shaft 13, which shaft also extends through the arm 10 to a rotation imparting mechanism carried by the mining machine. In the spider bore 12, shaft 13 is terminated by an integral sun gear 14.

A substantially T-shaped rotor head casing 15 has a tubular leg 16 forming the driving axle for its cross arm or head 17. The axle portion 16 is adequately supported

on the spider 11 for rotation relative thereto, by two tapered roller bearings 18 and 19 which are constructed and arranged in a manner calculated to also resist the end or axial thrust to which the casing 15 is subjected while in operation. Rotation in one direction from the shaft 13 is transmitted to the casing 15 through a planetary gear train which includes the sun gear 14 in mesh with three planet gears 20 mounted on cross shafts 21 carried by the stationary spider 11. The planet gears 20 are in mesh with a ring gear 22 formed as an integral part of the axle portion 16. The casing 15 is held axially on the supporting arm 10 and spider 11 by abutting engagement of annular shoulders with the races of the tapered roller bearings 18 and 19. Since the construction above referred to is more fully described in the co-pending application Serial No. 343,764, and now abandoned, and in Patent No. 2,761,664, no further description is thought necessary, other than pointing out that the stationary spider 11 has its end surrounded by a bearing 18 formed with a cylindrical cavity or bore 23.

Referring now more particularly to the invention, the cross head 16 is formed with two bores 24 and 25 extending longitudinally thereof and opening into each other. The bore 24 is a relatively large bore concentric with the cross head and opening through one end thereof, while the bore 25 is relatively smaller, offset from but parallel to the bore 24 and opening through the other end of the cross arm or head 16. Slidably guided in the bore 25 for transversal movement relative to the axis of rotation of the casing 15, there is a tool supporting member or shank 26 having a cutter bar or cutting tool 27 at right angles therewith. This tool is located outside of the casing where it extends longitudinally and forwardly thereof. In practice, this so called cutting tool can be of any desired type, such as a cutter bar carrying rotary cutters or the like, all adapted to cut a circular kerf in the coal or other material to be mined. The shank 26 extends into the bore 24 where its inner end has the tail piece 28 of a nut 29 secured thereon by a bolt 30 and dowels 31, the tail piece having a stud 50 fitting closely in a relatively short axial bore 51. The nut 29 is in operative engagement with a screw or driving element 32 extending longitudinally in the bore 24, parallel to but offset from the shank 26. This screw is adequately journaled within bearings 33 mounted in the wall of the casing 15 and is retained axially by a shoulder 34 abutting against the bottom of the bore 24, and by retaining nuts 35 located in a cutaway portion 36 closed by a removable lid 37.

Located in the casing 15 adjacent the cavity or bore 23 of the spider 11, there is a ball bearing 38 having journaled therein a tubular shaft 39. This shaft extends into the spider cavity 23 where it is operatively surrounded by a hydraulically operated brake 40 through which it may be locked to the spider 11 and thereby made stationary. Extending through and journaled within the shaft 39, there is a smaller shaft 41 which projects therefrom into the bottom end of the cavity 23 where it is adequately supported in a ball bearing 42. Small shaft 41 is also surrounded by a hydraulically operated brake 43 through which it can be locked against rotation to the spider 13.

The two shafts 39 and 41 are coaxial with the axis of rotation of the casing 15 and are therefore at right angles with the screw 32, with the shaft 41 having fixed to its outer end a first bevel gear 44 and the shaft 39 a second bevel gear 45. The first gear 44 is in mesh with a third gear 46 fixed on the screw 32. Also fixed on the screw behind the gear 46, there is a fourth gear 47 operatively connected to the second gear 45 through an idler pinion 48 carried on a shaft 49.

In the operation of the device, it will be understood that by virtue of the operative engagement of the sun gear 14, planet gears 20 and ring gear 22, rotation in one direction from the driving or output shaft 11 is imparted to the rotor head or casing 15 on its longitudinal center axis, thereby causing the cutting tool 27 to revolve about that center or rotary axis for cutting a kerf in the coal or material being mined. As the cutting operation proceeds, the whole mining machine is moved toward the face being mined, thereby gradually feeding the cutting tool deeper into the work.

As the rotor head rotates on its own axis, the bevel gears 46 and 47, normally stationary relative to their own common axis or screw 32, revolve with the screw around the center axis of the rotor head, thereby causing the gear 46 to impart rotation to the gear 44 in one direction and the gear 47 to the gear 45 in the other direction through the idler 48. In other words, when the controllable brakes 40 and 43 are released, rotation of the rotor head does not effect the rotation of the gears 46 and 47 and screw or driving element 32 on their common axis, thereby enabling the cutting tool 27 to operate or revolve about the rotary axis of the rotor head without being moved radially thereof. Because the screw threaded connection between the screw 32 and the shank 26 of the cutting tool is of the self locking type, the cutting tool 27 is actually locked radially, that is, against inward or outward movement transversely of the rotary axis of the rotor head, thereby enabling the cutting of a kerf or kerfs of uniform diameters.

When it is desired to either retract or extend the cutting tool relative to its rotary axis as shown in Figure 4 or 5, it is only necessary to operate the brake 40 or 43. Since the brakes are fixed to the stationary spider 11, it will be understood that when one or the other is actuated it holds the shaft 39 or 41, and consequently the gears 44 or 45, stationary. In such instance, the revolving motion of the third or fourth gears 46 or 47 about the rotary axis of the rotor head, or more particularly about the first or second stationary gears 44 or 45, causes the gears 46 or 47 to rotate on their own axis but in opposite directions, thereby effecting the rotation of the screw 32 in one or the other direction. By virtue of the screw threaded connection with the shank 26, which connection includes the nut 29 and its tail piece 28, rotation of the screw in one or the other direction effects inward or outward sliding motion of the shank 26 through the bore 25 to position the cutting tool 27 anywhere between the ends of its possible travel as shown in Figures 4 and 5.

In practice, the hydraulically actuated brakes 40 and 43 are controlled by an adequate valve, not shown, constructed and arranged in a manner making it impossible to energize the two brakes simultaneously. The valve is preferably of the type capable of releasing both brakes when in one position, and capable of energizing one or the other brake individually when in a second or third position.

From the foregoing description, it will be understood that by virtue of the motion translating mechanism, which includes the gears 44 to 48, screw 32 and threaded connections 29 and 28, the cutting tool 27 may be moved inwardly or outwardly upon rotation of the rotor head in one direction, for cutting kerfs of smaller or larger diameters.

The details of structure and arrangement of parts shown and described may be variously changed and modified without departing from the spirit or scope of the invention.

I claim:

1. In a mining machine, a rotor head rotating in one direction, a kerf cutting tool carried by said head for rotation therewith about its rotary axis and radially movable relative to said axis, first and second cooperating screw threaded elements within said head, the first one connected to said tool for imparting inward or outward radial movement thereto upon rotation of the second one in one or the other direction, two sets of intermeshed gears within said head connected to said second element and operable by virtue of the rotation of said head for imparting rotation to said second element in one or the other direction, the operation of each set depending upon one of its gears being held stationary.

2. In a mining machine, a head having rotary motion imparted thereto in one direction, a cutting tool carried by said head for rotation therewith about its rotary axis and radially movable relative to said axis, a duality of gear trains within said head having input ends rotating in the same and output ends rotating in different directions, said input ends each comprising a releasable stationary gear coaxial with the rotary axis of said head in mesh with another gear adapted to revolve about it by virtue of the rotary motion of said head, means for selectively releasing said center gears, and means for translating the rotation of said output ends into inward or outward radial movement of said tool relative to said axis.

3. In a mining machine, a head having rotary motion imparted thereto in one direction, a cutting tool carried by said head for rotation therewith about its rotary axis and radially movable relative to said axis, a pair of screw threaded cooperating elements within said head, one connected to said tool for imparting radial movement thereto relative to said axis upon rotation of the other element in one or the other direction, two sets of meshed gears within said head deriving rotation from the rotary motion of said head, each set having a terminal gear fixed to said other element for imparting rotation thereto, means for selectively rendering either set of gears ineffective for imparting rotation to said other element, and means within one of said sets of gears causing its terminal gear to rotate in a direction opposite to that of the other terminal gear.

4. In a mining machine, a rotor head having rotary motion imparted thereto in one direction, a kerf cutting tool carried by said head for rotation therewith about its rotary axis and radially movable relative to said axis, a screw threaded element within said head rotatable in either direction, means translating the rotation of said element in either direction into radial inward or outward movement of said tool relative to said axis, two sets of intermeshed gears within said head, each including a center gear coaxially with said rotary axis cooperating with a second gear fixed coaxially on said screw threaded element, said second gear revolving about said center gear by virtue of the rotary motion of said head, each center gear adapted to be locked selectively against rotation for effecting rotation of its second gear and of said screw threaded element on their common axis, and means within one of said gear trains causing its second gear to rotate in a direction opposite to that of the other second gear.

5. In a mining machine, a head having rotation imparted thereto in one direction, a kerf cutting tool carried by said head for rotation therewith about its rotary axis and radially movable relative to said axis, a screw threaded element carried by said head for rotation therewith on said rotary axis and on a second axis transverse thereto, means translating the rotation of said element in either direction on said second axis into radial inward or outward movement of said tool relative to said rotary axis, two sets of intermeshed gears within said head, each including a center gear coaxial with said rotary axis cooperating with a second gear fixed on said screw threaded element, said second gear revolving about said center gear by virtue of the rotation of said element on said rotary axis, each center gear adapted to be locked against rotation for effecting rotation of its second gear and element on said second axis, and means within one of said sets of gears causing its second gear to rotate in a direction opposite to that of the other second gear.

6. In a mining machine, a rotor head rotating on its own axis, a kerf cutting tool carried by said head for rotation therewith about said axis, a shank for said tool at right angles therewith radially movable relative to said axis for varying the diameter of the kerf to be cut by said tool, a screw offset from but parallel to said shank having a threaded connection therewith and adapted to rotate in either direction for imparting radial movement thereto in either direction, first and second bevel gears capable of relative rotation on said axis, third and fourth bevel gears fixed on said screw with said third one in mesh with said first one, an idler pinion between said second and fourth gears causing the latter to rotate in reversed direction relative to the third one, said screw and its fixed gears rotating with said head and said third and fourth gears revolving about said first and second ones respectively, and releasable means for holding said first or second gear stationary to impart rotation to said screw in one or the other direction by virtue of the revolving motion of its fixed gears about said first and second ones.

7. In a mining machine, a rotor head rotating in one direction, a kerf cutting tool carried by said head for rotation therewith about its rotary axis and capable of radial movement relative to said axis, two sets of intermeshed gears within said head, selectively operable clutch means adapted to connect the input end of either of said sets to said head for rotation therewith in the same direction, means within one of said sets causing its output end to rotate in a direction opposite to the output end of the other set, and screw threaded cooperating elements between said tool and said output ends to translate the rotation of one output end into outward radial movement of said tool and the rotation of the other output end into inward radial movement of said tool.

8. In a mining machine, a rotor head rotating in one direction, a kerf cutting tool carried by said head for rotation therewith and capable of radial movement relative thereto, two sets of cooperating elements within said head each having an input end rotatable in one direction and an output end rotatable in opposite directions, clutch means for selectively connecting said input ends with said head for rotation therewith in said one direction to effect rotation of said output ends, and means for translating the rotation of said output ends into radial movement of said tool.

9. In a mining machine, a rotor head rotating in one direction, a kerf cutting tool carried by said head for rotation therewith and capable of radial movement relative thereto, a first set of cooperating elements within said head having input and output ends rotatable in the same direction upon rotation of its input end with said head, a second set of cooperating elements within said head having input and output ends rotatable in opposite directions upon rotation of its input end with said head, means common to both sets of said cooperating elements for translating the rotation of said output ends into radial movement of said tool, and clutch means for selectively connecting said input ends with said head for rotation therewith.

References Cited in the file of this patent

UNITED STATES PATENTS

632,230	Berger	Sept. 5, 1899
1,335,723	Campbell	Apr. 6, 1920
1,925,709	Zimmerman	Sept. 5, 1933
1,994,879	Tweit	Mar. 19, 1935
2,730,345	Sloane	Jan. 10, 1956