United States Patent [19]

Schrempp

[11] **3,871,763**

[45] **Mar. 18, 1975**

[54] **PHOTO-CONDUCTIVE MATERIAL HANDLING DEVICE**

[75] Inventor: **Ernst Schrempp,** Norwalk, Conn.

[73] Assignee: **Pitney-Bowes, Inc.,** Stamford, Conn.

[22] Filed: **Aug. 2, 1973**

[21] Appl. No.: **384,808**

[52] **U.S. Cl.** ..... **355/16,** 226/118, 226/119, 270/61 F

[51] **Int. Cl.** **G03g 15/00**

[58] **Field of Search** ..... 355/16; 226/118, 119; 270/61 F

[56] **References Cited**

UNITED STATES PATENTS

2,865,639	12/1958	Gillette et al.	226/118 X
2,986,442	5/1961	Broding	355/16 X
3,123,269	3/1964	Morley et al.	270/61 F
3,281,042	10/1966	Hardison et al.	226/118
3,311,279	3/1967	Yeiser	226/118
3,556,374	1/1971	Demke	226/119
3,672,765	6/1972	Altmann	355/16 X

Primary Examiner—Richard M. Sheer
Attorney, Agent, or Firm—William D. Soltow, Jr.; Albert W. Scribner; Robert S. Salzman

[57] **ABSTRACT**

A method and device for handling an endless, flexible, articulated belt of photoconductive material. The belt is continuously moving, and a housing is provided to store the greater portion of the belt which is not being run through copier machiner. A pair of feed rollers feed a quanity of belt material returning from the copier machine to the housing, and a pair of dispensing rollers are synchronized with the feed rollers so as to eject a like quantity of belt material to the copier. Therefore, although the portion of the belt within the housing is continuously changing, the unit mass of material within the housing remains substantially constant. The photoconductive belt is uniquely fan-folded within the housing to provide a compact bundle of material, and the bundle is made to reciprocally translate within the housing, as the belt is fed to, and dispensed from the housing. The dispensed photoconductor generally undergoes an imaging process comprising the steps such as: (a) charging; (b) exposing; (c) developing; (d) transferring; and (e) cleaning; etc.

6 Claims, 6 Drawing Figures

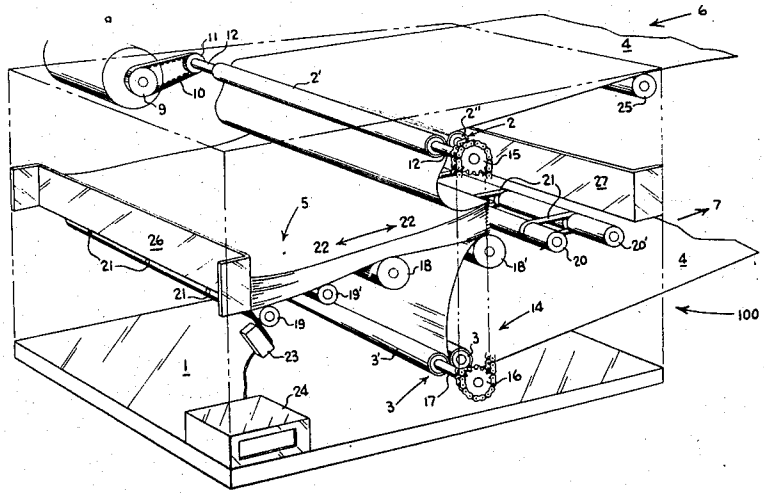

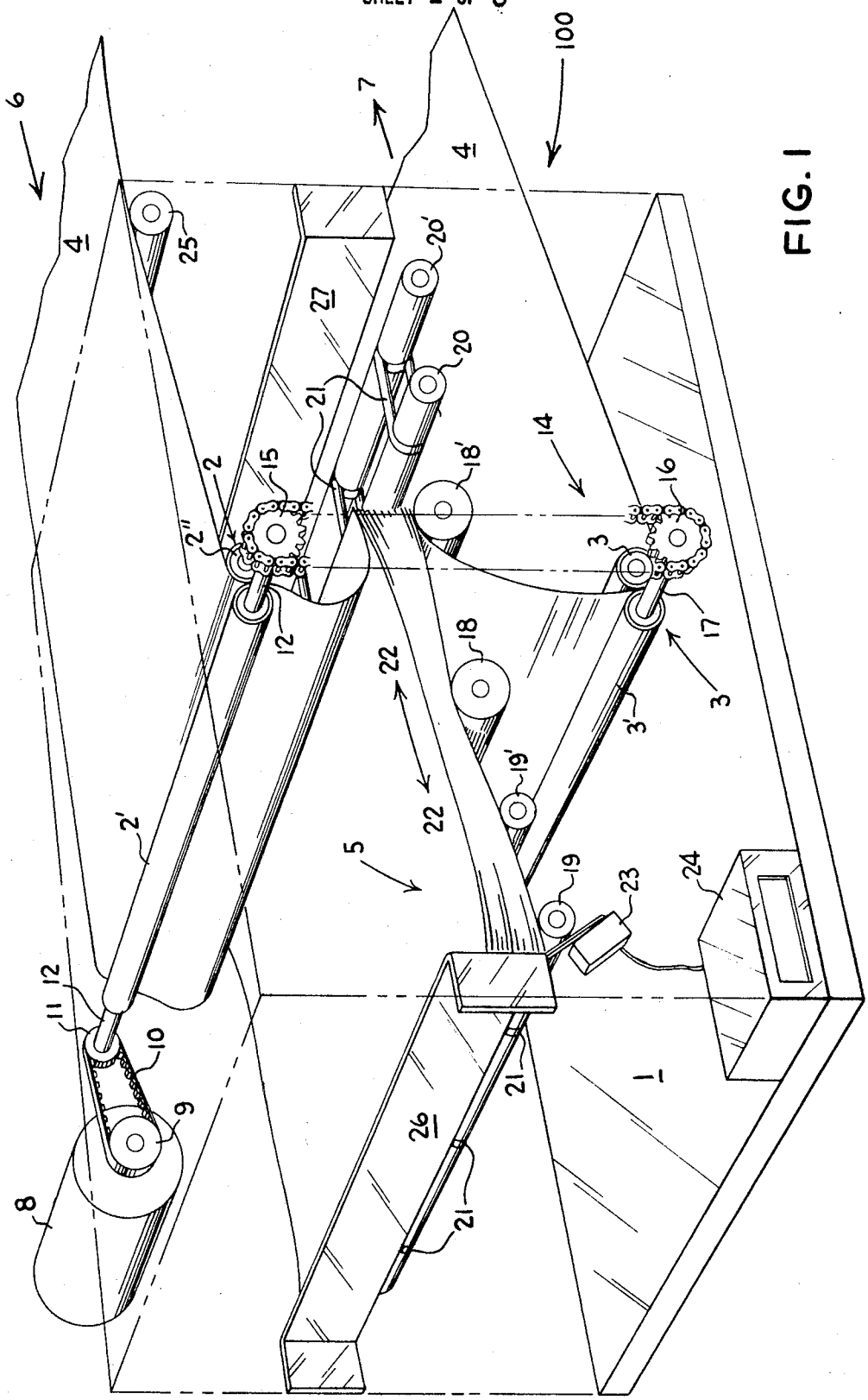
100
6
7
4
4
25
20'
27
20
21
14
2
15
18'
16
2"
3
12
17
18
22
3'
3
22
19'
2'
5
19
23
24
12
11
10
9
8
21
1
26
21

FIG. 1

FIG. 3

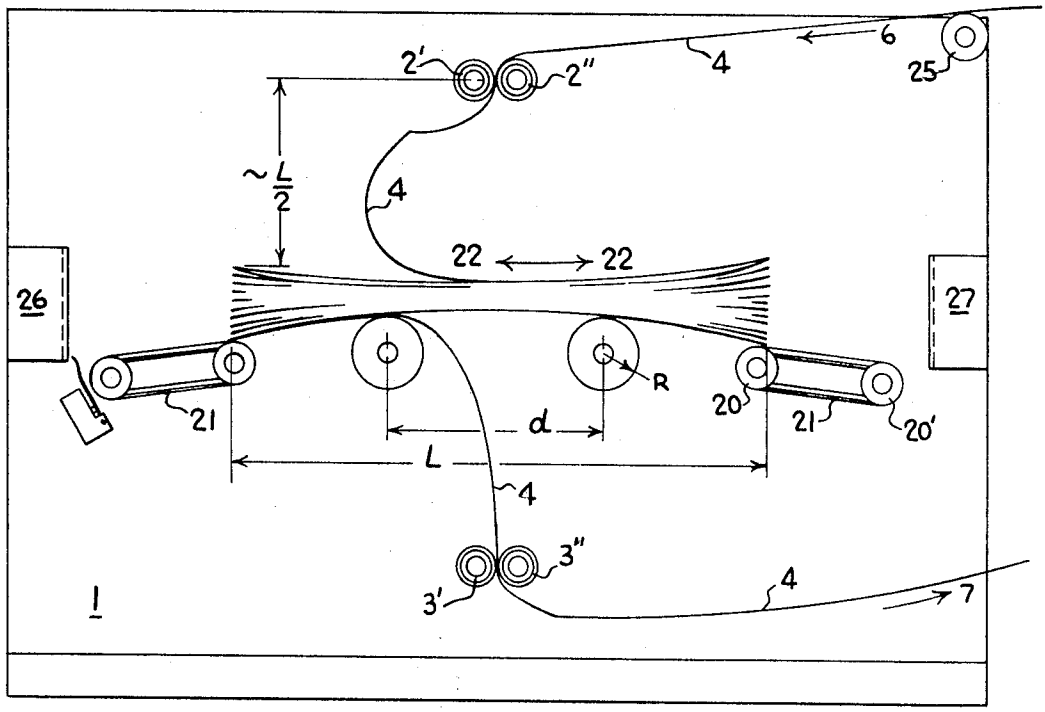
2'
2"
4
6
25
~L/2
4
22 ↔ 22
26
27
21
R
20
21
20'
d
L
4
3"
3'
4
7
1

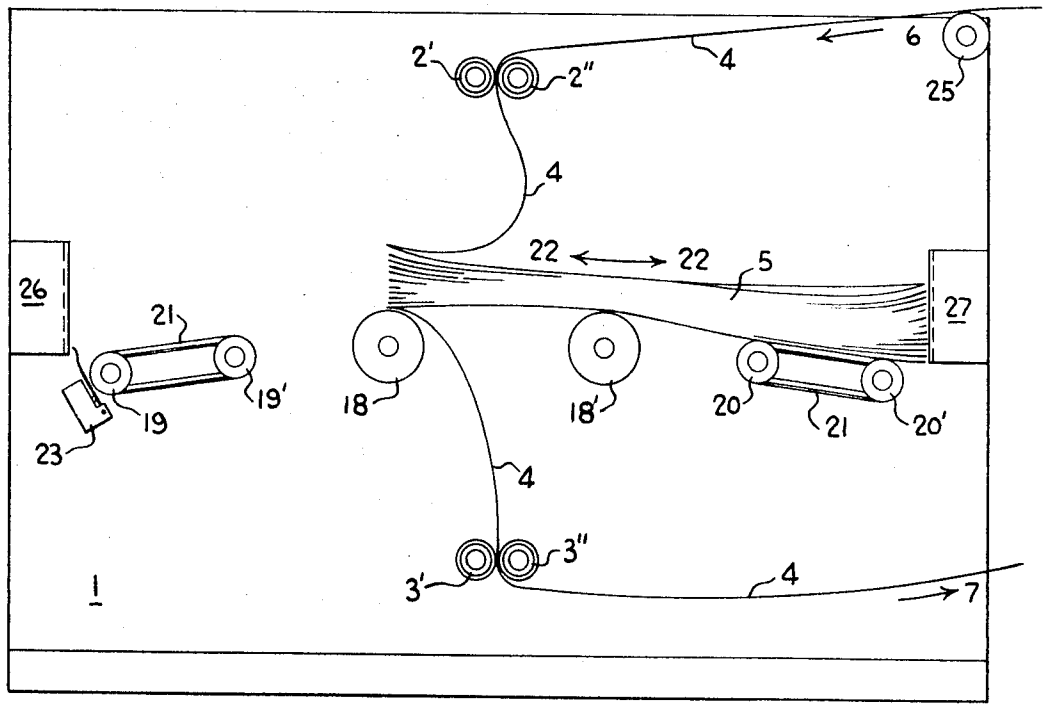
2'
2"
4
6
25
4
22 ↔ 22
5
26
27
21
19'
19
23
18
18'
20
21
20'
4
3"
3'
4
7
1

FIG. 2

FIG. 6

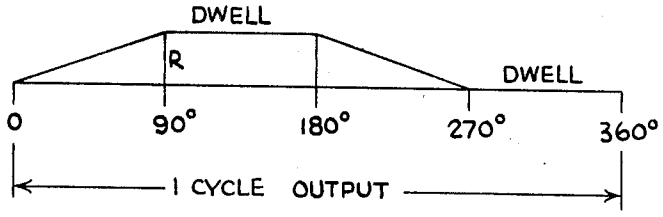

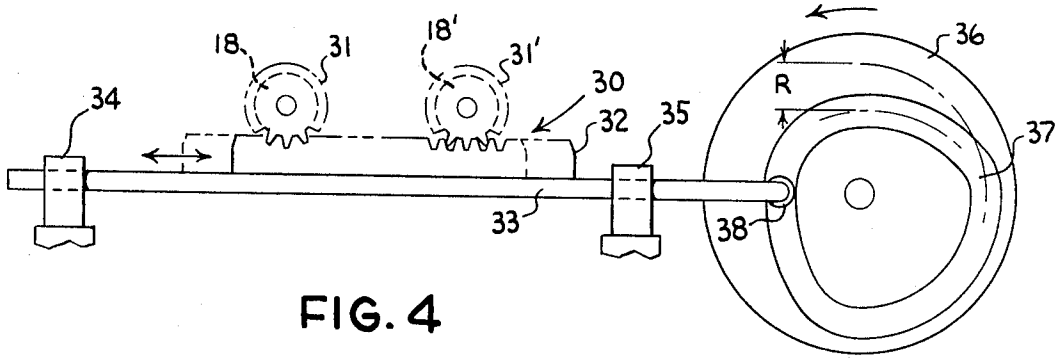

FIG. 4

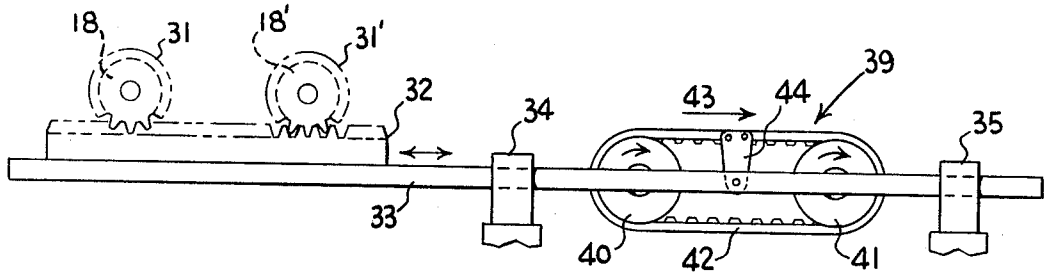

FIG. 5

PHOTO-CONDUCTIVE MATERIAL HANDLING DEVICE

The invention pertains to photoconductive materials and a method and a device for handling them, and more particularly to a method and apparatus for feeding, storing, and dispensing a quantity of flexible, articulated, photoconductive web-like material through a copier system.

The present invention concerns a moving endless belt, whose greater portion is kept stored within a housing, while a smaller portion is run through copier machinery. The subject invention is for particular use in conjunction with a belt of photoconductive material such as zinc oxide, which is being run through a xerographic copier system. The flexible, articulated, photoconductive belt for use in this invention is uniquely fan-folded within its housing, and has discrete sections which are joined at their edges to form an endless web of material. A given amount of the photoconductor is dispensed from the housing in sectioned quantities, and each section undergoes an imaging process generally comprising the steps such as: (a) charging; (b) exposing; (c) developing; (d) transferring; and (e) cleaning; etc. After the transferring and cleaning steps, the photoconductor is returned to the housing.

BACKGROUND OF THE INVENTION

Heretofore, one of the basic problems with certain types of photoconductive materials such as a zinc oxide belt, was that after sections of the belt were exposed to light to form an image thereon, the material would require a certain amount of time in darkness to recover its photoconductive properties. This phenomenon is generally known in the art as allowing the photoconductor to "dark adapt." The relative time required for this recovery is comparatively long with respect to the speed of the copier system. Therefore, it is necessary to have a long expanse of photoconductive material (many sections), whic is cycled through the system. Thus, segmented amounts of the web are serially charged exposed, toned, cleaned, and the serially returned as spent material to a storage area for recovery purposes. While the spent material is allowed to "dark adapt," fresh image receiving segments of photoconductive material are supplied to the copier system to make subsequent copies of original documents. Each segment receives a full document image, and may be made equal to or slightly larger than the document size.

In copier systems demanding frequent use, the stored quantity usually has a large volume. The present invention is for a method of use of a uniquely folded photoconductor and a compact system for storing and dispensing large amounts of this photoconductor.

SUMMARY OF THE INVENTION

The invention uses a flexible, segmented, fan-folded photoconductive web of material, and comprises a method and compact device for allowing the storage and dispensing of a large amount of this photoconductive material through a copier system.

The invention has as one of its novel features, the capability of moving the stored portion of the web as a substantially constant unit mass, while the stored material is continuously changing during operation, to provide ease of dispensing.

Another novel feature of the invention is that the web is stored fan-folded within its housing to provide compactness in storage. The web is folded flat with respect to its support.

Still another novel feature is provided by the reciprocatory translation of the stored mass of material, which motion cooperates with the feeding and dispensing rollers to produce reliable ingress and egress of the web.

This material handling device of the invention comprises means to support a portion of an endless web in compact fashion for storage purposes. Feeding and dispensing means are provided, such as two spaced apart pairs of stationarily positioned-synchronized rollers, for continuously changing the stored material. Because the feed rollers are synchronized with the dispensing rollers, the quantity of stored material remains substantially constant, despite the fact that new material is continuously entering and exiting from the stored mass. The mechanism of the device is such that means are provided to move the stored mass as a unit with respect to the support, or with respect to the feeding and/or dispensing rollers, in conjunction with movement of the material through the stored mass.

The method of the invention comprises dispensing or otherwise propelling, a flexible, photoconductive, segmented, sheet of material from one end of a large stack of fan-folded sections. The web of photoconductor is fed through a series of processing stations. One of the stations is a charging station. Another station is an imaging station, where successive individual segments of the photoconductor are exposed between their fold lines to form a latent image on the sections.

At other processing stations, the individually imaged segments of the photoconductor are developed, and then the developed image is transferred from the photoconductor to a sheet material, such as paper. The belt or web of photoconductor is then generally cleaned and subsequently returned to an opposite end of the stack. The returned photoconductive segments are deposited upon the stack and undergo a storage period to allow the photoconductor to "dark adapt."

It is an object of the invention to provide an improved photoconductive material handling device.

It is another object of this invention to provide a compact and reliable storage and feeding device for handling a quantity of web-like photoconductive material.

It is but another object of the invention to provide a reliable web storage and dispensing device for a unique fan-folded photoconductive web bundle.

It is still another object of this invention to provide an improved method of using a web of photoconductive material to produce copies of an original document.

It is yet another object of this invention to generally subject a photoconductive web of material to the processes of: (a) charging; (b) exposing; (c) developing; (d) transferring; and (e) cleaning; etc.

These and other objects of this invention will become more apparent, and will be better understood, with respect to the following detailed description and accompanying drawings, in which:

FIG. 1 is a perspective view of the inventive device with the web material bundle translated to a first end position;

FIG. 2 is a frontal view of the inventive device of FIG. 1 with the exception that the web material bundle is shown in a second end position reciprocal to that of the first end position;

FIG 3 is a frontal view of the inventive device of FIG. 1 with the web material bundle moving through an intermediary position between the first and second end positions.

FIG. 4 is a side view of a roller drive mechanism for the inventive device of FIG. 1;

FIG. 5 is a side view of an alternate roller drive mechanism for the inventive device of FIG. 1; and

FIG. 6 is a graphical representation of the approximate motion obtained from the roller drive devices shown in FIGS. 4 and 5.

DETAILED DESCRIPTION

Generally speaking, the invention uses a unique fan-folded photoconductor and comprises a material handling device for this web-like photoconductive material. The device comprises a material support for supporting a compactly arranged portion of an endless belt which defines a stored portion. Feed and dispensing means, such as a spaced apart rotating pair of rollers, feed a given quantity of the material towards the stored portion, and dispense a similar quantity from the stored portion. This results in there always being a substantially constant stored mass of material, despite the fact that the material is continuously changing within the stored mass. Means are also provided for moving the stored portion as a unit mass with respect to the supporting means and with respect to either or both of the feeding and dispensing means.

The invention is also for a method of using the aforementioned photoconductive web in a xerographic process, generally comprising the steps such as: (a) charging: (b) exposing; (c) developing; (d) transferring, and (e) cleaning; etc.

Now referring to FIG. 1, a perspective view of the inventive device is shown. A housing or frame **1** is generally shown supporting two pairs of spaced apart rotating rollers **2** and **3**, respectively. The pair of rollers **2** are in pressure contact with each other and have movably disposed between them a portion of the photoconductive web material **4**. The pair of rollers **3** are likewise in pressure contact with each other, and similarly have movably disposed between them another portion of the web material **4**. Between these pairs of rollers **2** and **3** is a stored bundle of a photoconductive fan-folded web of material shown by arrow **5**. The rollers **2** act as feed rollers, which supply the stored bundle **5** with a continuously changing supply of web material. The pair of rollers act as dispensing rollers and continuously draw from said stored bundle **5** a new supply of web material **4**. The ingress and egress of the web **4** from the housing **1** and the bundle **5**, is depicted by arrows **6** and **7**, respectively, and may be aided by supporting guide rollers, such as roller **25**.

The rollers **2** are driven through a pulley system by a constant speed motor **8**. The motor **8** powers pulley **9**. A belt **10** is positioned over pulley **9** and a pulley **11**, so that pulley **11** will be made to turn when pulley **9** is made to turn. Pulley **11** is connected to one of the rollers **2'** of roller pair **2** by shaft **12**. Since the roller **2'** is made to rotate by motor **8**, the other roller **2''** of the roller pair which is in pressure contact with the first roller **2'** will likewise rotate, causing the interdisposed web material **4** to be drawn into the housing **1**.

The belt **10** is a timing belt, so that no slippage occurs between the pulleys **9** and **11**, respectively.

The dispensing rollers **3** are powered by motor **8** through the aforementioned pulley system, and a chain-and-sprocket drive generally shown by arrow **14**. Sprocket **15** is connected to shaft **12** as is the roller **2'**. A timing chain picks up the rotation of shaft **12** and sprocket **15**, and transmits it to sprocket **16** which is connected to roller **3'** of the roller pair **3** by means of shaft **17**. Similar to the roller pair **2**, the dispensing rollers **3** are in pressure contact, so that when roller **3'** rotates, its mating roller **3''** also rotates. Rollers **2** and **3**, respectively, synchronously turn in the same direction, so that the web of material **4** leaving bundle **5**, and interdisposed between rollers **3'** and **3''**, is made to exit from the housing as shown.

Bundle **5** is supported within the housing **1** by three pairs of supporting rollers **18, 18'**; **19, 19'**; and **20, 20'** journalled in the housing. The bundle of web material **5** is made to reciprocally translate as shown by arrows **22** with respect to housing **1**, and also with respect to either pair of stationarily supported feed rollers **2** and **3**.

OPERATION OF THE DEVICE

The operation of the device will be explained with reference to FIGS. **1** through **3**. Like operative elements of FIGS. **2** and **3** have the same designations as those of FIG. **1**.

Photoconductive bundle **5** is fan-folded, and is supported as aforementioned by rollers **18, 18'**; **19, 19'**; and **20, 20'**, which are journalled in the housing. The middle pair of rollers **18** and **18'** are rotatively supported by the housing, and are made to turn as the bundle **5** moves back and forth over them from one end of the housing to the other end. Guide positions **26** and **27**, respectively, define the end positions of the bundle travel. The end rollers **19, 19'** and **20, 20'**, respectively are also free to rotate so as to reduce friction of the bundle moving over them, but are primarily functional only as supporting members as the bundle approaches and attains the end positions. Each of the end rollers **19, 19'** and **20, 20'**, respectively, have several belt members **21** stretched across them (see FIG. **1**, right-hand side). These belts **21** are spaced periodically along the length of the rollers. The function of the belts is to prevent the bundle **5** from slipping between either of the supportive roller pairs as it moves toward the end of its translatory travel.

The illustrated device is considered merely as an exemplary embodiment of the invention for the purposes of explanation. Consequently, it is considered that roller pairs **19, 19'** and **20, 20'** may be replaced by flat frictionless surfaces or an equivalent pair of smooth supporting guide members.

The photoconductive fan-folded bundle **5** is made to reciprocally translate as a unit mass across the housing between end guides **26** and **27** as shown by arrows **22**. It is important to maintain the proper clearance distance between guides **26** and **27**, and the rollers **18** and **18'**, respectively, so that when the bundle **5** has reached its end position, a new sheet can be easily withdrawn past roller **18** and **18'**, as the case may be. If the end travel distance is too short, the end of the sheet will be pinched between the bundle and the roller making withdrawal of the sheet difficult, and if this end travel distance is too long, one end of the bundle will not be provided with support by roller **18** or **18'**. The translatory motion is primarily the result of the tension pro-

vided upon the web by the dispensing rollers **3**, which when pulling a single fan-fold from said stack (bundle **5**) of fan-folded elements, causes the stack to shift upon the rollers **18** and **18'**. It is to be realized, however, that the desired reciprocation and sheet separation is also dependent upon the radius "R" of the rollers **18** and **18'**, the distance "*d*" between the centers of the rollers **18** and **18'**, and the thickness of the photoconductive sheet (FIG. **3**). It has been found that for a stack of approximately 50 sheets of Mylar-backed photoconductor of approximately 5 mils thickness, having a length "*L*" of 10 inches, *R* is 0.75 inches and *d* is 4 inches. In otherwords, the Ratio of *d*/*R* is equal to 5.3. The ratio of *d*/*R* is influenced by the stiffness of the web material. The height from the top of the bundle to the feed rollers should be approximately equal to *L*/2, or half the bundle length. The length of the loop extending outwardly into the copier from the top and bottom of the bundle **5**, should approximate an even multiple of the length "*L*" of the bundle in order to achieve proper folding of the stack.

Likewise, it has been found, that for a large weighted quantity of stored material **5**, the tension in the dispensing rollers **3** may not be sufficient to overcome inertial and frictional effects to provide reciprocation. Also, the material itself may be too weak to sustain the required tension without ripping or otherwise becoming damaged. Therefore, it may be necessary in some instances to power drive the rollers **18** and **18'**. FIGS. **4** and **5** show two mechanical embodiments that can be used to power rollers **18** and **18'**. FIG. **6** is a graph of the approximate motion provided by these devices.

Referring to FIGS. **4** and **5**, a rack and pinion drive system is generally shown by arrow **30**. The pinion gears **31** and **31'**, are respectively connected to rollers **18** and **18'** of FIGS. **1–3**. The rack **32** drives pinion gears **31** and **31'** by means of push rod **33**, which is movably supported by supports **34** and **35**, respectively.

In FIG. **4**, the push rod **33** is reciprocally driven by rotating cam **36** having an internal track **37**. A follower **38** connected to the push rod **33** moves in track **37** as the cam **36** rotates.

The movement of the push rod **33** is approximately shown in the graph of FIG. **6**.

Similarly, the push rod **33** of FIG. **5** also obtains the above motion but is driven by the chain and roller system shown generally by arrow **39**. The chain and roller system **39** comprises two rotating pulleys **40** and **41**, respectively. A timing belt **42** is wrapped about the pulleys and moves in the direction shown by arrow **43**. A connective link **44** is rigidly attached to the belt **42** and pivotably attached to the push rod **33** at opposite ends thereof.

The device of FIG. **1** may be provided with a register **24** to record the number of cycles of the bundle **5**. A limit switch **23** disposed at one end position of the translatory travel of the bundle **5** can be used to trigger the register **24**.

It should be mentioned, that the drive system for the rollers **18** and **18'** must of necessity be in synchronism with the feeding and dispensing apparatus.

As regards copier systems, the present invention can be used with all kinds of photoconductive materials capable of being made into, or forming part of a web.

The illustrations disclosed herein are deemed to be exemplary, and only or the purpose of explanation. The full spirit and scope of the invention should be construed with respect to the appended claims, irrespective of any obvious modifications which can be made by those skilled in the art.

What is claimed is:

1. A xerographic plate handling device for a copier system, said handling device being operative to store and dispense an endless belt supporting a photoconductive material, said device comprising:

means for supporting a first given quantity of said belt in a substantially flat fan-folded array, said supporting means having at least one rotatable supportive member adapted to support said array;

means operatively associated with said supporting means for feeding a second quantity of said belt through a copier system for the purpose of making copies of an original document, said second quantity of said belt arranged in an endless loop with said first quantity of material, said means also causing reciprocal movement of said fan-folded array as a unit mass with respect to said supporting means; and

means for rotatively driving said supportive member so as to facilitate said reciprocal movement of said fan-folded array as a unit mass with respect to said support means.

2. The xerographic plate handling device of claim **1**, wherein said supporting means comprises a pair of spaced apart rotatable supportive rollers which are rotatively driven by said driving means.

3. The xerographic plate handling device of claim **1**, wherein said driving means is substantially in synchronism with said feeding means.

4. A xerographic plate handling device for a copier system, said handling device being operative to store and dispense an endless belt supporting a photoconductive material, said device comprising:

at least one rotative supporting member for supporting a belt arranged in a fan-folded stack for reciprocal movement thereon;

a first feeding means operatively associated with said supporting member for feeding a given quantity of said belt into said stack;

second feeding means operatively associated with said supporting member for feeding a similar given quantity of said belt from said stack, such that the stack remains substantially constant in mass during the feeding of said stack, and wherein said second feeding means causes reciprocal movement of said fan-folded stack as a unit mass with respect to said supporting member; and

driving means operatively associated with said supporting member for rotatively driving said rotative supporting member to facilitate the feeding and dispensing of said belt into and out of said stack.

5. The xerographic plate handling device of claim **4**, wherein said first and second feeding means each comprise a pair of rotatable feed rollers, each pair of feed rollers oppositely disposed from each other, and disposed at an opposite side of said stack, said first and second feed rollers being rotatively operative in substantial synchronism with each other, so as to maintain a substantial constant mass of material in said stack.

6. The xerographic plate handling device of claim **5**, wherein there are two rotative supporting members comprising a pair of supporting rollers, said supporting rollers being substantially driven in synchronism with the rollers of the first and second feeding means.

* * * * *